DEPARTMENT OF THE ARMY
NEW YORK DISTRICT, CORPS OF ENGINEERS
JACOB K. JAVITS FEDERAL BUILDING
NEW YORK, N.Y. 10278-0090

REPLY TO
ATTENTION OF

Notice of Availability of Draft Environmental Assessment

The U.S. Army Corps of Engineers, New York District (District) announces the availability of the *Draft Environmental Assessment for the Bartlett Brook Stormwater Management, City of South Burlington, Chittenden County, VT* (DEA).

The District is proposing to implement multiple stormwater management measures in the Laurel Hill and Stonehedge neighborhoods of South Burlington, Chittenden County, Vermont.

The DEA will be posted on the U.S. Army Corps of Engineers, New York District's website: http://www.nan.usace.army.mil/

For further project information contact: Rifat Salim
Project Manager
New York District Corps of Engineers
(917) 790-8215
Rifat.Salim@usace.army.mil

To request a copy of the Draft Environmental Assessment and submit written comments, contact:
Kimberly Rightler
Project Biologist
New York District Corps of Engineers
Attn: CENAN-PL-E
26 Federal Plaza
New York, NY 10278-0090
(917) 790-8722
kimberly.a.rightler@usace.army.mil

Comments received **by 2 September 2015** regarding the DEA will assist in the agency's evaluation of the project changes and will be reflected in the project record.

ENVIRONMENTAL ASSESSMENT

Bartlett Brook
Stormwater Management
City of South Burlington, VT

August 2015

Prepared By:

US Army Corps of Engineers
New York District

Draft Environmental Assessment,
Bartlett Brook Storm Water Management
City of South Burlington, VT

Table of Contents

1.0 Purpose and Need 1
2.0 Project Background.....3
3.0 Alternatives Analysis 3
3.1 No Federal Action.....3
3.2 Selected Plan for the Stonehedge and Laurel Hill Project Areas.....4
4.0Affected Environment.....5
4.1 Land Use 5
4.2 Topography and Soils 6
4.3 Water Resources 7
4.4Vegetation 8
4.4.1 Wetlands 8
4.5 Fish and Wildlife.....11
4.6 Threatened and Endangered Species 12
4.7 Socioeconomics 12
4.8 Cultural Resources 13
4.9 Hazardous, Toxic, and Radioactive Waste 14
4.10 Recreation 14
4.11 Air Quality 14
5.0 Environmental Affects of Alternatives 14
5.1 Land Use 14
5.2 Topography and Soils 15
5.3 Water Resources 15
5.4 Vegetation 15
5.4.1 Wetlands 16
5.5 Fish and Wildlife.....18
5.6 Threatened and Endangered Species 18
5.7 Socioeconomics 18
5.8 Cultural Resources 19
5.9 Hazardous, Toxic and Radioactive Waste (HTRW).....19
5.10 Recreation 19
5.11 Air Quality and Noise 19
5.12 Cumulative Impacts 20
6.0 Coordination 20
7.0 Conclusion 23
8.0 References.....23
9.0 List of Preparers.....24

Figures

Figure 1: Stonehedge and Laurel Hill Project Areas 2

Tables

Table 1: Summary of Primary Federal and State Laws and Regulations Applicable to the Proposed Project.....21

Appendices:

Appendix A - Section 404(b)(1) Evaluation
Appendix B - Design Plans
Appendix C - Pertinent Correspondence
Appendix D – Draft Finding of No Significant Impact

LIST OF ACRONYMS

Acronym	Title
APE	Area of Potential Effect
CEQ	Council of Environmental Quality
CFR	Code of Federal Regulation
cfs	Cubic feet per second
Corps	Army Corps of Engineers
DEA	Draft Environmental Assessment
District	United States Army Corps of Engineers, New York District
EPA	United States Environmental Protection Agency
HTRW	Hazardous, Toxic and Radioactive Waste
NAAQS	National Ambient Air Quality Standards
NEPA	National Environmental Policy Act
NHPA	National Historic Preservation Act, as amended
NRHP	National Register of Historic Places
NRCS	Natural Resource Conservation Service
LCBP	Lake Champlain Basin Program
PPA	Project Partnership Agreement
SHPO	State Historic Preservation Office
TMDL	Total Management Daily Load
U.S.C.	United States Code
USFWS	United States Fish and Wildlife Service
VANR	Vermont Agency of Natural Resources
VDHP	Vermont Division of Historic Preservation
VEIL	Vermont Environmental Inventory Mapper
VSWI	Vermont Significant Wetland Inventory
WRDA	Water Resources Development Act

1.0 Purpose and Need

The US Army Corps of Engineers (Corps), New York District (District), in partnership with the City of South Burlington (South Burlington), is proposing to implement multiple stormwater management measures in the Laurel Hill and Stonehedge neighborhoods of South Burlington, Chittenden County, Vermont (Figure 1).

The proposed project is situated within the Potash and Bartlett Brook watersheds. Both the Potash and Bartlett Brooks are tributaries to Lake Champlain and have been listed on the Vermont 303(d) list of impaired waters since 2004 and 2006, respectively, due to impacts from unmanaged stormwater runoff. The purpose of the project is to improve water quality through the removal of pollutants and the reduction of peak flows that cause channel erosion, which is associated with significant sediment and phosphorous loads.

In addition, both neighborhoods experience regular flooding and drainage issues related to the uncontrolled stormwater runoff. Therefore, a secondary benefit associated with the proposed project will be a reduction in nuisance flooding associated with stormwater runoff.

The proposed project has been authorized under Section 542 of the Water Resources Development Act of 2000 (WRDA). Section 542 of WRDA 2000 authorizes the Secretary of the Army to establish a program for providing environmental assistance to non-Federal interests in the Lake Champlain Watershed. It defines the Lake Champlain Watershed as the land areas within Addison, Bennington, Caledonia, Chittenden, Franklin, Grand Isle, Lamoille, Orange, Orleans, Rutland, and Washington Counties in the State of Vermont; the land areas that drain into Lake Champlain and that are located within Essex, Clinton, Franklin, Warren, and Washington Counties in the State of New York; and the near-shore areas of Lake Champlain within the counties referred to in New York.

This Environmental Assessment (EA) is being prepared in accordance with the National Environmental Policy Act (NEPA) to evaluate the significance of potential environmental, socio-economic and cultural resource impacts of the proposed action and to determine if the proposed action warrants the preparation of an environmental impact statement.

Figure 1: Stonehedge and Laurel Hill Project Areas

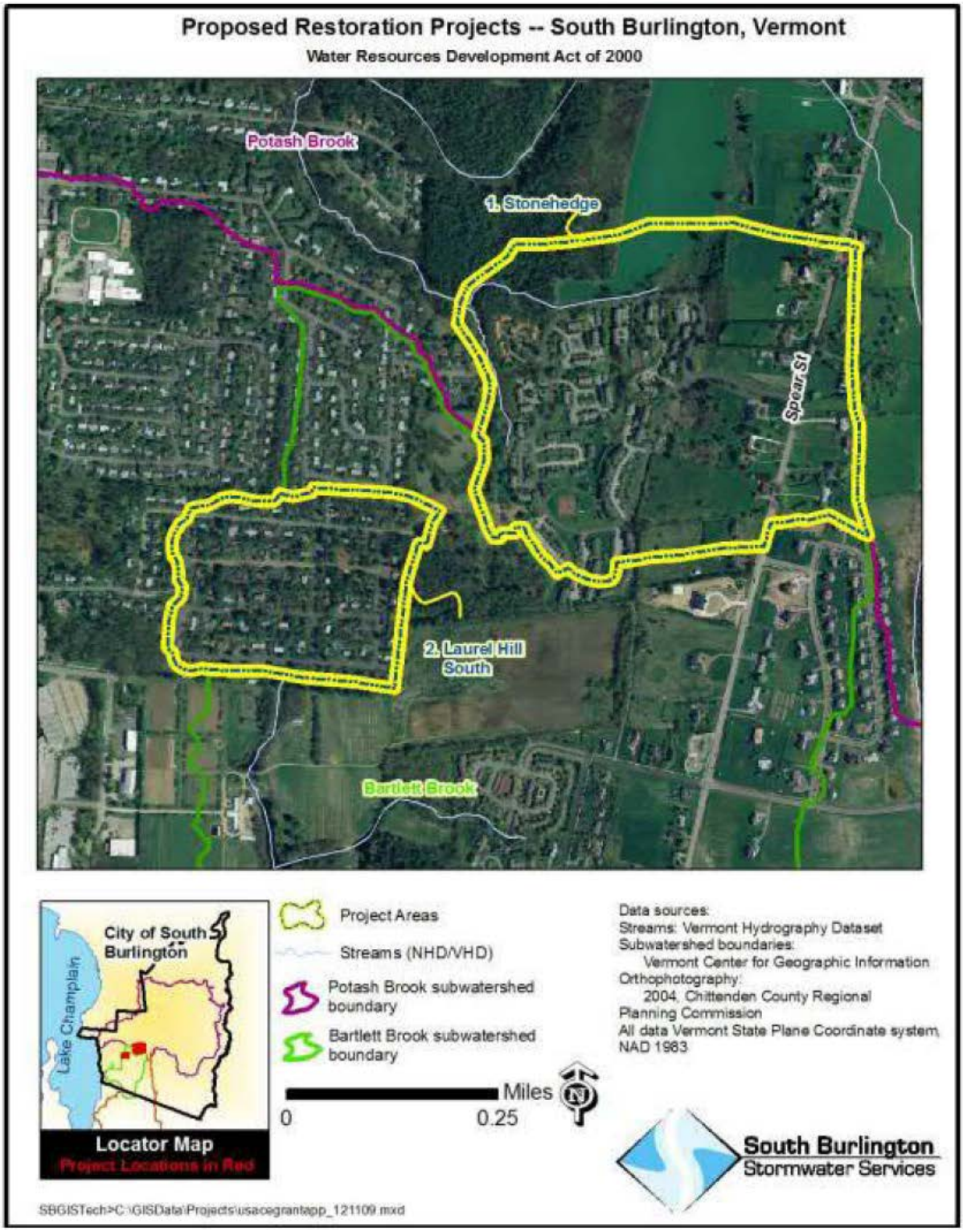

2.0 Project Background

South Burlington initially conducted two separate studies in 2007 that resulted in the development of conceptual stormwater improvement plans for the Stonehedge and Laurel Hill neighborhoods. The conceptual plan for the Stonehedge neighborhood included improved drainage swales/grass channels, four bioretention areas, an infiltration trench, two stormwater detention ponds and closed drainage system improvements (Lamoureux & Dickinson Consulting Engineers, Inc, 2007).

The conceptual plan for the Laurel Hill neighborhood included increasing the size of the existing storm drain pipes under Sebring Road and between Andrews Avenue and Sebring Road, and an installation of an underground pipe infiltration system on Deborah Drive to retain and slowly release collected stormwater runoff into the ground (Hoyle, Tanner & Associates, 2007).

The results of both 2007 studies served as the basis for the Project Partnership Agreement (PPA) between South Burlington and the District to complete plan designs and construct both projects. The PPA was executed in 2012.

3.0 Alternatives Analysis

South Burlington conducted an extensive alternative analysis during the development of each of the conceptual plans for both projects in 2007. The alternative analysis for each of the plans are documented in the in the *Stonehedge Stormwater Study Final Report, South Burlington, Vermont, November 2007* (Lamoureux & Dickinson Consulting Engineers, Inc., 2007) and the *City of South Burlington, Laurel Hill South Neighborhood Flood Mitigation Alternatives Investigation Report, October 19, 2007* (Hoyle, Tanner & Associates, 2007), respectively.

Therefore, for the purposes of this Environmental Assessment, the alternative analysis includes No-Action and the Selected Alternative. The alternatives were evaluated for consistency with both the Federal objective and desires of the community. The alternative that best met the economic, environmental and technical criteria for this project site was selected as the proposed project. Criteria used in selecting the preferred alternative include:

- Reduce stormwater pollution and quantity;
- Provide an environmentally beneficial solution;
- Constructability;
- Aesthetically pleasing;
- Acceptability to residents; and
- Cost

3.1 No Federal Action

Analysis of the No-Action Alternative is prescribed by the National Environmental Policy Act and serves as a baseline against which the environmental and socioeconomic impacts of the proposed project and other reasonable alternatives can be evaluated.

Under the No-Action Alternative, stormwater runoff from both the Stonehedge and Laurel Hill neighborhoods will continue to contribute pollutants, nutrients such as phosphorus, and sediment into Potash Brook and Bartlett Brooks and ultimately into Lake Champlain. Results of such continued contributions include sustained aquatic habitat and water quality degradation.

3.2 Selected Plan for the Stonehedge and Laurel Hill Project Areas

The selected plan for the Stonehedge neighborhood consists of the following:

a) Improved drainage swale: A stone lined swale will be installed along the eastern/southeastern edge of the neighborhood to intercept off-site runoff from the east and from portions of Stonehedge Drive. A new box culvert will span this swale to allow continued access to an upgradient parking area.

b) Bioretention Areas: Three bioretention areas ranging from 6,300 square feet to 8,300 square feet in size will be constructed. Each of the bioretention area has been designed in accordance with the State of Vermont Stormwater Management Manual. The fourth bioretention area proposed in the northwestern portion of the neighborhood in the 2007 conceptual plan was eliminated as it would require extensive grading of the surrounding parking areas to facilitate drainage into the bioretention area, and the presence of underground utilities. Though a detailed cost-benefit analysis was not conducted, a cursory analysis indicated that benefits of this bioretention area would be insufficient to justify the expected cost of construction.

c) Stormwater Detention Pond: A stormwater detention pond consisting of a treatment forebay followed by a wet pond with a controlled outlet will be constructed on the western edge of the development and partially within the Syzmanksi park. An effort was made to relocate the stormwater detention pond further out of the existing wetlands to minimize impacts to the wetland, but due to a sanitary sewer line, was determined to be infeasible.

   A second stormwater detention pond along the southernmost portion of the neighborhood was proposed in the 2007 conceptual plans. While the detention pond appeared feasible at the conceptual level, it was determined during the design phase that space constraints made constructing a pond at this location impractical. Further, because outflow from this pond would be directly discharged into the stormwater detention pond on the southwest side of the neighborhood, the benefits were considered to be questionable.

d) Closed Drainage System Improvements: The existing closed drainage system at the intersection of Cedar Glen Drive and Stonehedge Drive will be upgraded to more effectively intercept off-site drainage and to route it to the new stone lined swale.

Improvements include the replacement of two lengths of 12" pipe with 18" HDPE pipe, the replacement of three existing catch basins, and the addition of a new fourth catch basin. An additional closed drainage system will be added to convey stormwater in a generally southerly direction from the downstream end of the new swale to the stormwater detention pond.

The plan also includes the reconstruction and repaving of a portion of the intersection of Cedar Glen and Stonehedge Drives in order to ensure a roadway crown that delivers water to the new and existing catch basins (see Appendix B for plan sheets).

The infiltration trench proposed in the 2007 conceptual plan was eliminated because the limited drainage provided relatively little benefit in terms of overall water treatment and control. Further, there was concern that infiltrating water into the ground up gradient of an adjacent building would cause or contribute to additional basement flooding problems.

The selected plan for the Laurel Hill neighborhood includes the replacement of existing pipes under Sebring Road and existing storm drain pipes between Andrews Avenue and Sebring Road with those that have a larger hydraulic capacity (see Appendix B for plan sheets). To minimize conflicts with existing utilities, the proposed horizontal alignment follows the existing horizontal and vertical alignment. Due to issues with a high groundwater table, the infiltration system on Deborah Drive originally proposed in the 2007 conceptual plan was removed.

Locations that South Burlington has identified to potentially serve as staging areas during construction of both project components include the east end of Sebring Road, a portion of Szymanski Park southwest of the basketball court, or a portion of the Szymanski Park parking lot at the eastern end of Andrews Avenue.

4.0 Affected Environment

4.1 Land Use

Stonehedge Project Area

The Stonehedge neighborhood was constructed in the 1980s and is comprised of 202 condominium units. The neighborhood is bounded on the southwest by the William Szymanski Park, the University of Vermont Horticultural Farm to the south, a combination of forest and agricultural fields on the north and by single family residences on two or more acre lots to the east.

Laurel Hill Project Area

The Laurel Hill neighborhood consists of approximately 140 single family homes on lots approximately 1/3 acres in size that were constructed approximately 40 years ago. The neighborhood is bounded by the University of Vermont Horticultural Farm to the south and east, and single family homes of similar lot size to the north and west.

4.2 Topography and Soils

Stonehedge Project Area

The Stonehedge neighborhood is located on a westerly-trending slope, averaging approximately 8% between elevations 260 feet and 340 feet. Dominant soils within the Project Area include the Duane and Deerfield complex 0 to 5 percent and 5 to 12 percent slopes, Adams and Windsor loamy sands from 5 to 12 percent slopes.

The Duane and Deerfield group are undifferentiated meaning that any given area may consist of Duane soils, Deerfield soils, or soils of both series. Both the Duane and Deerfield series are derived from a sand and gravelly glaciofluvial deposits parent material and are generally located on terrace landforms. They are moderately well drained and are not frequently ponded or flooded and occur on slopes ranging from 0 to 5 percent (USDA 1989).

The Adams and Windsor loamy sands complex are formed in glaciofluvial or glaciolacustrine sands on outwash plains, lake plains, and terraces. The Adams soil series is very deep to bedrock and somewhat excessively drained. The Windsor soil series is very deep to bedrock and excessively drained.

The Scarboro soil series consists of very deep, very poorly drained soils derived from sandy glaciofluvial deposits. They are typically located in level or nearly level depressions on outwash plains, deltas and terraces (NRCS 2010).

Laurel Hill Project Area

The topography within the Laurel Hill neighborhood is relatively flat, averaging 1% and located on elevations ranging from 22 feet to 240 feet. Dominant soils within the Laurel Hill neighborhood include Adams and Windsor loamy sands, 0 to 5 percent and 5 to 12 percent slopes (not hydric) and Scarboro loam.

Scarboro loam soils are designated as partially hydric. Soils with this classification are those saturated through natural or artificial means sufficiently enough to support the growth and regeneration of hydrophytic vegetation (NRCS 2007).

Vermont's laws regarding land use and development includes designation of certain soils, known as "Primary Agricultural Soils", that are characteristic of arable lands. Specifically, primary agricultural soils are those "soil map units with the best combination of physical and chemical characteristics that have a potential of growing food, feed and forage crops, have sufficient moisture and drainage, plant nutrients or responsiveness to fertilizers, few limitations for cultivation or limitations which may be easily overcome and an average slope that does not exceed 15 percent.

Present uses of soils designated as "Primary Agricultural Soils" may include cropland, pasture, regenerating forests, forestland, or other agricultural or silviculture uses. However, the soils must be of a size and location, relative to adjoining land uses, so that those soils will be capable, following removal of any identified limitations, of supporting or contributing to an economic or

commercial agricultural operation. Unless contradicted by the qualifications stated in this subdivision, primary agricultural soils shall include important farmland soils map units with a rating of prime, statewide, or local importance as defined by Natural Resource Conservation Service (NRCS)" (NRCS 2006).

Based on a review of the NRCS soil survey, and the Deerfield and Duane soil complex are considered of statewide importance thus meeting the primary agricultural soils definition.

4.3 Water Resources

The majority of drainage flowing through the Stonehedge neighborhood is located within the Potash Brook Watershed, with the exception of a small portion at the southern end of the neighborhood that drains into a tributary of Bartlett Brook. An ephemeral tributary to Potash Brook that flows in a northerly direction is located along the northwestern boundary of the Stonehedge neighborhood.

Potash Brook and its associated tributaries are designated as Class B (VTDEC 2006). In general, Class B waters support: 1. High quality aquatic habitat; 2. Good aesthetic value; 3. Public water supply with filtration and disinfection; 4. Irrigation of crops without treatment for human consumption without cooking; 5. Swimming and other primary contact recreation; and 6. Boating, fishing and other recreational uses (VT WRP 2008).

The Laurel Hill neighborhood is entirely located within the Bartlett Brook Watershed. Within the neighborhood, streamflow from a segment of Bartlett Brook enters the existing drainage network on the east end of the neighborhood at the terminus of Sebring Road and commingles with stormwater runoff from the neighborhood.

Bartlett Brook is a small, moderate gradient stream that drains a watershed of 736 acres and discharges into Lake Champlain. The headwaters begin upstream along the eastern boundary of the University of Vermont horticulture farm. Several small tributaries enter the main branch as the stream runs through a forested section of land located west of the Laurel Hill neighborhood. Bartlett Brook and its tributaries are designated as Class B waters and as cold water fish habitat (VTDEC 2007).

Both the Potash and Bartlett Brooks are identified on the Vermont 303(d) list as a stormwater impaired watershed. Briefly, the 303(d) list is an inventory of waters, which under the Clean Water Act states must submit to the Environmental Protection Agency (EPA), where typical pollution controls are insufficient to attain or maintain applicable water quality standards. As part of the 303(d) list, the state will develop Total Management Daily Loads (TMDL), or the maximum amount of pollution that a water body can receive and still meet water quality standards. The state will then develop a long term plan that outlines how to complete the TMDL.

4.4 Vegetation

Stonehedge Project Area

The Stonehedge neighborhood consists of dense residential development, with mown lawns and shade trees, including black willow (*Salix* nigra) and weeping willows (*Salix*), white pine (*Pinus strobus*), quaking aspen (*Populus tremuloides*) and cottonwood (*Populus sp)* (DuBois and King, 2011).

Laurel Hill Project Area

Similar to the Stonehedge neighborhood, the Laurel Hill neighborhood consists of dense residential development with mown lawns and shade and ornamental trees, including hemlock (*Tsuga*), maple (*Acer*), oak (*Quercus*), and apple (*Rosacea*) (DuBois and King, 2011).

4.4.1 Wetlands

Federal (33 CFR 328.3(b); EO 11990) and State (Vt. Code R. 12 004 056) definitions of wetlands are similar, identifying wetlands as "those areas that are inundated or saturated by surface or groundwater at a frequency and duration sufficient to support, and that under normal circumstances do support, a prevalence of vegetation typically adapted for life in saturated soil conditions." As defined above, wetlands generally include swamps, marshes, bogs, and similar areas. Both the federal and state wetland delineation methods require the identification of three parameters to confirm the presence of wetlands; hydric soils, hydrophytic vegetation, and wetland hydrology. All three parameters must be present for an area to qualify as a wetland under this method.

Vermont Wetland Rules further identifies ten functions and values that wetlands provide, classifies wetlands as Class I, II or III and establishes buffer zones; 100 feet for Class I wetlands and 50 feet for Class II wetlands. Class I and II wetlands are considered significant enough to warrant protection under the wetland rules. The ten functions of wetlands functions and values established by the Vermont Wetland Rules include wildlife habitat, fish habitat, recreation and economics, open space and aesthetics, storm and flood storage, endangered and rare species, exemplary community, education and research, erosion control and water quality protection.

A wetland delineation was performed in the Stonehedge and Laurel Hill neighborhoods in 2010. As part of the wetland delineation, Vermont Significant Wetland Inventory maps were reviewed and a cursory assessment of the functions and values of each wetland identified was conducted. Locations of the wetlands within the Stonehedge and Laurel Hill Project Areas can be found on Sheet C-101 of each set of the project plans located in Appendix B.

Stonehedge Project Area

A total of eight wetlands were identified in the Stonehedge neighborhood during the wetland delineation conducted in 2010.

Wetland "A" is approximately 0.20 acres in size and occurs along a man-made ditch, but widens out into mowed lawn areas and a small wooded area at the southwestern end of the

neighborhood. A length of man-made ditch in otherwise upland separates the lower and upper lobes of this wetland. It is primarily herbaceous, with cattails (*Typha*), lurid sedge (*Carex lurdia*), boneset (*Eupatorium perfoliatum*), vervain (*Verbena*), dark-green bulrush (*Scirpus atrovirens*) and purple loosestrife (*Lythrum salicaria*) common along the associated ditchline, with rush species, umbrella sedge (*Cyperus*) and bentgrass (*Agrostis*) in the lawn areas, and with graystem dogwood (*Cornus sericea*) and sensitive fern (*Onoclea sensibilis*) in the wooded area.

The principal valuable functions of Wetland "A" include groundwater discharge, sediment/toxicant retention and nutrient removal/retention/transformation.

Wetland "B" is approximately 0.13 acres in size and occurs in a small draw between garages and Stonehedge Drive. It is forested at the upper end, dominated by black willow, cottonwood, grey birch (*Betula populifolia*), and shrubby willow (*Salix spp.*), and primarily herbaceous at the lower end, dominated by giant reed (*Arundo donax*).

The principal valuable functions of Wetland "B" include groundwater discharge, sediment/toxicant retention and nutrient removal/retention/ transformation.

Wetland "C" is located within the headwaters of the ephemeral Potash tributary along the western boundary of the Stonehedge neighborhood and receives flows from both wetlands A and B. Wetland "C" is approximately 1.05 acres in size and was previously disturbed by the installation of utilities and a sediment stormwater detention pond during the development of the neighborhood. The wetland is comprised of both forested and herbaceous wetland types with the forested portion being located in the northern portion and southwestern edge of the wetland complex and the herbaceous wetland type located in the southern portion of the wetland complex within the footprint of the original sediment pond.

Vegetation observed in Wetland "C" include box elder (*Acer negundo*), grey-stem dogwood black willow, sensitive fern, jewelweed (*Impatiens capensis*), giant reed, Joe-pye weed (*Eutrochium purpureum*), purple loosestrife, and sedges.

The principal functions of Wetland "C" include groundwater discharge, floodflow alteration, sediment/toxicant retention and nutrient removal/retention/ transformation and sediment-shoreline stabilization.

Wetland "D" is approximately 0.65 acres in size and is located in the southwestern corner of the neighborhood. The wetland receives the outflow from a drainage ditch along the southern property line. It is forested, with common wetland species including cottonwood, elm (*Ulmus*), box elder, graystem dogwood, grey birch, glossy buckthorn (*Frangula alnus*), sensitive fern and jewelweed.

The principal valuable functions of Wetland "D" include sediment/toxicant retention and nutrient removal/retention/ transformation.

Wetland "E" is located within the northwest portion of the neighborhood along steep-sided ravine, with woody vegetation such as cottonwood along the edges and herbaceous vegetation such as jewelweed in the center.

Wetland "E" does not appear to be contiguous to any mapped Vermont Significant Wetland Inventory (VSWI) wetland, but may be determined to be Class II under the Vermont Wetland Rules due to its characteristics and functions and values.

The principal valuable functions of Wetland "E" include groundwater discharge, sediment/ toxicant retention, nutrient removal/ retention/ transformation and sediment-shoreline stabilization. To the west of the neighborhood, the wetland connects to a wet meadow along a north flowing ephemeral stream.

Wetland "F" is approximately 0.21 acres in size. It is located at the sharp curve of a drainage swale between housing clusters B and H, and continues along the swale in a narrow band from five to 20' wide for another 320' to the southwest. It is forested along the edges, with scrub-shrub and emergent components distant to the drainageway. Common wetland species include black willow, cottonwood, grey birch, graystem dogwood, jewelweed, reed canary grass (*Phalaris arundinacea*) and cattails.

The principal valuable functions of Wetland "F" include groundwater discharge, sediment/ toxicant retention, nutrient removal/ retention/ transformation and sediment-shoreline stabilization.

Wetland "G" is approximately 0.07 acres in size and appears to be contiguous to a mapped Class II VSWI wetland to its northwest. It is primarily emergent, with some wooded wetland along its edges, and is located in a ravine with a three-foot wide stream which extends northwesterly to an emergent wetland along a larger stream. The wetland is dominated by jewelweed and sensitive fern, with some yellow birch (*Betula* alleghaniensis) along the edges.

The principal valuable functions of Wetland "G" include groundwater discharge, sediment/ toxicant retention, nutrient removal/ retention/ transformation and sediment-shoreline stabilization.

Wetland "H" is approximately 0.17 acres in size and does not appear to be contiguous to a Class II VSWI mapped wetland to the east. This wetland is located in a small basin between a berm along wetland "C" and the bike path to the west, and flows in the opposite direction to wetland "C". It is forested, with dominant vegetation including elm, red maple (*Acer rubrum*), cottonwood, box elder, graystem dogwood, silky dogwood (*Cornus amomum*), wrinkled goldenrod (*Solidago rugosa*), sensitive fern and scouring rush (*Epuisetum hyemale*).

The functions and values of Wetland "H" are generally low and predominantly serve as groundwater discharge (Dubois and King 2011).

Laurel Hill Project Area

Two wetlands were identified in the Laurel Hill neighborhood during the 2010 wetland delineation. Both may be contiguous to nearby areas mapped by the Vermont Agency of Natural Resources on their Vermont Significant Wetlands Inventory (VSWI), and may therefore be presumed to be Class II.

Wetland "A" occurs along the banks of a small tributary to Bartlett Brook, beginning at the outlet of two culverts coming from the Laurel Hill neighborhood. It may be contiguous to a mapped VSWI wetland along the stream to the south, and is very likely to be determined to be a Class II wetland by the VANR based upon its characteristics alone, aside from potential contiguity. It is a forested wetland, with dominant wetland vegetation including red maple, black willow, box elder, nannyberry, cinnamon fern and sensitive fern.

The principal valuable functions of Wetland "A" include sediment/ toxicant retention, nutrient removal/ retention/ transformation and sediment-shoreline stabilization.

Wetland "B" occurs in a cleared right-of-way and along a ditch on the eastern side of the neighborhood's eastern boundary. It extends from there into wooded wetland to the east. It may be contiguous to a mapped VSWI wetland to the southeast, and may be determined to be Class II by the VANR based upon its characteristics independent of contiguity. The mowed wetland adjacent to Laurel Hill is herbaceous, with dominant wetland plants including marsh fern and sensitive fern. In the woods, the wetland is dominated by cottonwood, black willow, sensitive fern, lady fern and ostrich fern.

The principal valuable functions of Wetland "B" in the mowed right-of-way are minimal, with some sediment/toxicant retention and sediment/shoreline stabilization occurring along the ditch (Dubois and King, 2011).

4.5 Fish and Wildlife

Both the Stonehedge and Laurel Hill neighborhoods consist of dense residential development, and are located within urban areas. Therefore, wildlife use is likely to be limited to disturbance-tolerant species such as gray squirrel (*Sciurus carolinensis*), New England cottontails (*Sylvilagus transitionalis*), raccoon (*Procyon lotor*), mice and voles (Muridae spp), skunk (*Mephitis mephitis*), possibly coyotes, American robin (*Turdus migratorius*), blue-jay (*Cyanocitta cristata*), starling (*Sturnus vulgaris*) and northern cardinal (*Carinalis cardinalis*).

Given that the small tributary to Potash Brook located on the northwest side of the Stonehedge development is ephemeral, it is not expected to consistently support fish.

Similarly, the tributary to Bartlett Brook within the Laurel Hill neighborhood where the culvert outlet will be reconstructed is not considered to be significant habitat for fish.

4.6 Threatened and Endangered Species

Based on a review of the U.S. Fish and Wildlife Service's (USFWS) Information, Planning and Conservation System, the northern long-eared bat (*Myotis septentrionalis*) may occur within the project area The USFWS determined to list the northern long-eared bat as threatened on 4 May 2015.

Additionally, based on a review of the Vermont Natural Resources Atlas, known and potential summer habitat Indiana bat (*Myotis sodalis)* occurs approximately five miles south of the project area. Indiana bats spend the winter hibernating in caves and mines. Female Indiana bats occupy summer maternity roosts under the loose bark of dead or dying trees within riparian, floodplain, and upland forests. Tree species commonly used as roost sites include American elm, slippery elm (*Ulmus rubra*), shagbark hickory (*Carya ovate*), silver maple, and green ash. Adult males usually roost in trees near maternity roosts, but some remain near the hibernaculum.

Preferred Indiana bat foraging areas are streams, associated flood plain forests, and impounded bodies of water such as ponds and reservoirs. However, they have been observed in upland forests, pastures and clearings with early successional vegetation, cropland borders, and wooded fencerows (USFWS 2007).

The habitat for and life history of the northern long-eared bat is similar to Indiana bat.

The Vermont Natural Resource Atlas did indicate the potential presence of a rare plant species within the University of Vermont's Horticultural Farm located south of the Laurel Hill Project Area. There were no observations of any rare, threatened or endangered species in either the Stonehedge or the Laurel Hill Project Areas during field investigations. Additionally, such species are not likely to occur within the Project Areas due to dense residential development and associated maintained landscaping.

4.7 Socioeconomics

Based on the 2010 Census, the population of the City of South Burlington is 17,904 with a racial composition of 90% white, 5.4% Asian and 1.9% black. Hispanics of any race comprise 1.9% of the population (U.S. Census Bureau 2010). The U.S. Census Bureau's 2007-2011 American Community Survey indicates that the median age of the population is 40.8 (margin of error +/- 1.4 years) and the median per capita income is $37,285 (margin of error +/- $2,021). Approximately 6.2% (margin of error +/-3.0%) of families and 5.9% (margin of error +/-2.1%) of individuals live below the poverty line. The highest areas of employment were management and business at 52.6%, and sales and office occupations at 22.5% (U.S. Census Bureau 2011).

4.8 Cultural Resources

An Archaeological Resources Assessment (ARA) was prepared for this project in 2011 (University of Vermont [UVT] 2011). The Area of Potential Effect (APE) for this project includes the location of each project alternative, the wetland mitigation area and staging areas for each project. The ARA consisted of the review of the National Register of Historic Places (NRHP) files, the Historic Sites and Structures Survey and the Vermont Archaeological Inventory's USGS master archaeological maps. In addition, relevant local histories and historical maps were consulted to develop the project areas' background histories and general contexts for precontact and historic resources (UVT 2011).

Stonehedge Project Area

No precontact era sites were identified within the bounds of the project APE, however, two sites (VT-CH-995 and VT-CH-996) are adjacent to the eastern limits of the project area. Site VT-CH-995 consisted of precontact Native American artifacts, including 31 specimens of lithic debitage and two broken projectile points. The project points dated to approximately 750-1600 A.D (Middle to Late Woodland periods). Site VT-CH-996 consists of a single artifact, the midsection of a broken projectile point that suggested a date of approximately 900-100 BC (Early Woodland period) (UVT 2011).

There are no known historic period sites within the APE. There are no properties that are listed on or eligible for the NRHP within the APE. A review of the historic period maps did not identify any structures within the APE. The Vermont Division of Historic Preservation (VDHP) predictive model for precontact sites indicated that the area is sensitive for precontact resources. A field inspection conducted in January 2011 noted areas adjacent to the APE that are archaeologically sensitive. A large stormwater pond, which had been built to the west of the subdivision as part of the original construction in the 1970s, was now a large wooded area (UVT 2011).

Laural Hill Project Area

No precontact era sites were identified within the bounds of the project APE. Site VT-CH-27, also known as the Hort Farm site, was identified to the southeast of the Laurel Hill APE. The site consists of numerous projectile points dating to the Middle to Late Woodland periods (ca. 100BC-1600 AD). The site was familiar to precontact Native Americans and provided suitable camping spots on at least three separate occasions (UVT 2011).

There are no known historic period sites within the APE. There are no properties that are listed on or eligible for the NRHP within the APE. A review of the historic period maps did not identify any structures within the APE. The Vermont Division of Historic Preservation (VDHP) predictive model for precontact sites indicated that the area is sensitive for precontact resources. A field inspection conducted in January 2011 noted that project elements are situated within disturbed areas of the APE (UVT 2011).

4.9 Hazardous, Toxic, and Radioactive Waste

For both the Stonehedge and Laurel Hill project areas, a review of the US Environmental Protection Agency Data bases, including the Comprehensive Environmental Response, Compensation and Liability Information System (CERCLIS), the National Priorities List (NPL), the Toxic Release Inventory System (TRIS), the No Further Remedial Action Planned (NFRAP), and Resource Conservation and Recovery Information System (RCRIS) was conducted. There are no federally listed sites in vicinity of the two project areas, including the wetland mitigation and staging areas. The State of Vermont data bases, maintained by the Agency for Natural Resources, showed no locations of environmental concerns within or adjacent to the project areas.

4.10 Recreation

There are three segments of the South Burlington Recreation Path within and adjacent to the Stonehedge neighborhood; one along the southern boundary, and two that traverse the development itself. The southwestern portion of the development borders the Syzmanksi Park. The park consists of a basketball court, two tennis courts, walking paths and a small playground.

4.11 Air Quality

In accordance with the Clean Air Act of 1977, as amended, the Environmental Protection Agency (EPA) developed National Ambient Air Quality Standards (NAAQS) to establish the maximum allowable atmospheric concentrations of pollutants that may occur while ensuring protection of public health and welfare, and with a reasonable margin of safety.

The USEPA measures community-wide air quality based on daily measured concentrations of six criteria air pollutants; carbon monoxide, sulfur dioxide, respirable particulate matter, lead, nitrogen dioxide, and ozone. Based on these measurements of air quality, the USEPA designates attainment areas and non-attainment areas nationwide. Non-attainment areas are designated in areas where air pollution levels persistently exceed the national ambient air quality standards.

Chittenden County is located in the Champlain Valley Interstate Air Quality Control Region (40 CFR Ch.1 7-1-05 edition part 81.44). Based on the NAAQS, six primary pollutants, Chittenden County is in attainment area for ozone, carbon monoxide, sulfur dioxide, respirable particulate matter (PM 1.0 & PM 2.5), lead, and nitrogen dioxide.

5.0 Environmental Affects of Alternatives

5.1 Land Use

The proposed project will not affect current or future land use. However, enhance the current land use of both neighborhoods will be enhanced through the reduction of nuisance flooding that occurs during heavy storm events.

5.2 Topography and Soils

There will be some topographical changes within the Stonehedge Project Area due to the construction of the stormwater detention pond. These modifications will facilitate proper drainage into and retention of stormwater within the pond.

No significant impacts to soils are anticipated from implementation of the project. Rather, one of the objectives of the project is to reduce soil erosion by reducing peak flows related to stormwater runoff.

With respect to statewide "Primary Agricultural Soils", the proposed project is occurring within established residential neighborhoods that do not include any additional land uses such as agriculture or silviculture that could potentially be adversely impacted by implementation of stormwater management measures.

5.3 Water Resources

Benefits resulting from the proposed project include the reduction in both sediment and phosphorus loading. The stormwater management measures proposed for the Stonehedge neighborhood could result in an annual removal of 3,584 pounds of total suspended solids and 11.1 pounds of total phosphorus (Dubois and King 2014). Additionally, the stormwater detention pond has been designed to retain peak flows over a range of storm events that are associated with channel erosion. For example, the post project peak flows at the outlet for the 1-year 24 hour event reduces the discharge velocity from 10 cubic feet per second (cfs) to 0.4 cfs (Dubois & King, 2014).

The stormwater management measures proposed for the Laurel Hill neighborhood will achieve a reduction in suspended sediment and phosphorus loads primarily through the decrease of peak flows during storm events.

Benefits achieved by reducing sediment and phosphorus input into waterbodies include enhanced aquatic habitat through the increase in dissolved oxygen, and a reduction in temperature fluctuations and the potential of algal blooms.

There is no direct work proposed in the Potash or Bartlett Brook tributaries located within the Project Areas. Erosion and sediment control best management practices such as silt fence and intlet protection will be implemented during construction to prevent temporary impacts to water quality.

5.4 Vegetation

Approximately 1.06 acres of vegetation will be removed during construction. As the majority of the vegetation is located in wetlands or wetland buffer, further discussion of the impacts are described in section 4.4.1.

5.4.1 Wetlands

Stonehedge Project Area

Approximately 0.25 acres of wetland "C" and 0.02 acres of wetland "H" will essentially be converted to an emergent wetland as a result of the construction of the stormwater detention pond. In addition, approximately 0.60 acres of wetland buffer associated with wetlands "H" and "C" will be permanently impacted from the construction of the stormwater detention pond.

Tree species to planted around the stormwater detention pond include wetland species such as red maple (*Acer rubrum)*, river birch (*Betula nigra*), hackberry (*Celtic occidentalis*), white oak (*Quercus bicolor*), and Princeton elm (*Ulmus American Princeton*). Shrub species to be planted include chokeberry (*Aronia melanocarpa*), summersweet (*Clethra alnifolia*), buttonbush (*Cephalanthus occidentalis*), gray dogwood (*Cornus racemosa*), red osier dogwood (*Cornus sericea)*, witchhazel (*Hamamelis virginiana*), inkberry (*Ilex glabra*), winter berry (*Ilex verticillata*) and spice bush (*Lindera benzoin*).

In addition, coniferous species such as balsam fir (*Abies balsamea*), American larch (*Larix Laricina*), white spruce (*Picea glauca*), and white pine (*Pinus strobus*) will be installed around the stormwater detention pond as a visual screen.

The bottom of the stormwater detention pond will be seeded with lurid sedge (*Carex lurida*), blunt broom sedge (*Carex scoparia*), blue vervain, hop sedge (*Carex lupulina*), green bulrush, (*Scirpus atrovirens*), redtop panic grass, (*Panicum rigidulum*), tufted hairgrass, (*Deschampsia cespitosa*), tickseed sunflower/bur marigold, (*Bidens aristosa*), creeping spike rush, (*Eleocharis palustris*), soft rush, (*Juncus effusus*), fringed sedge, (*Carex crinita*), square stemmed monkey flower, (*Mimulus ringens*), swamp aster, (*Aster puniceus*), boneset, (*Eupatorium perfoliatum*), rattlesnake grass, (*Glyceria canadensis*), swamp milkweed, (*Asclepias incarnata*), common sneezeweed, (*Helenium autumnale*), and ditch stonecrop, (*Penthorum sedoides*).

During the design phase, an effort was made to reposition the stormwater detention pond out of the existing wetlands but the presence of a sanitary sewer line and the existing topography made its relocation infeasible. However, 0.06 acres of temporary impacts to wetland buffer were avoided by reducing the amount of grading just north of the outlet control structure. The groundwater hydrology to the remaining wetland complex will not be impacted given that the bottom elevation of the pond will remain equal to or higher than existing water surface elevations.

In order to compensate for the unavoidable impact of the 0.27 acres of wetland and 0.60 acres of wetland buffer related to the construction of the stormwater detention pond, 0.85 acres of wetland "C" that is dominated by giant reed, an invasive species, will be enhanced through herbicide treatments to remove the giant reed and replanting with native herbaceous, shrub and tree species.

It is currently anticipated that giant reed will be treated by a licensed herbicide applicator on the entire site and follow-up treatment will occur one year later. Initial treatment is anticipated to

occur in August 2015. Wetland mitigation plantings may occur following the herbicide application or in the fall of 2016 following the second application of herbicide.

Trees species to be planted include red maple, river birch, hackberry, white oak, Princeton elm Balsam fir, American larch, white spruce, white pine, and black spruce (*Picea mariana*). Shrub species to be planted include chokeberry, summersweet, buttonbush, gray dogwood (*Cornus racemosa*), red osier dogwood, witchhazel, inkberry, spice bush, wild raisin (*Viburnum cassinoides*), highbush cranberry (*Viburnum opulus*), and winter berry.

In addition, tublings of red osier dogwood, shrub willow and silky dogwood will be planted at a rate of 400 stems per acre. The planting of tublings is intended to create a dense shrub wetland to suppress invasive species which will improve the functions and values of the wetland.
The entire area will be seeded with a native grass and wildflower mix that includes Virginia wild rye (*Elymus virginicus*), switchgrass (*Panicum virgatum*), red fescue (*Festuca rubra*), fox sedge (*Carex vulpinoidea*), blue vervain (*Verbena hastate*), sensitive fern (*Onoclea senisbilitis*), green bulrush (*Scirpus atrovirens*), wool grass (*Scirpus cypernius*), devil's beggartick (*Bidens frondosa*), spotted joe-pye weed (*Eupatorium maculatus*), boneset (*Eupatorium perfoliatum*), soft rush (*Juncus effuses*), and New England aster (*Symphyotrichum nova-angliae*).

The City of South Burlington will be responsible for conducting monitoring and any adaptive management necessary to ensure success of the mitigation site. In accordance with Vermont and Federal Wetland Regulations, the mitigation site will be monitored for a minimum of five years and will focus on conducting surveys to verify the survivability and growth of the vegetation planted and to confirm that the percentage of aerial coverage of invasive plant species (e.g. giant reed) is not increasing. Adaptive management measures that could potentially be employed to ensure mitigation success include invasive species management through herbicide application, implementation of anti-herbivory measures, soil amendments/fertilizers and replanting of native wetland species.

Construction of the stormwater detention pond will temporarily impact approximately 0.10 acres of wetland "C" and 390 square feet of wetland "H". Approximately 0.07 acres of wetland buffer will be temporarily impacted during construction activities. These areas will be reseeded/replanted following construction completion.

Approximately 0.03 acres of wetland "B" and 0.05 acres of wetland buffer will be temporarily impacted during construction of a small bioretention area. The disturbed area will be seeded with a native wetland grass mix after construction.

<u>Laurel Hill Project Area</u>
Approximately 72 square feet of Wetland A and 288 square feet of Wetland B will be temporarily impacted by the extension of the existing stormwater sewers. The disturbed areas will be seeded with a native wetland grass mix after construction.

5.5 Fish and Wildlife

During construction, increased noise levels, and earth moving activities may cause displacement of bird and mammal species. This disturbance would be temporary and would cease once the removal action is completed. No in-channel work is proposed as part of this project. Therefore, no adverse impacts to fish species are expected as a result from project implementation. However, the reduction of total suspended solids and phosphorus loads will indirectly improve aquatic habitat by improving dissolved oxygen levels and moderating water temperature fluctuations that can occur from heavy sediment and nutrient loads.

The stormwater detention pond could potentially serve as habitat for amphibian and reptiles and the native vegetation planted the after construction will provide nesting and foraging habitat for birds.

5.6 Threatened and Endangered Species

To avoid potential adverse impacts to northern long-eared and Indiana bat, a tree clearing restriction from 1 April through 30 September will be implemented. No permanent adverse impacts are anticipated as a result of the proposed project.

5.7 Socioeconomics

The proposed project serves to provide better stormwater management that will improve water quality and reduce instances of flooding within the Stonehedge and Laurel Hill neighborhoods. In addition, the proposed action will occur within existing common space and/or existing easements. Therefore, adverse impacts to socioeconomics are not anticipated.

5.7.1 Environmental Justice

Executive Order 12898, Federal Actions to address Environmental Justice in Minority and Low Income Populations mandates that each federal agency will identify and address potential disproportionately high and adverse human health or environmental effects of its activities on minority and low income populations.

A cursory analysis was conducted to determine the potential applicability of Environmental Justice issues. The analysis took into account a comparison of the percentage of low income and minority populations occurring in South Burlington and Chittenden County.

Based on a review of the 2010 Census data, the combined minority population of the City of South Burlington is less than 50% and is slightly higher than Chittenden County (9.6% City, 7.0%). The percentage of individuals and families living below the poverty line in the City is lower than Chittenden County. As a result, the cursory Environmental Justice analysis reviewed impacts the project may have on combined minority populations only.

The proposed project serves to upgrade existing the existing stormwater management infrastructure to the Stonehedge and Laurel Hill neighborhoods in order to enhance aquatic habitat, improve water quality and address nuisance flooding issues. Construction will

predominantly occur in existing easements and in areas that have already been disturbed. Native vegetation will be planted in and around the stormwater detention pond to maintain the aesthetics of the area. Therefore, a disproportionate negative impact on minority populations in the community is not anticipated and a full evaluation of Environmental Justice issues is not required for this EA.

5.8 Cultural Resources

Stonehedge Project Area

Based on current project plans (see Appendix B), all project elements will be constructed within areas that have been previously disturbed and avoid any areas that have been determined to be archaeologically sensitive. The proposed project will have no effect to historic properties within the APE.

Laurel Hill Project Area

Based on current project plans (see Appendix B), all project elements will be constructed within areas that have been previously disturbed and avoid any areas that have been determined to be archaeologically sensitive. The proposed project will have no effect to historic properties within the APE.

5.9 Hazardous, Toxic and Radioactive Waste (HTRW)

Based on the review of the federal and state databases, there are no known locations of concern within either the Stonehedge and Laurel Hill project areas.

5.10 Recreation

The proposed project will not adversely impact recreation within the two Project Areas. The proposed stormwater detention pond within the Stonehedge Project Area is partially located within the Szymanski Park. The basketball court located in Szymanski Park is within close proximity of the proposed stormwater detention pond, but is expected to remain functional during construction.

Should the Szymanksi Park be used for staging and stockpile areas, the contractor must maintain safe pedestrian access to park facilities including playground, basketball court, tennis court and walking paths and must maintain emergency vehicle access.

5.11 Air Quality and Noise

Air Quality

The General Conformity Rule of the Clean Air Act requires federal agencies to ensure that any federal actions occurring in areas designated as nonattainment or maintenance for any of the NAAQS do not interfere with a state's plans to meet national standards for air quality.

Chittenden County is not located in a nonattainment or maintenance area for any of the NAAQS, therefore a General Conformity analysis is not required. Given the relatively small scope of the project and short construction duration (2 to 3 months), the equipment emissions are expected to be minimal and temporary in nature.

Noise

There will be an increase in noise levels in the immediate Project Areas during operation of construction equipment. However these impacts are expected to be short-term and limited to the period of active construction. Any impacts from noise will be mitigated to the extent possible through restriction of work hours to within normal operating hours and by complying with any locally enforced noise ordinance or work periods. There will be no long-term impact on noise levels.

5.12 Cumulative Impacts

Cumulative impacts result when the effects of an action are added to or interact with other effects in a particular place and within a particular time frame. Therefore, the cumulative impacts of an action can be viewed as the total effects on a resource or ecosystem of that action and all other activities affecting that resource regardless of the entity (federal, non-federal or private) taking the actions. The Council of Environmental Quality's regulations require that cumulative impacts be considered along with temporary and long term impacts in order to ensure that the range of actions considered in NEPA documents includes not only the proposed project, but also all actions that could contributed to cumulative impacts.

Past actions that are appropriate to consider are the existing stormwater systems within the two neighborhoods. Both systems are outdated and are undersized to accommodate the current stormwater volumes. In addition, the current stormwater systems are not designed to reduce pollutants such as phosphorus. The proposed project will utilize the most current stormwater management technology and was designed in accordance with the state of Vermont's Stormwater Management Manual.

Future actions to consider include other watershed restoration and or stormwater runoff reduction projects. The District has partnered with the South Burlington to implement stream restoration measures and stormwater management measures within their planned City Center development located approximately three miles northeast from the Project Area. Construction of the Potash Brook project is expected to occur sometime in 2016.

Additionally, the City of Burlington has initiated a comprehensive study to reduce stormwater runoff throughout the Bartlett Brook watershed. The proposed project and future actions will cumulatively reduce stormwater and pollution that adversely impact the Potash and Bartlett Brook watersheds.

6.0 Coordination

As the non-federal sponsor, South Burlington has completed substantial public and agency coordination related to the proposed project. Several public meetings were held in 2007 and 2010 to obtain public feedback on design alternatives. South Burlington has also coordinated with staff from the Vermont Agency of Natural Resources and utility companies including Green Mountain Power, Comcast, Fairpoint, South Burlington Department of Public Works, Vermont

Gas and the Champlain Water District. In addition, South Burlington has taken the lead in obtaining local and state permits.

The District has maintained close coordination with the City of South Burlington during the finalization of plans and specifications. The District has provided a copy of the Environmental Assessment to the USFWS and is continuing coordination with them. The circulation of this Environmental Assessment for public comment fulfills public coordination requirements in accordance with the National Environmental Policy Act of 1970. Pertinent Federal and State regulations are located in Table 1.

Table 1. Summary of Primary Federal and State Laws and Regulations Applicable to the Proposed Project

Federal		
Legislative Title U.S. Code/Other		Compliance
Clean Air Act	42 U.S.C. §§ 7401-7671g	The project is located in an attainment area for all NAAQS, therefore a General Conformity analysis is not required.
Clean Water Act	33 U.S.C. §§ 1251 et seq.	A wetland permit application has been submitted to VTDEC and is currently under review. A 404(b) Review is included in this report in Appendix A. A Vermont Construction General Permit has been obtained from the Vermont Department of Environmental Conservation and is included in Appendix C.
Endangered Species Act of 1973	16 U.S.C. §§ 1531 et seq.	A review of pertinent databases indicates that no threatened or endangered species inhabit the Project Area.
Fish and Wildlife Coordination Act	16 U.S.C. § 661 et seq.	The draft Environmental Assessment has been provided to the U.S. Fish and Wildlife Service to satisfy this requirement continued coordination with the USFWS is underway.
National Environmental Policy Act of 1969	42 U.S.C. §§ 4321-4347	The circulation of the Draft EA fulfills requirements of this act.
National Historic Preservation Act of 1966, as amended	16 U.S.C. §§ 470 et seq.	The draft EA will be used to coordinate with the State Historic Preservation Office to fulfill requirements of this act.
Executive Order 11990, Protection of Wetlands	May 24, 1977	Circulation of this report for public and agency review fulfills the requirements of this order.
Executive Order 13045, Protection of Children from Environmental Health Risks and Safety Risks	April 21, 1997	Implementation of this project will reduce environmental health risks. Circulation of this report for public and agency review fulfills the requirements of this order
State		
Legislative Title and code/date		Compliance
Vermont Act 250	10 V.S.A. Chapter 151	The permit has been received and is included in Appendix C.
Vermont Wetland Permit	Vt. Code R. 12 004 056	The permit has been received and is included in Appendix C.

7.0 Conclusion

In summary, the implementation of the proposed stormwater management measures in the Stonehedge and Laurel Hill neighborhoods is not anticipated to have significant adverse impacts on the environment and it is therefore proposed that a Finding of No Significant Impact (FONSI) be prepared pending the public review period. A draft FONSI is located in Appendix D. The proposed action will reduce the amount of phosphorus and other pollutants that reduce water quality from being introduced into Bartlett and Potash Brooks. Adverse impacts to wetlands will be minimized through:

- Implementation of stormwater management measures within previously disturbed areas to the extent practicable;
- Installation of erosion and sediment control best management practices such as silt fence during construction and establishing limits of disturbance; and
- Replanting disturbed areas with native seed and vegetation;
- Compensation of unavoidable wetland impacts through the enhancement of 0.85 acres of existing on-site wetlands via invasive species management and replanting with native wetland herbaceous, shrub and tree species.
- Implementation of a tree clearing restriction window of 1 April through 30 September to protect the northern long-eared and Indiana bat.

8.0 References

Dubois and King. May 20, 2011. South Burlington Stormwater Project, Stonehedge and Laurel Hill Developments, Existing Conditions Report. Prepared for the City of South Burlington and the U.S. Army Corps of Engineers, New York District.

Dubois and King. April 2014. Bartlett Brook North Stormwater: Stonehedge and Laurel Hill, South Burlington, Vermont. Design Documentation Report.

Hoyle, Tanner & Associates. October 19, 2007. Laurel Hill South Neighborhood Flood Mitigation Alternatives Investigation.

Lamoureux & Dickinson Consulting Engineers, Inc. November 2007. Stonehedge Stormwater Study Report, South Burlington, Vermont.

Vermont Department of Environmental Conservation, Water Quality Division. August 2007. Total Maximum Daily Load to Address Biological Impairment in Bartlett Brook (VT05-11), Chittenden County, Vermont.

State of Vermont, Natural Resources Board, Water Resoures Panel (VT WRP). January 2008. Vermont Water Quality Standards, VT Code R. 12 004 052

Natural Resources Conservation Service. June 2006. Farmland Classification Systems for Vermont Soils.

Soil Survey Staff, Natural Resources Conservation Service, United States Department of Agriculture. Web Soil Survey. Available online at http://websoilsurvey.nrcs.usda.gov/. Accessed [month/day/year].

_____. February 2007. New Jersey Hydric Soil List. Available at: http://soils.usda.gov/use/hydric/

University of Vermont, Consulting Archaeology Program. 2011. Revised Archaeological Resources Assessment for the proposed Bartlett Brook North Stormwater Project, South Burlington, Chittenden County, Vermont. Report No. 633. Submitted by Charles Knight, Consulting Archaeology Program, University of Vermont. Submitted to Mark Miller, DuBois and King.

U.S. Census Bureau. 2010. Profile of General Population and Housing Characteristics:2010, South Burlington, Vermont. Accessed March 3, 2014.

_____.2011a. 2007-2011 Selected Economic Characteristics, American Community Survey for South Burlington, Vermont. Accessed March 3, 2014.

U.S. Fish and Wildlife Service. April 2007. Indiana Bat (*Myotis* sodalis) Draft Recovery Plan: First Revision. U.S. Fish and Wildlife Service, Fort Snelling, MN.

9.0 List of Preparers

Kimberly Rightler, Project Biologist, U.S. Army Corps of Engineers, NY District.
Nancy Brighton, Project Archaeologist, U.S. Army Corps of Engineers, NY District.
Richard Dabal, Physical Scientist, U.S. Army Corps of Engineers, NY District.

Appendix A
Section 404(b)(1) Evaluation

Bartlett Brook Storm Water Management
Section 404 (b)(1) Evaluation

I. PROJECT DESCRIPTION

a. Location: The neighborhoods of Stonehedge and Laurel Hill, City of South Burlington, Chittenden County, Vermont.

b. General Description: Implementation of stormwater management measures. Specifically, work proposed in the Stonehedge neighborhood includes the construction of a stormwater detention pond that includes a forebay to collect sediment, four bioretention facilities, and improvement of existing drainage swales.

Proposed work within the Laurel Hill neighborhood includes the replacement of undersized pipes, underground storage, and installation of a parallel pipe system that prevent flow from Bartlett Brook from flowing into the existing drainage pipes.

c. Authority and Purpose:
The project has been authorized by Section 542 of the Water Resources Development Act of 2000 (WRDA). The purpose of the project is to improve water quality and aquatic habitat to tributaries of Bartlett and Potash Brooks and to reduce flooding through the implementation of stormwater management measures.

d. General Description of Fill Material
1. Characteristics of Material: in-situ soil, top soil, rock in the form of gravel sub-base material and rip rap.
2. Quantity of Material: 60 cubic yards of combined gravel sub-base and riprap related to the stormwater detention pond forebay berm protection, and 249 cy of cut and fill related to regrading to construct the stormwater detention pond in the Stonehedge neighborhood.
3. Source of Material: The soil utilized to construct the wet pond at the Stonehedge Project Area will consist of in-situ soil and clean clay material brought in from a reliable source. Rock material used for rip rap will also be brought in from a reputable, outside source.

e. Description of the Proposed Discharge Sites
1) Location: The discharge site is comprised of two forested wetland complex located along the west and southwest portion of the Stonehedge neighborhood in the City of South Burlington.
2) Size: The discharge areas include 0.25 acres of forested wetlands that will be permanently disturbed through the construction of the stormwater detention pond in the Stonehedge neighborhood. It is expected that the pond will turn into an emergent wetland once it becomes established. 0.03 acres of scrub shrub wetland will be temporarily impacted during construction activities related to construction of one of the bioretention areas.

In order to compensate for the unavoidable impact, approximately 0.85 acres of existing wetland located south of the retention basin will be enhanced through invasive species management and replanting with native wetland herbaceous, shrub and tree species.

3) Type of Site: The Stonehedge Project Area is a residential community consisting of approximately 220 townhomes. The Laurel Hill Project Area is a residential neighborhood comprising of single family residences situated on 1/3 acre lots.
4) Types of Habitat: The Stonehedge Project Area is primarily comprised of maintained lawn within primary residential areas and a combination of forested and scrub-shrub wetlands and uplands on the south and southwestern perimeter of the neighborhood.
5) Time and Duration of Disposal: Construction is anticipated to begin April 2015 and last for approximately six months.

f. Description of Disposal Method: Typical land based construction equipment (e.g. bulldozer, hydraulic excavator) will be used to construct the stormwater management measures.

II. FACTUAL DETERMINATION

a. Physical Substrate Determinations

1)Substrate Evaluation and Slope: The proposed action is not occurring within a waterbody. Soils within the project area include the Duane and Deerfield soil group, the Adams and Windsor loamy sands complex and the Scarboro soil series. The topography within the Stonehedge neighborhood project area is somewhat steep with an average 8% slope. The topography of the Laurel Hill neighborhood is generally flat.

2) Sediment Type: The Duane and Deerfield soil complex is comprised of sand and gravelly glaciofluvial deposits. The Adams and Windsor soil complex is predominantly comprised of loamy sands.

3) Dredged/Fill Material Movement: Fill activities will occur in freshwater forested wetlands. Construction activities related to grading and installation of stormwater management features will result in the temporary impact of 0.16 acres within the Stonehedge Project Area and 0.03 acres within the Laurel Hill Project Area. Temporary wetland impacts will be mitigated through on-site restoration following completion of construction activities.

Excavation, regrading and placement of fill comprising of soil, riprap and a concrete outlet structure will result in the permanent impact of 0.25 acres of forested wetland. The wetland to be impacted has undergone previous disturbance and the proposed action will ultimately enhance the stormwater retention function of the wetland. In order to compensate for the unavoidable impact, approximately 0.85 acres of existing wetland located south of the retention basin will be enhanced through invasive species management and replanting with native wetland herbaceous, shrub and tree species.

4) Physical Effects on Stream Bottom: Not applicable.

5) Other Effects: Due to the small size of the project, no unique or other effects are anticipated from this project.

6) Actions Taken to Minimize Impacts: Best management practices include but are not limited to silt fencing, straw bales, check dams, inlet protection and temporary seeding/mulching of disturbed areas will be utilized during construction.

b. Water Circulation, Fluctuation and Salinity Determinations

1) Water, Consider Effects on:

a. Salinity- No effect

b. Water Chemistry- The proposed project is expected to improve water chemistry by reducing the amount of pollutants and sediments that can cause adverse impacts to water chemistry components such as pH, dissolved oxygen and temperature.

c. Clarity - The project will have an indirect positive benefit in improving clarity of the Potash and Bartlett Brook tributaries by reducing the amount of sediment introduced into these systems. Erosion and sediment control best management practices will be implemented during construction to minimize sedimentation to these tributaries.

d. Color - No effect

e. Odor - No effect

f. Taste - No effect

g. Dissolved Gas Levels - The proposed project could provide minor benefits in increasing dissolved oxygen levels by reducing the contribution of sediments and nutrients into receiving stream systems.

h. Nutrients - The proposed project will assist in reducing the overall contribution of nutrients contained in stormwater runoff into receiving stream systems.

i. Eutrophication - The project will have an overall positive impact on preventing e eutrophication of Bartlett and Potash Brooks, their associated tributaries and Lake Champlain through the reduction of sediment and phosphorus loads being introduced into said waterbodies.

j. Others as Appropriate- No other adverse impacts are anticipated from the project.

2) Current Patterns and Circulation:

a. Current Patterns and Flow - No effect.
b. Velocity - The proposed project will reduce the velocities in which stormwater enters
c. Stratification - No effect.
d. Hydrologic Regime - No effect.

3) Normal Water Level Fluctuations: No effect.

4) Salinity Gradients: Not applicable

5) Actions Taken to Minimize Impacts: Erosion and sediment control best management practices including but not limited to silt fence, inlet protection, check dams and temporary seeding/mulching of disturbed areas will be implemented during construction.

c. Suspended Particulate/Turbidity Determinations.

1) Expected Changes in Suspended Particulates and Turbidity Levels in Vicinity of Disposal Sites: Effects of the proposed project on turbidity and suspended sediment concentrations will be minimal.

2) Effects on Chemical/Physical Properties of the Water Column:

a. Light Penetration - No effect.

b. Dissolved Oxygen - The project may have negligible positive benefits in increasing dissolved oxygen by reducing the amount of sediment and nutrients into the nearby river systems.

c. Toxic Metals and Organics - The proposed construction will not have any adverse impact on the environment related to increasing or contributing trace metals or organic contaminants. Rather, the proposed project serves to reduce the contribution of organic pollutants into receiving stream systems.

d. Pathogens - The project will not cause any change in pathogen levels as no sewage or animal waste use or treatment is involved.

e. Aesthetics - The proposed action will not adversely impact the aesthetics within the project area. Landscaping in the form of trees and shrubs will be placed around the proposed stormwater detention pond at the Stonehedge Project area and the proposed bioretention features will be seeded and

f. Others as Appropriate - Not applicable

3) Effects on Biota:

a. Primary Production, Photosynthesis - Not applicable

b. Suspension/ Filter Feeders - Not applicable.

c. Sight Feeders - Not applicable.

4) Actions Taken to Minimize Impacts: Erosion and sediment control best management practices including but not limited to silt fence, inlet protection, check dams and temporary seeding/mulching of disturbed areas will be implemented during construction.

d. Contaminant Determinations: All fill material will be clean and will not pose a risk. No known hazardous or toxic waste is known to be present on the site.

e. Aquatic Ecosystem and Organism Determinations.

1) Effects on Plankton: No significant effects.
2) Effects on Benthos: No significant effects.
3) Effects on Nekton: No significant effects.
4) Effects on Aquatic Food Web: No significant effects.
5) Effects on Special Aquatic Sites:

a. Sanctuaries and Refuges- Non applicable

b. Wetlands - Approximately .25 acres of forested wetland will be converted to an emergent wetland, and approximately 0.15 acres of forested wetland will be temporarily impacted due to the construction of the stormwater detention pond. The impacts will be mitigated through the replanting of native wetland vegetation. The conversion will result in enhancing the wetlands ability to filter sediment and nutrients. In order to compensate for the unavoidable impact, approximately 0.85 acres of existing wetland located south of the retention basin will be enhanced through invasive species management and replanting with native wetland herbaceous, shrub and tree species.

c. Mudflats- Not applicable.
d. Vegetated Shallows- Not applicable.
e. Coral Reefs- Not applicable.
f. Riffle and Pool Complexes- Not applicable.

6) Threatened and Endangered Species: No state or Federally Threatened, Endangered species will be adversely impacted from project implementation.

7) Other Wildlife: The project will not have any significant long-term impacts on the waterfowl, upland birds or mammals in the project area. Due to their mobility, these organisms will avoid the site if conditions are temporarily unsuitable. Construction of the stormwater detention pond could provide habitat to amphibian and reptile species.

8) Actions to Minimize Impacts: Best management practices including but not limited to silt fence, straw bales, inlet protection, check dams and temporary seeding/mulching of disturbed areas will be utilized during construction.

f. Proposed Disposal Site Determinations

1) Mixing Zone: Not applicable

2) Determination of Compliance with Applicable Water Quality Standards: Fill will be clean construction material.

3) Potential Effects on Human Use Characteristic:
a. Municipal and Private Water Supply - Not applicable.
b. Recreational and Commercial Fisheries - Not applicable.
c. Water Related Recreation - Not applicable.
d. Aesthetics – No impacts to aesthetics will occur from implementation of the proposed project. Tree and shrub species will be installed around the stormwater detention pond in the Stonehedge Project Area to maintain aesthetics.
e. Parks, National and Historical Monuments, National Seashores, Wilderness Areas, Research Sites, and Similar Preserves- Not Applicable
g. Determination of Cumulative Effects on the Aquatic Ecosystem.
No cumulative effects from this project are expected on the aquatic ecosystem.
h. Determination of Secondary Effects on the Aquatic Ecosystem.

The proposed project is anticipated to have positive secondary effects on the aquatic ecosystem primarily through the reduction of sediment and phosphorus being introduced into waterways.

III. FINDINGS OF COMPLIANCE OR NON-COMPLIANCE WITH THE RESTRICTIONS ON DISCHARGE.

a. No significant adaptation of the Section 404(b)(1) guidelines was made relative to this evaluation.
b. The project serves to improve water quality and reduce nuisance flooding through the implementation of the proposed stormwater management measures.
c. The proposed activity will not violate the Toxic Effluent Standards of Section 307 of the Clean Water Act.
d. The proposed disposal operations will not harm any endangered species or its critical habitat under the Endangered Species Act of 1973.
e. The proposed discharge of fill material will not result in significant adverse effects on human health and welfare, including municipal and private water supplies, fish, wildlife, and special aquatic sites. The life stages of aquatic life and other wildlife will not be significantly affected. Minimal adverse effects on aquatic ecosystem diversity, productivity and stability, and recreational, aesthetic and economic values will not occur.
f. Appropriate steps to minimize potential adverse impacts of the discharge of fill material include the implementation of an erosion and sediment control plan and judicious engineering practices.

Appendix B

Project and Mitigation Plans

MAY 2010 NYD A/E COVER

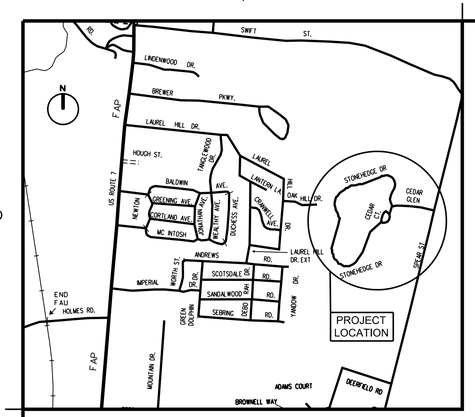

VICINITY MAP
NOT TO SCALE

STONEHEDGE STORMWATER IMPROVEMENTS SOUTH BURLINGTON, VERMONT FINAL PLANS MAY 2015

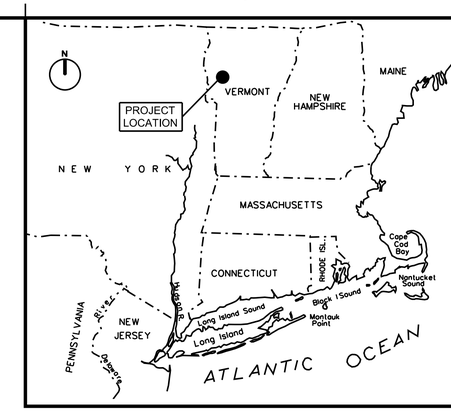

LOCATION PLAN
SCALE IN MILES
60 0 60 120

INDEX TO DRAWINGS

SHEET NO.	SHEET REF. NO.	TITLE
01	G-001	INDEX TO DRAWINGS
02	G-002	GENERAL NOTES
03	RR-001	LOCAL COOPERATION SHEET
04	C-101	EXISTING CONDITIONS AND DEMOLITION SITE PLAN
05	C-102	OVERALL SITE PLAN
06	C-103	SOUTH - SITE PLAN
07	C-104	SOUTH EAST BIORETENTION AREA - SITE PLAN
08	C-105	EAST - SITE PLAN AND PROFILE
09	C-106	NORTH EAST - SITE PLAN
10	C-107	POND - SITE PLAN
11	C-108	POND - LAYOUT PLAN
12	C-109	SOUTH WEST BIORETENTION AREA - SITE PLAN
13	C-110	NORTH WEST BIORETENTION AREA- SITE PLAN
14	C-301	POND SECTIONS - STA. 0+00 TO STA. 1+50
15	C-302	POND SECTIONS - STA. 2+00 TO STA. 3+50
16	C-303	POND SECTIONS - STA. 4+00 TO STA. 5+50
17	L-401	SOUTH EAST BIORETENTION AREA - LANDSCAPING PLAN
18	L-402	SOUTH WEST BIORETENTION AREA - LANDSCAPING PLAN
19	L-403	POND - LANDSCAPING PLAN
20	L-404	NORTH WEST BIORETENTION AREA - LANDSCAPING PLAN
21	L-405	WETLAND MITIGATION - LANDSCAPING PLAN
22	L-406	DETAILS - LANDSCAPING
23	C-501	STORM DRAIN DETAILS
24	C-502	SITE AND WATER RELOCATION DETAILS
25	C-503	EROSION CONTROL DETAILS

PROFESSIONAL SEAL

PREPARED BY:

PRINCIPAL, A/E FIRM

DATE

US Army Corps of Engineers
New York District

MARK	DESCRIPTION	DATE	APPR.	MARK	DESCRIPTION	DATE	APPR.

DESIGNED BY: HLV
DWN BY: ZDC
CKD BY: MTM
SUBMITTED BY: D&K
FILE NAME: ...\dgn\120808C_G001.dgn
SIZE: ANSI D
PLOT SCALE: 1=NTS
PLOTTED BY: DUBOIS & KING
DATE: MAY 2015
SOLICITATION NO.:
CONTRACT NO.:
PLOT DATE: 5/20/2015

U. S. ARMY ENGINEER DISTRICT
NEW YORK
http://www.nan.usace.army.mil

DuBois & King INC.

STONEHEDGE
STORMWATER IMPROVEMENTS
SOUTH BURLINGTON, VERMONT

INDEX TO DRAWINGS

SHEET REFERENCE NUMBER
G-001
SHEET 01 OF 25

Submitted by: DUBOIS & KING
...\dgn\120808C_G001.dgn
Plot Date: 5/20/2015 10:08:50 AM

MAY 2010 NYD A/E BORDER

GENERAL NOTES

1. THE PURPOSE OF THIS PROJECT IS TO IMPROVE THE CONVEYANCE AND TREATMENT OF STORMWATER THROUGH THE SITE BY IMPROVING SWALES, DITCHES, REPLACING UNDERSIZED STORM DRAINS, AND CREATING A NEW TREATMENT POND AND SEVERAL BIORETENTION AREAS.
2. THE PROJECT OWNER IS THE CITY OF SOUTH BURLINGTON. THE OWNER WILL APPOINT AN ENGINEER TO REPRESENT THE OWNER DURING CONSTRUCTION OF THE PROJECT.
3. TOPOGRAPHY SHOWN ON THE PLANS ARE BASED ON FIELD SURVEY COMPLETED BY DUBOIS & KING DEC 22, 2010 (VERTICAL DATUM: NAVD 88).
4. ENGINEERING PERFORMED BY DuBOIS & KING, INC.. CONTACT PERSON IS MATT MURAWSKI 802-728-3376
5. WRITTEN DIMENSIONS HAVE PRECEDENCE OVER SCALED DIMENSIONS. IN CASE OF CONFLICT BETWEEN THIS PLAN SET AND ANY OTHER DRAWING AND/OR SPECIFICATION, THE ENGINEER SHALL BE NOTIFIED IMMEDIATELY FOR CLARIFICATION.
6. THE CONTRACTOR SHALL BE FAMILIAR WITH THE EXISTING CONDITIONS OF THE SITE AND SURROUNDINGS PRIOR TO BIDDING ON OR PERFORMING THE WORK.
7. THE CONTRACTOR SHALL BID AND PERFORM THE WORK FROM A COMPLETE SET OF PLANS AND SPECIFICATIONS, AND SHALL NOTIFY THE ENGINEER OF ANY CONFLICTS WITHIN THE CONSTRUCTION DOCUMENTS.
8. THE CONTRACTOR IS RESPONSIBLE FOR THE MEANS AND METHODS OF CONSTRUCTION AND FOR CONDITIONS AT THE SITE. THESE PLANS, PREPARED BY DUBOIS & KING, DO NOT EXTEND TO OR INCLUDE SYSTEMS PERTAINING TO THE SAFETY OF THE CONSTRUCTION CONTRACTOR OR THEIR EMPLOYEES, AGENTS OR REPRESENTATIVES IN THE PERFORMANCE OF THE WORK. THE SEAL OF THE SURVEYOR OR ENGINEER HERE ON DOES NOT EXTEND TO ANY SUCH SAFETY SYSTEMS THAT MAY NOW OR HEREAFTER BE INCORPORATED INTO THESE PLANS. THE CONSTRUCTION CONTRACTOR SHALL PREPARE OR OBTAIN THE APPROPRIATE SAFETY SYSTEMS, WHICH MAY BE REQUIRED BY THE U.S. OCCUPATIONAL SAFETY AND HEALTH ADMINISTRATION (OSHA) AND/OR LOCAL REGULATIONS.
9. THE CONTRACTOR SHALL BID AND PERFORM THE WORK IN ACCORDANCE WITH ALL LOCAL, STATE, AND NATIONAL CODES, SPECIFICATIONS, REGULATIONS, STANDARDS, AND DETAILS.
10. SUBMIT SHOP DRAWINGS AND PRODUCT LITERATURE (MANUFACTURERS LITERATURE, CUT SHEETS, APPLICATION PROCEDURES, ETC.) FOR ALL PRODUCTS FOR USE IN THE PROJECT, FOR APPROVAL BY THE ENGINEER.
11. NO DEVIATION OR DEPARTURE FROM THE DESIGN INTENT PRESENTED IN THE CONTRACT DOCUMENTS (PLANS AND SPECIFICATIONS) WILL BE ALLOWED UNLESS AUTHORIZED BY THE ENGINEER.
12. NO BURNING OR ON-SITE DISPOSAL OF TREES, BRUSH, STUMPS OR OTHER CONSTRUCTION DERBIES IS PERMITTED. CONTRACTOR SHALL REMOVE SUCH MATERIAL AND DISPOSE OF THEM OFF-SITE IN A LEGAL MANNER.

CONSTRUCTION NOTES

1. LOCATE STAGING AREAS AWAY FROM SENSITIVE AREAS INCLUDING WETLANDS AND STREAM BUFFERS. STAGING AREAS TO BE PLACED IN LOCATIONS AGREED UPON BY CITY OF SOUTH BURLINGTON AND STONEHEDGE HOME OWNER'S REPRESENTATIVE.
2. THE CONTRACTOR IS RESPONSIBLE FOR ALL TEMPORARY SHORING, WATER DIVERSION, AND DEWATERING REQUIREMENTS NEEDED FOR THE PROJECT.
3. ALL WORK TO BE CONDUCTED IN THE DRY. CONTRACTOR IS RESPONSIBLE FOR DIVERTING, BYPASS PUMPING OR OTHERWISE ISOLATING THE WORK AREA FROM FLOWING WATER. CONTRACTOR TO SUBMIT CONTROL OF WATER PLAN PRIOR TO CONSTRUCTION
4. THE CONTRACTOR MAY DISCHARGE TURBID WATER IN SEDIMENT FILTER BAGS, WHICH ARE TO BE PLACED ON VEGATED UPLAND AREAS. THESE FILTER BAGS SHALL BE REMOVED FROM THE SITE ONCE USED AND DISPOSED OF IN APPROVED WASTE AREAS.

MEETINGS AND SUBMITTALS

1. THE CONTRACTOR MUST PARTICIPATE IN AN ON-SITE PRE-CONSTRUCTION CONFERENCE.
2. THE CONTRACTOR MUST SUBMIT AN UPDATED ANTICIPATED WORK SCHEDULE TO THE ENGINEER EACH WEEK.
3. THE CONTRACTOR MUST SUBMIT A CONTROL OF WATER PLAN TO THE ENGINEER FOR APPROVAL PRIOR TO CONSTRUCTION.
4. THE CONTRACTOR MUST SUBMIT TO THE ENGINEER MATERIAL SLIPS FOR ALL MATERIALS AND ITEMS USED ON THE PROJECT PER THE SPECIFICATIONS.
5. THE CONTRACTOR MUST PROVIDE THE ENGINEER THE OPPORTUNITY TO INSPECT, WITH 48-HOUR PRIOR NOTICE.

PERMITS

1. THE FOLLOWING PERMITS ARE BEING SECURED BY THE OWNER FOR THIS PROJECT:

   - CONSTRUCTION STORMWATER PERMIT FROM VERMONT AGENCY OF NATURAL RESOURCES NPDES

   - STATE WETLAND PERMIT FROM THE VT AGENCY OF NATURAL RESOURCES

2. THE CONTRACTOR IS RESPONSIBLE FOR FAMILIARIZING HIMSELF WITH THE REQUIREMENTS OF THIS PERMIT PRIOR TO BIDDING, AND FOR COMPLYING WITH IT DURING CONSTRUCTION.

UTILITIES

1. ALL UTILITIES SHOWN ARE APPROXIMATE AND BASED UPON BEST AVAILABLE INFORMATION AS PROVIDED BY UTILITY PROVIDERS, CITY OF SOUTH BURLINGTON AND FIELD SURVEY.
2. PRIOR TO CONSTRUCTION THE CONTRACTOR IS RESPONSIBLE FOR VERIFYING AND DETERMINING THE LOCATION, SIZE AND ELEVATIONS OF ALL UTILITIES (ABOVE AND BELOW GROUND) WITHIN THE PROJECT LIMITS, AND TO TAKE THE NECESSARY PRECAUTIONS TO PROTECT UTILITIES DURING CONSTRUCTION. CONTACT DIG-SAFE AT 1-800-DIG-SAFE (WWW.DIGSAFE.COM).
3. THE OWNER SHALL BE NOTIFIED IN WRITING OF ANY UTILITIES FOUND INTERFERING WITH THE PROPOSED CONSTRUCTION, AND APPROPRIATE REMEDIAL ACTION BE SHALL BE DETERMINED AND AGREED UPON BY THE ENGINEER BEFORE PROCEEDING WITH THE WORK.

STAGING AND STOCK PILE AREAS

1. THE FOLLOWING LOCATIONS ON CITY PROPERTY MAY BE AVAILABLE TO THE CONTRACTOR FOR STAGING OF SUPPLIES AND EQUIPMENT DURING CONSTRUCTION. THE CITY MAY BE BIDDING MULTIPLE PROJECTS AND AS SUCH THE CITY WILL CLARIFY WHICH SITE OR SITES WILL BE AVAILABLE FOR THIS PROJECT DURING THE BID PERIOD.
   A. EAST END OF SEBRING ROAD (EAST OF LAST DRIVEWAY).
   B. APPROXIMATELY 1/3 ACRE IN THE OPEN GRASSED AREA IN SZYMANSKI PARK SOUTHWEST OF THE BASKETBALL COURT. SAFE PEDESTRIAN ACCESS TO PARK FACILITIES INCLUDING PLAYGROUND, BASKETBALL COURT, TENNIS COURTS, AND RECREATIONAL PATHS MUST BE MAINTAINED.
   C. UP TO HALF OF THE SZYMANSKI PARK PARKING LOT AT THE EASTERN END OF ANDREWS AVENUE. PEDESTRIAN AND EMERGENCY VEHICLE ACCESS TO SZYMANSKI PARK FROM ANDREWS AVENUE MUST BE MAINTAINED.
2. THE CONTRACTOR SHALL PROVIDE FENCING OR SUITABLE DEMARCATION TO PREVENT INADVERTENT PEDESTRIAN ACCESS TO THE STAGING AREA.
3. THE CONTRACTOR WILL BE EXPECTED TO COORDINATE WITH THE CITY TO FINALIZE LOCATIONS OF STAGING AREAS ON CITY PROPERTY PRIOR TO THE START OF CONSTRUCTION.
4. THE CONTRACTOR MAY IDENTIFY AND SECURE THE USE OF ADDITIONAL STAGING AREAS ON NON-CITY PROPERTY.

BIORETENTION AREAS

1. PLANTING SOIL
   THE SOIL SHOULD BE A UNIFORM MIX, FREE OF STONES, STUMPS, ROOTS OR OTHER SIMILAR OBJECTS LARGER THAN TWO INCHES. NO OTHER MATERIALS OR SUBSTANCES SHOULD BE MIXED OR DUMPED WITHIN THE BIORETENTION AREA THAT MAY BE HARMFUL TO PLANT GROWTH, OR PROVE A HINDRANCE TO THE PLANTING OR MAINTENANCE OPERATIONS. THE PLANTING SOIL SHOULD BE FREE OF NOXIOUS WEEDS.
2. THE PLANTING SOIL SHOULD BE TESTED AND SHOULD MEET THE FOLLOWING CRITERIA:

PH RANGE	5.2 - 7.0
ORGANIC MATTER	1.5 - 4%
MAGNESIUM	35 LB./AC
PHOSPHORUS P2O5	75 LB./AC
POTASSIUM K2O	85 LB./AC
SOLUBLE SALTS	NOT TO EXCEED 500 PPM

3. ALL BIORETENTION AREAS SHOULD HAVE A MINIMUM OF ONE TEST. EACH TEST SHOULD CONSIST OF BOTH THE STANDARD SOIL TEST FOR PH, PHOSPHORUS, AND POTASSIUM AND ADDITIONAL TESTS OF ORGANIC MATTER, AND SOLUBLE SALTS. A TEXTURAL ANALYSIS IS REQUIRED FROM THE SITE'S STOCKPILED TOPSOIL. IF TOPSOIL IS IMPORTED, THEN A TEXTURE ANALYSIS SHOULD BE PERFORMED FOR EACH LOCATION WHERE THE TOPSOIL WAS EXCAVATED.
4. ALL TESTING RESULTS SHOULD COME FROM THE SAME TESTING FACILITY.
5. SHOULD THE PH FALL OUT OF THE ACCEPTABLE RANGE, IT MAY BE MODIFIED (HIGHER) WITH LIME OR (LOWER) WITH IRON SULFATE PLUS SULFUR.
6. COMPACTION
   IT IS VERY IMPORTANT TO MINIMIZE COMPACTION OF BOTH THE BASE OF THE BIORETENTION AREA AND THE REQUIRED BACKFILL. WHEN POSSIBLE, USE EXCAVATION HOES TO REMOVE ORIGINAL SOIL. IF BIORETENTION AREA IS EXCAVATED USING A LOADER, THE CONTRACTOR SHOULD USE WIDE TRACK OR MARSH TRACK EQUIPMENT, OR LIGHT EQUIPMENT WITH TURF TYPE TIRES. USE OF EQUIPMENT WITH NARROW TRACKS OR NARROW TIRES, RUBBER TIRES WITH LARGE LUGS, OR HIGH PRESSURE TIRES WILL CAUSE EXCESSIVE COMPACTION RESULTING IN REDUCED INFILTRATION RATES AND STORAGE VOLUMES AND IS NOT ACCEPTABLE. COMPACTION WILL SIGNIFICANTLY CONTRIBUTE TO DESIGN FAILURE.
7. COMPACTION CAN BE ALLEVIATED AT THE BASE OF THE BIORETENTION FACILITY BY USING A PRIMARY TILLING OPERATION SUCH AS A CHISEL PLOW, RIPPER, OR SUBSOILER. THESE TILLING OPERATIONS ARE TO REFRACTURE THE SOIL PROFILE THROUGH THE 12-INCH COMPACTION ZONE. SUBSTITUTE METHODS MUST BE APPROVED BY THE ENGINEER. ROTOTILLERS TYPICALLY DO NOT TILL DEEP ENOUGH TO REDUCE THE EFFECTS OF COMPACTION FROM HEAVY EQUIPMENT.
8. ROTOTILL 2 TO 3 INCHES OF SAND INTO THE BASE OF THE BIORETENTION FACILITY BEFORE BACK FILLING THE REQUIRED SAND LAYER. PUMP ANY PONDED WATER BEFORE PREPARING (ROTOTILLING) BASE.
9. WHEN BACK FILLING THE TOPSOIL OVER THE SAND LAYER, FIRST PLACE 3 TO 4 INCHES OF TOPSOIL OVER THE SAND, THEN ROTOTILL THE SAND/TOPSOIL TO CREATE A GRADATION ZONE. BACKFILL THE REMAINDER OF THE TOPSOIL TO FINAL GRADE.
10. WHEN BACKFILLING THE BIORETENTION FACILITY, PLACE SOIL IN LIFTS 12" OR GREATER. DO NOT USE HEAVY EQUIPMENT WITHIN THE BIORETENTION BASIN. HEAVY EQUIPMENT CAN BE USED AROUND THE PERIMETER OF THE BASIN TO SUPPLY SOILS AND SAND. GRADE BIORETENTION MATERIALS WITH LIGHT EQUIPMENT SUCH AS A COMPACT LOADER OR A DOZER/LOADER WITH MARSH TRACKS.
11. PLANT INSTALLATION
    MULCH AROUND INDIVIDUAL PLANTS ONLY. SHREDDED HARDWOOD MULCH IS THE ONLY ACCEPTED MULCH. PINE MULCH AND WOOD CHIPS WILL FLOAT AND MOVE TO THE PERIMETER OF THE BIORETENTION AREA DURING A STORM EVENT AND ARE NOT ACCEPTABLE. SHREDDED MULCH MUST BE WELL AGED (6 TO 12 MONTHS) FOR ACCEPTANCE.
12. THE PLANT ROOT BALL SHOULD BE PLANTED SO 1/8TH OF THE BALL IS ABOVE FINAL GRADE SURFACE. ROOT STOCK OF THE PLANT MATERIAL SHOULD BE KEPT MOIST DURING TRANSPORT AND ON-SITE STORAGE. THE DIAMETER OF THE PLANTING PIT SHOULD BE AT LEAST SIX INCHES LARGER THAN THE DIAMETER OF THE PLANTING BALL. SET AND MAINTAIN THE PLANT STRAIGHT DURING THE ENTIRE PLANTING PROCESS. THOROUGHLY WATER GROUND BED COVER AFTER INSTALLATION.
13. TREES SHOULD BE BRACED USING 2" X 2" STAKES ONLY AS NECESSARY AND FOR THE FIRST GROWING SEASON ONLY. STAKES ARE TO BE EQUALLY SPACED ON THE OUTSIDE OF THE TREE BALL.
14. GRASSES AND LEGUME SEED SHOULD BE TILLED INTO THE SOIL TO A DEPTH OF AT LEAST ONE INCH. GRASS AND LEGUME PLUGS SHOULD BE PLANTED FOLLOWING THE NON-GRASS GROUND COVER PLANTING SPECIFICATIONS.
15. THE TOPSOIL SPECIFICATIONS PROVIDE ENOUGH ORGANIC MATERIAL TO ADEQUATELY SUPPLY NUTRIENTS FROM NATURAL CYCLING. THE PRIMARY FUNCTION OF THE BIORETENTION STRUCTURE IS TO IMPROVE WATER QUALITY. ADDING FERTILIZERS DEFEATS, OR AT A MINIMUM, IMPEDES THIS GOAL. ONLY ADD FERTILIZER IF WOOD CHIPS OR MULCH IS USED TO AMEND THE SOIL. ROTOTILL UREA FERTILIZER AT A RATE OF 2 POUNDS PER 1,000 SQUARE FEET.
16. UNDERDRAINS
    UNDERDRAINS SHOULD BE PLACED ON A 3'-0" WIDE SECTION OF FILTER CLOTH. PIPE IS PLACED NEXT, FOLLOWED BY THE GRAVEL BEDDING. THE ENDS OF UNDERDRAIN PIPES NOT TERMINATING IN AN OBSERVATION WELL SHOULD BE CAPPED.
17. THE MAIN COLLECTOR PIPE FOR UNDERDRAIN SYSTEMS SHOULD BE CONSTRUCTED AT A MINIMUM SLOPE OF 0.5%. OBSERVATION WELLS AND/OR CLEAN-OUT PIPES MUST BE PROVIDED (ONE MINIMUM PER EVERY 1,000 SQUARE FEET OF SURFACE AREA).
18. THE BIORETENTION FACILITY MAY NOT BE CONSTRUCTED UNTIL ALL CONTRIBUTING DRAINAGE AREAS HAVE BEEN STABILIZED.

EARTHWORK

1. EMBANKMENT MATERIAL SHALL BE COMPACTED EARTH FILL FROM EXCAVATED POND SITE WITH NO SIGNIFICANT POCKETS OF GRAVELS OR GRANULAR MATERIALS, TOPSOIL, COBBLES LARGER THAN 6 INCHES, OR ORGANICS. ALL EMBANKMENT MATERIAL SHALL BE APPROVED BY THE ENGINEER PRIOR TO PLACEMENT OF THE EMBANKMENT. MATERIAL SHALL BE PLACED AND COMPACTED AT OPTIMUM MOISTER CONTENT. THE CONTRACTOR SHALL SUBMIT A SAMPLE OF THE EMBANKMENT MATERIAL TO A SOIL TESTING LABORATORY AND OBTAIN A PROCTOR CURVE (MOISTURE VS. DENSITY) AND A GRAIN SIZE DISTRIBUTION CURVE PRIOR TO CONSTRUCTION.
2. THE EXISTING GRADE UNDER ALL EMBANKMENT FILL AREAS SHALL BE STRIPPED OF ALL ORGANICS AND OTHER UNSUITABLE MATERIALS AND EXCAVATED TO A SUITABLE FOUNDATION. THE CONTRACTOR AND ENGINEER SHALL REVIEW THE FOUNDATION PRIOR TO PLACEMENT OF EMBANKMENT FILL.
3. EMBANKMENT MATERIAL SHALL BE PLACED AND COMPACTED IN 9-INCH LIFTS.

EROSION PREVENTION AND SEDIMENT CONTROL NOTES

1. STANDARDS IN "LOW RISK SITE HANDBOOK FOR EROSION PREVENTION AND SEDIMENT CONTROL" BY VT DEPARTMENT OF ENVIRONMENTAL CONSERVATION, SERVE AS THE REQUIRED EROSION PREVENTION AND SEDIMENT CONTROL PLAN FOR THE SITE. THE CONTRACTOR SHALL BE FAMILIAR WITH THE STANDARDS AND SPECIFICATIONS IN THIS PUBLICATION AND SHALL IMPLEMENT THE APPLICABLE MEASURERS SPECIFIED IN THE HANDBOOK.
2. THE CONTRACTOR SHALL MINIMIZE THE AMOUNT OF DISTURBED SOIL EXPOSED TO EROSION FROM WIND OR STORMWATER AT ANY TIME BY USING VEGETATIVE AND STRUCTURAL CONTROLS AND PROPER TIMING AND SEQUENCING OF CONSTRUCTION ACTIVITIES. CLEAR ONLY WHAT IS REQUIRED FOR THE IMMEDIATE CONSTRUCTION ACTIVITY, AND INSTALL PERMANENT EROSION CONTROL / LAND TREATMENT AS SOON AS POSSIBLE.
3. INSTALL DOWN GRADIENT SILT FENCE PRIOR TO CLEARING AND GRUBBING AND INSTALL NECESSARY EROSION AND SEDIMENT CONTROL PRACTICES AS WORK TAKES PLACE.
4. THE CONTRACTOR SHALL DESIGNATE THE RESPONSIBILITIES FOR IMPLEMENTING THE EROSION AND SEDIMENT CONTROL PLAN TO ONE INDIVIDUAL. THE CONTRACTOR SHALL ENSURE THAT ALL WORKERS UNDERSTAND THE MAJOR PROVISIONS OF THE EROSION AND SEDIMENT CONTROL PLAN.
5. APPLY TEMPORARY OR PERMANENT SOIL STABILIZATION MEASURES IMMEDIATELY ON ALL DISTURBED AREAS WHERE WORK IS DELAYED OR COMPLETED.
6. ALL EARTH STOCKPILES SHALL BE PROTECTED BY A SILT FENCE AT THE PERIMETER AND COVERED WITH A BLANKET OF HAY MULCH.
7. EROSION CHECKS SHALL BE INSTALLED AS INDICATED ON THE DRAWINGS AND AS NECESSARY TO PREVENT EROSION.
8. EROSION CHECKS SHALL REMAIN IN PLACE UNTIL PERMANENT EROSION CONTROL MEASURES HAVE BEEN ESTABLISHED AND APPROVED BY THE OWNER.
9. EROSION CHECKS SHALL BE PERIODICALLY INSPECTED TO INSURE THEY ARE IN GOOD CONDITION AND THAT AN EXCESSIVE BUILDUP OF SILT AND DEBRIS HAS NOT OCCURRED. NOTWITHSTANDING PERIODIC INSPECTIONS, EROSION CHECKS SHALL BE INSPECTED BEFORE AND AFTER RAINFALL EVENTS TO INSURE THEY ARE IN GOOD CONDITION BEFORE RAINFALL AND TO REMOVE EXCESSIVE BUILDUP OF SILT AND DEBRIS AFTER THE STORM EVENT.
10. SLOPED SURFACES SHALL BE ROUGHENED BY DRIVING TRACKED EQUIPMENT UP AND DOWN THE SLOPE AFTER SEEDING AND MULCHING IS COMPLETED. THE GROOVES CREATED BY THE TRACKED CONSTRUCTION EQUIPMENT SHALL RUN ACROSS THE SLOPE HORIZONTALLY AND NOT UP AND DOWN THE SLOPE.
11. ALL DISTURBED SOIL AREAS SHALL BE PERMANENTLY SEEDED AND MULCHED WITHIN 24 HR. OF FINAL GRADING.
12. EROSION BLANKETS SHALL BE USED ON ALL SEEDED AREAS WITH SLOPES IN EXCESS OF 20%, AND FOR ALL AREAS IF SEEDED AFTER SEPTEMBER 15. PRIOR TO SEPTEMBER 15 AND SLOPE LESS THAN 20% TO BE GRASSED SHALL BE SEEDED AND MULCHED.
13. CONTRACTOR SHALL REMOVE ALL TEMPORARY MEASURES ONCE PERMANENT MEASURES HAVE BEEN ADEQUATELY ESTABLISHED.

RESTORATION OF SURFACES

1. THE CONTRACTOR SHALL APPLY A COURSE BED OF CRUSHED GRAVEL TO THE CONSTRUCTION ACCESS DRIVES AND NON PAVED STAGING AREAS AS DIRECTED BY THE ENGINEER TO PREVENT RUTTING, EROSION, AND TRACKING OF MATERIAL OFFSITE.
2. AT THE COMPLETION OF WORK, THE CONTRACTOR MUST RESTORE ACCESS, STAGING, AND WORK AREAS TO PRE-CONSTRUCTION CONDITION. RESTORATION MAY INCLUDE PLACEMENT OF PAVEMENT ON EXISTING DRIVES AND / OR APPLICATION OF TOPSOIL, GRASS SEED, FERTILIZER, AND MULCH TO AFFECTED LAWN AREAS.

US Army Corps of Engineers
New York District

MARK	DESCRIPTION	DATE	APPR.	MARK	DESCRIPTION	DATE	APPR.

U. S. ARMY ENGINEER DISTRICT
NEW YORK
http://www.nan.usace.army.mil

DESIGNED BY: HLV | DATE: MAY 2015
DWN BY: ZDC | CKD BY: MTM | SOLICITATION NO.:
SUBMITTED BY: D & K | CONTRACT NO.:
FILE NAME: ...\dgn\120808C_GN.dgn
SIZE: ANSI D | PLOTTED BY: DUBOIS & KING | PLOT DATE: 5/11/2015

DuBois & King inc.

STONEHEDGE
STORMWATER IMPROVEMENTS
SOUTH BURLINGTON, VERMONT

GENERAL NOTES

SHEET REFERENCE NUMBER
G-002
SHEET 02 OF 25

Submitted by: DUBOIS & KING
...\dgn\120808C_GN.dgn
Plot Date: 5/11/2015 10:26:22 AM

STONEHEDGE KEY PLAN

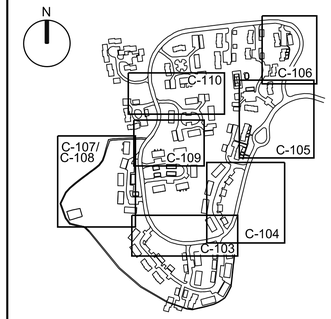

LEGEND (EXISTING)

- WETLANDS
- 6" APPLE / 20" PINE — TREES
- LIGHT POLE
- SEWER MANHOLE
- CATCH BASIN
- WATER SHUT OFF
- GAS SHUT OFF
- ELECTRICAL BOX
- HORIZONTAL VERTICAL CONTROL
- EDGE OF PAVEMENT
- S S_x — SEWER MAIN
- C P — STORM DRAIN
- W_x — WATER MAIN
- C_x — UNDERGROUND COMMUNICATIONS
- E_x — OVERHEAD ELECTRICAL
- E S_x — BURIED ELECTRICAL
- G_x — UNDERGROUND NATURAL GAS
- FENCE
- W — WETLAND BOUNDARY
- P L — PROPERTY LINE

LEGEND (NEW)

- LOD — LIMITS OF DISTURBANCE

UTILITY AND/OR PIPELINE EASEMENT

A PERPETUAL AND ASSIGNABLE EASEMENT AND RIGHT-OF-WAY IN, ON,OVER AND ACROSS (THE LAND DESCRIBED IN SCHEDULE A), FOR THE LOCATION, CONSTRUCTION, OPERATION, MAINTENANCE, ALTERATION; REPAIR AND PATROL OF UNDERGROUND STORM DRAIN PIPE AND APPURTENANCES; TOGETHER WITH THE RIGHT TO TRIM, CUT, FELL AND REMOVE THERE FROM ALL TREES, UNDERBRUSH, OBSTRUCTIONS AND OTHER VEGETATION, STRUCTURES,OR OBSTACLES WITHIN THE LIMITS OF THE RIGHT-OF-WAY; RESERVING, HOWEVER, TO THE LANDOWNERS, THEIR HEIRS AND ASSIGNS, ALL SUCH RIGHTS AND PRIVILEGES AS MAY BEUSED WITHOUT INTERFERING WITH OR ABRIDGING THE RIGHTS AND EASEMENT HEREBY ACQUIRED; SUBJECT, HOWEVER, TO EXISTING EASEMENTS FOR PUBLIC ROADS AND HIGHWAYS, PUBLIC UTILITIES, RAILROADS AND PIPELINES.

TEMPORARY WORK AREA EASEMENT.

A TEMPORARY EASEMENT AND RIGHT-OF-WAY IN, ON, OVER AND ACROSS (THE LAND DESCRIBED IN SCHEDULE A) FOR A PERIOD NOT TO EXCEED 365 DAYS, BEGINNING WITH DATE POSSESSION OF THE LAND IS GRANTED TO THE UNITED STATES, FOR USE BY THE UNITED STATES, ITS REPRESENTATIVES, AGENTS, AND CONTRACTORS AS A WORK AREA, INCLUDING THE RIGHT TO MOVE, STORE, AND REMOVE EQUIPMENT AND SUPPLIES, AND ERECT AND REMOVE TEMPORARY STRUCTURES ON THE LAND AND TO PERFORM ANY OTHER WORK NECESSARY AND INCIDENT TOTHE CONSTRUCTION OF THE BARTLETT BROOK NORTH STORMWATER PROJECT, TOGETHER WITH THE RIGHTTO TRIM, CUT, FELL AND REMOVE THERE FROM ALL TREES, UNDERBRUSH, OBSTRUCTIONS,AND ANY OTHER VEGETATION, STRUCTURES, OR OBSTACLES WITHIN THE LIMITS OF THERIGHT-OF-WAY; RESERVING, HOWEVER, TO THE LANDOWNERS, THEIR HEIRS AND ASSIGNS,ALL SUCH RIGHTS AND PRIVILEGES AS MAY BE USED WITHOUT INTERFERING WITH OR ABRIDGING THE RIGHTS AND EASEMENT HEREBY ACQUIRED; SUBJECT, HOWEVER, TO EXISTING EASEMENTS FOR PUBLIC ROADS AND HIGHWAYS, PUBLIC UTILITIES, RAILROADS AND PIPELINES.

OVERALL REAL ESTATE SITE PLAN

100' 50' 0 100'

SCALE: 1"= 100'-0"

US Army Corps of Engineers
New York District

MARK	DESCRIPTION	DATE	APPR.	MARK	DESCRIPTION	DATE	APPR.

DESIGNED BY: HLV | DATE: MAY 2015
DWN BY: ZDC | CKD BY: MTM | SOLICITATION NO.:
SUBMITTED BY: D & K | CONTRACT NO.:
FILE NAME: ...\12080BC_SP-C102R Real Estate.dgn
SIZE: ANSI D | PLOT SCALE: 1:1 | PLOT DATE: 05/20/15

U. S. ARMY ENGINEER DISTRICT
NEW YORK
http://www.nan.usace.army.mil

DuBois & King INC.

STONEHEDGE
STORMWATER IMPROVEMENTS
SOUTH BURLINGTON, VERMONT

LOCAL COOPERATION SHEET

SHEET REFERENCE NUMBER
RR-001
SHEET 03 OF 25

MAY 2010 NYD A/E BORDER

Submitted by: DUBOIS & KING Plot Date: 5/20/2015 10:14:35 AM
...\12080BC_SP-C102R Real Estate.dgn

MAY 2010 NYD A/E BORDER

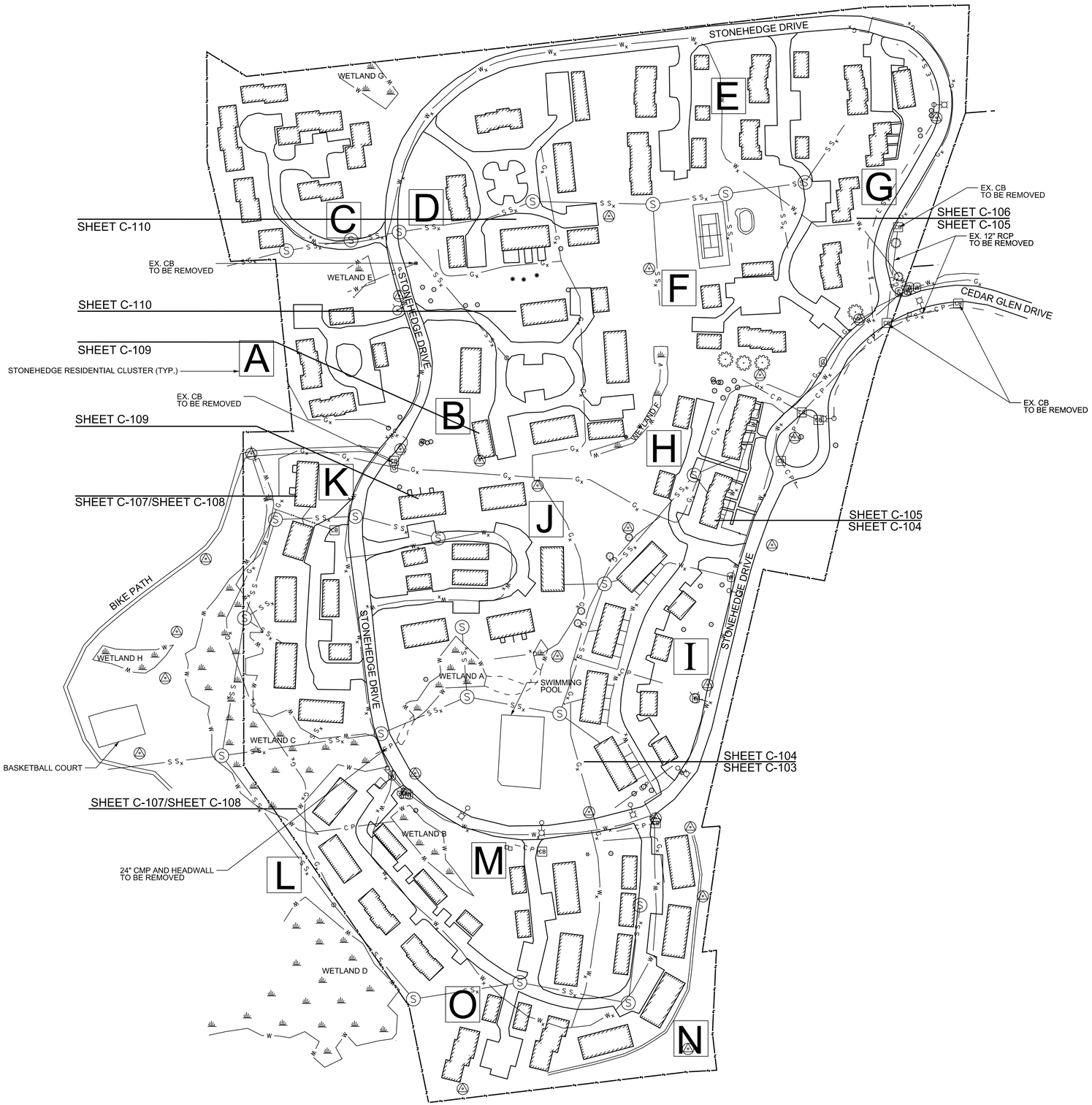

N

LEGEND (EXISTING)

- WETLANDS
- 6" APPLE / 20" PINE — TREES
- LIGHT POLE
- SEWER MANHOLE
- CATCH BASIN
- WATER SHUT OFF
- GAS SHUT OFF
- ELECTRICAL BOX
- HORIZONTAL VERTICAL CONTROL
- EDGE OF PAVEMENT
- SEWER MAIN
- STORM DRAIN
- WATER MAIN
- UNDERGROUND COMMUNICATIONS
- OVERHEAD ELECTRICAL
- BURIED ELECTRICAL
- UNDERGROUND NATURAL GAS
- FENCE
- WETLAND BOUNDARY
- PROPERTY LINE

LEGEND (NEW)

- LIMITS OF DISTURBANCE

EXISTING CONDITIONS SITE PLAN

100' 50' 0 100'

SCALE: 1"= 100'-0"

US Army Corps of Engineers
New York District

MARK	DESCRIPTION	DATE	APPR.	MARK	DESCRIPTION	DATE	APPR.

DESIGNED BY: HLV | DATE: MAY 2015
DWN BY: ZDC | CKD BY: MTM | SOLICITATION NO.:
SUBMITTED BY: D & K | CONTRACT NO.:
FILE NAME: ...\dgn\120808C_SP-C101.dgn
SIZE: ANSI D | FORMAT: 1 PLOT/1 SHEET | PLOT DATE: 5/11/2015

U. S. ARMY ENGINEER DISTRICT
NEW YORK
http://www.nan.usace.army.mil

DuBois & King INC.

STONEHEDGE
STORMWATER IMPROVEMENTS
SOUTH BURLINGTON, VERMONT

EXISTING CONDITIONS &
DEMOLITION SITE PLAN

SHEET REFERENCE NUMBER
C-101
SHEET 04 OF 25

Submitted by: DUBOIS & KING
...\dgn\120808C_SP-C101.dgn
Plot Date: 5/11/2015 10:27:14 AM

MAY 2010 NYD A/E BORDER

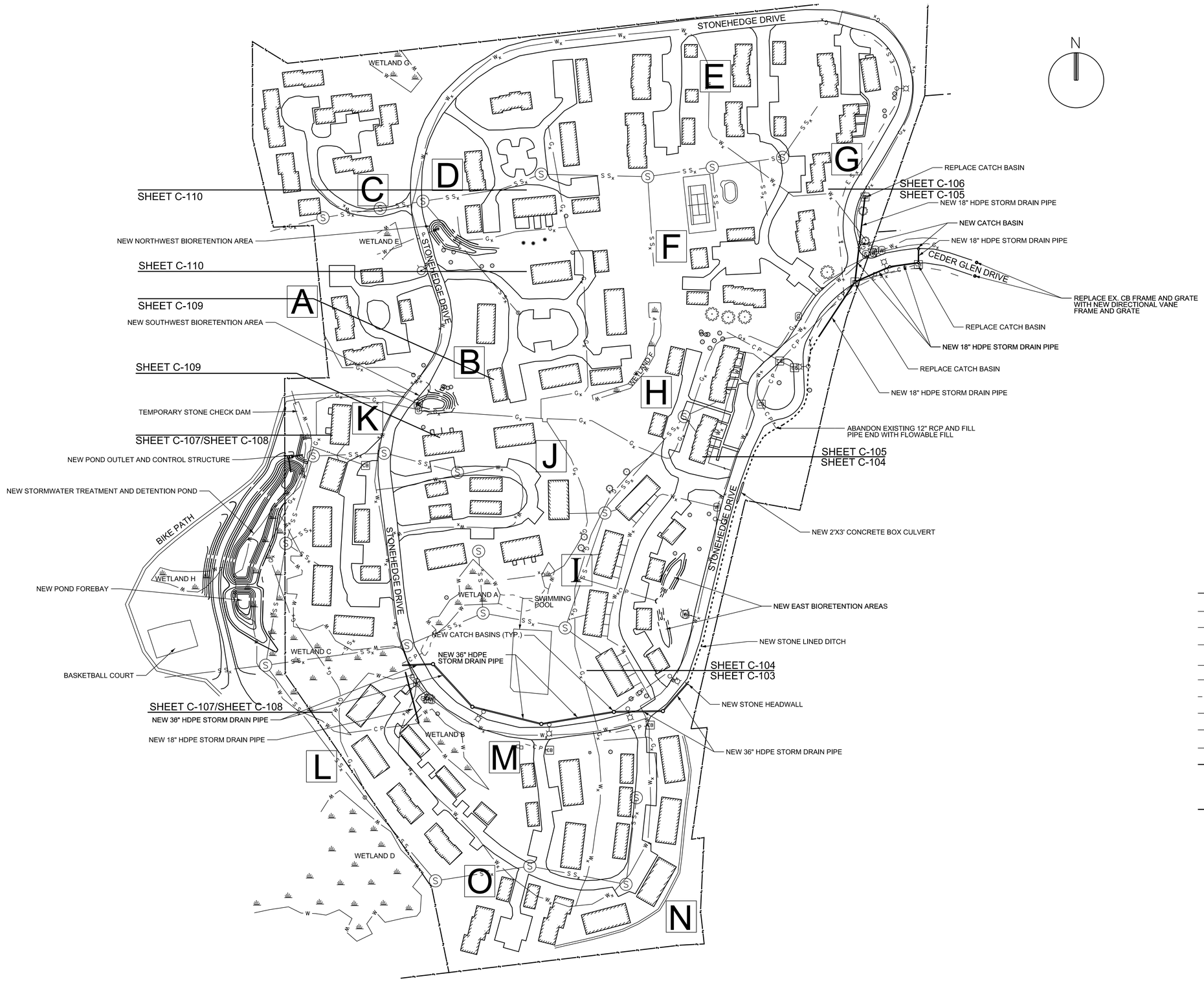

LEGEND (EXISTING)

- WETLANDS
- 8" APPLE, 20" PINE — TREES
- LIGHT POLE
- SEWER MANHOLE
- CATCH BASIN
- WATER SHUT OFF
- GAS SHUT OFF
- ELECTRICAL BOX
- HORIZONTAL VERTICAL CONTROL
- EDGE OF PAVEMENT
- S S_x — SEWER MAIN
- C P — STORM DRAIN
- W_x — WATER MAIN
- C_x — UNDERGROUND COMMUNICATIONS
- E_x — OVERHEAD ELECTRICAL
- E S_x — BURIED ELECTRICAL
- G_x — UNDERGROUND NATURAL GAS
- FENCE
- W — WETLAND BOUNDARY
- P L — PROPERTY LINE

LEGEND (NEW)

- LOD — LIMITS OF DISTURBANCE

OVERALL SITE PLAN

100' 50' 0 100'

SCALE: 1"= 100'-0"

US Army Corps of Engineers
New York District

MARK	DESCRIPTION	DATE	APPR.	MARK	DESCRIPTION	DATE	APPR.

DESIGNED BY: HLV | DATE: MAY 2015
DWN BY: ZDC | CKD BY: MTM | SOLICITATION NO.:
SUBMITTED BY: D & K | CONTRACT NO.:
FILE NAME: ...\dgn\120808c_SP-C102.dgn
SIZE: ANSI D | PLOTTED BY: DUBOIS & KING | PLOT DATE: 5/11/2015

U. S. ARMY ENGINEER DISTRICT
NEW YORK
http://www.nan.usace.army.mil

DuBois & King inc.

STONEHEDGE
STORMWATER IMPROVEMENTS
SOUTH BURLINGTON, VERMONT

OVERALL SITE PLAN

SHEET REFERENCE NUMBER
C-102
SHEET 05 OF 25

Submitted by: DUBOIS & KING
...\dgn\120808c_SP-C102.dgn
Plot Date: 5/11/2015 10:28:30 AM

MAY 2010 NYD A/E BORDER

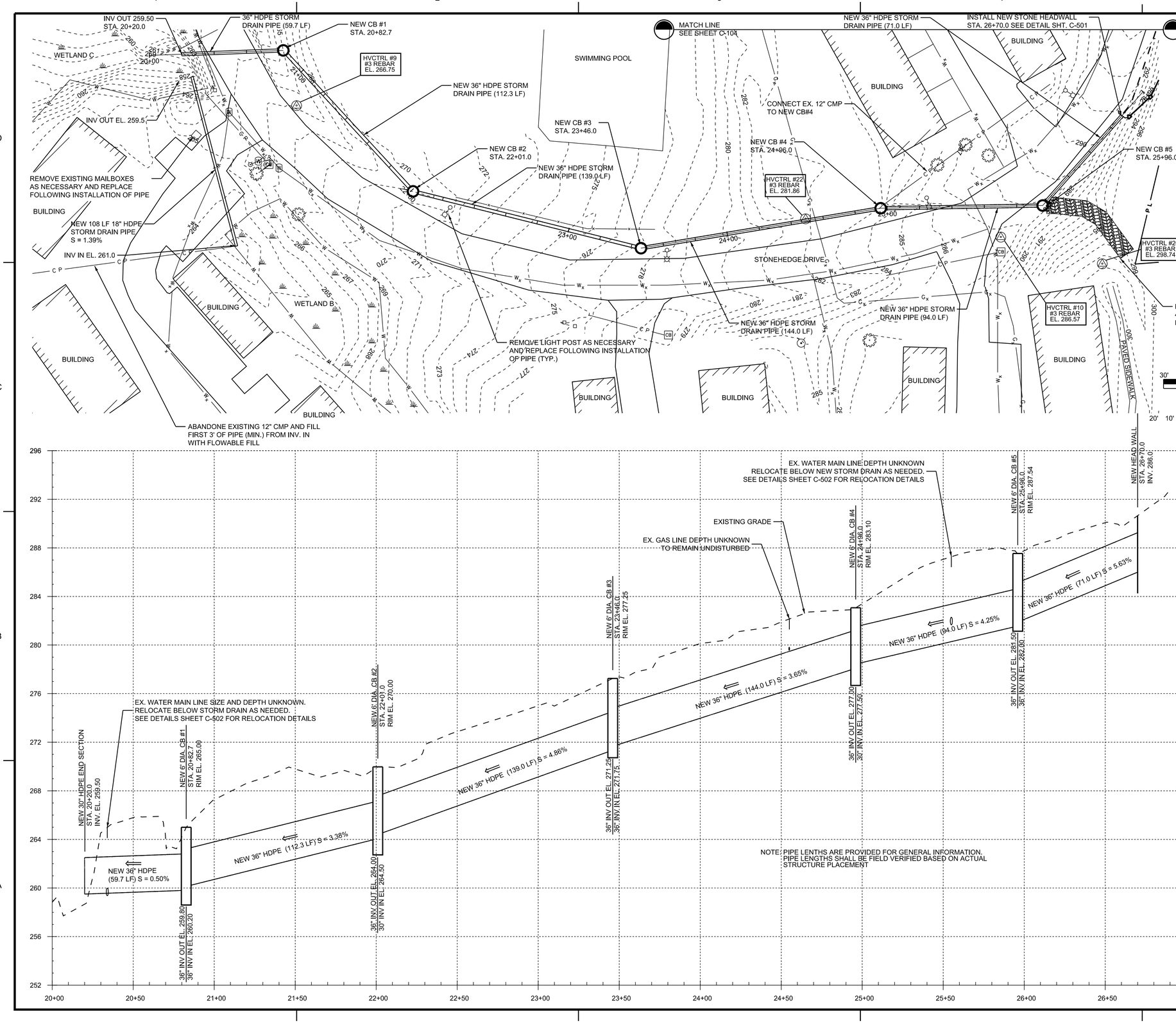

STONEHEDGE KEY PLAN

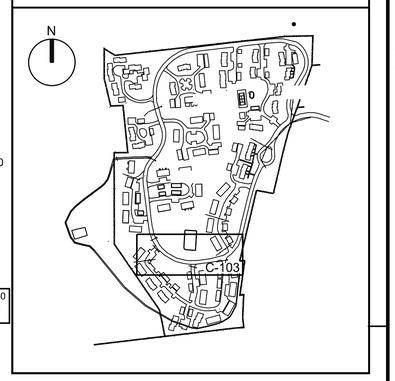

US Army Corps of Engineers
New York District

MARK	DESCRIPTION	DATE	APPR.	MARK	DESCRIPTION	DATE	APPR.

U. S. ARMY ENGINEER DISTRICT
NEW YORK
http://www.nan.usace.army.mil

DuBois & King inc.

DESIGNED BY: HLV | DATE: MAY 2015
DWN BY: ZDC | CKD BY: MTM | SOLICITATION NO.:
SUBMITTED BY: D & K | CONTRACT NO.:
FILE NAME: ...\dgn\120808C_SP-C103.dgn
SIZE: ANSI D | PLOTTED BY: DUBOIS & KING | PLOT DATE: 5/11/2015

STONEHEDGE
STORMWATER IMPROVEMENTS
SOUTH BURLINGTON, VERMONT

SOUTH
SITE PLAN

SHEET REFERENCE NUMBER
C-103
SHEET 06 OF 25

Submitted by: DUBOIS & KING Plot Date: 5/11/2015 10:34:53 AM
...\dgn\120808C_SP-C103.dgn

MAY 2010 NYD A/E BORDER

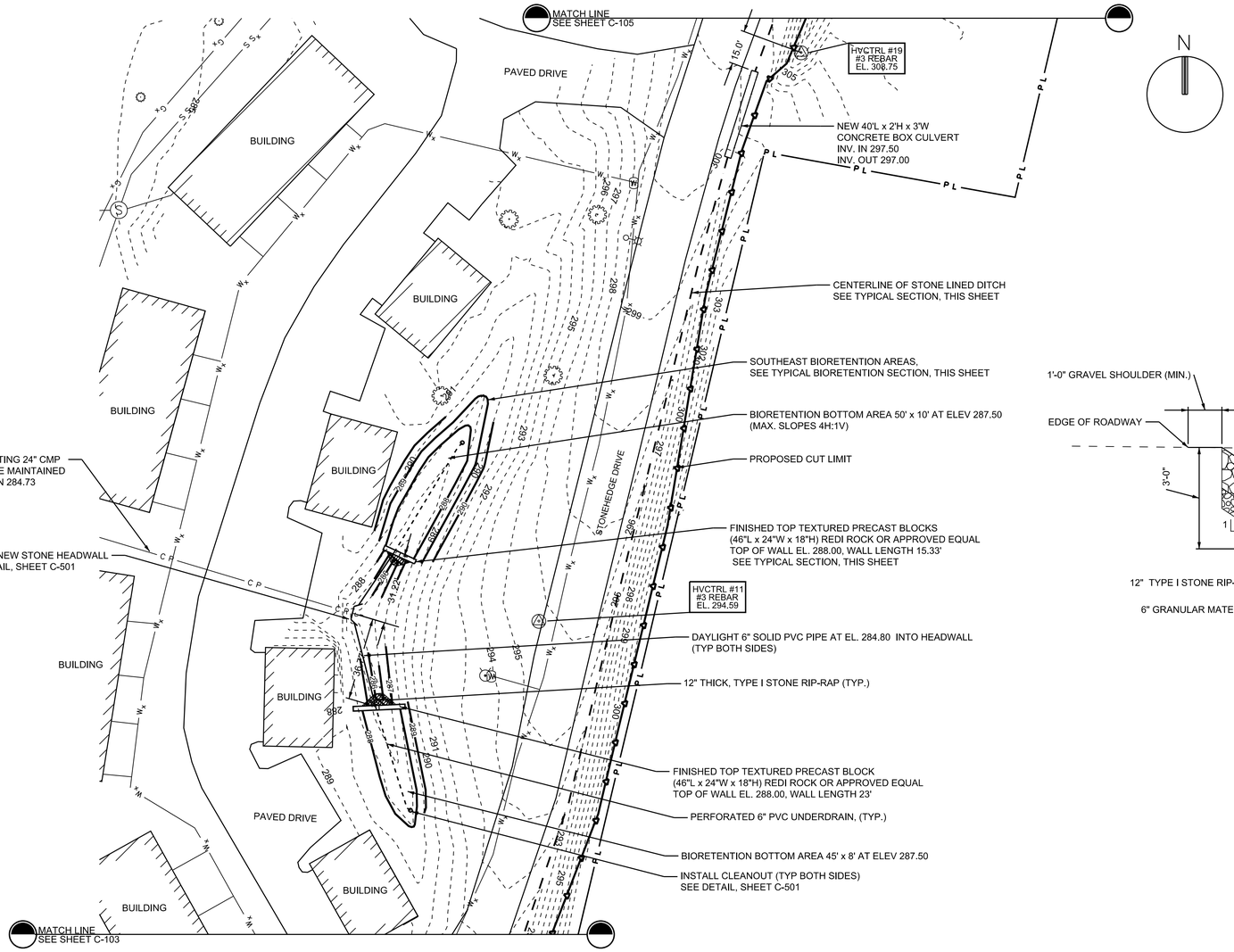

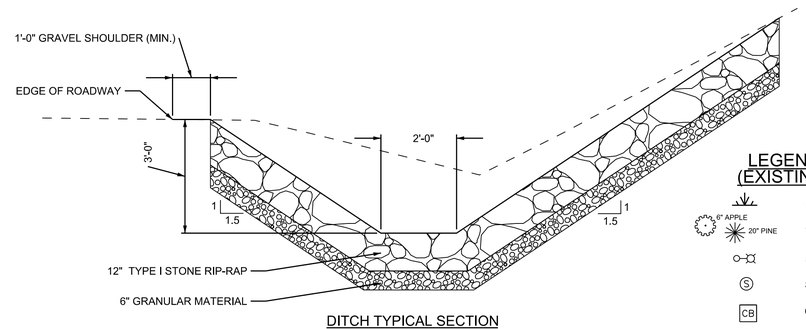

DITCH TYPICAL SECTION

2' 1' 0 2'

SCALE: 1" = 2'-0"

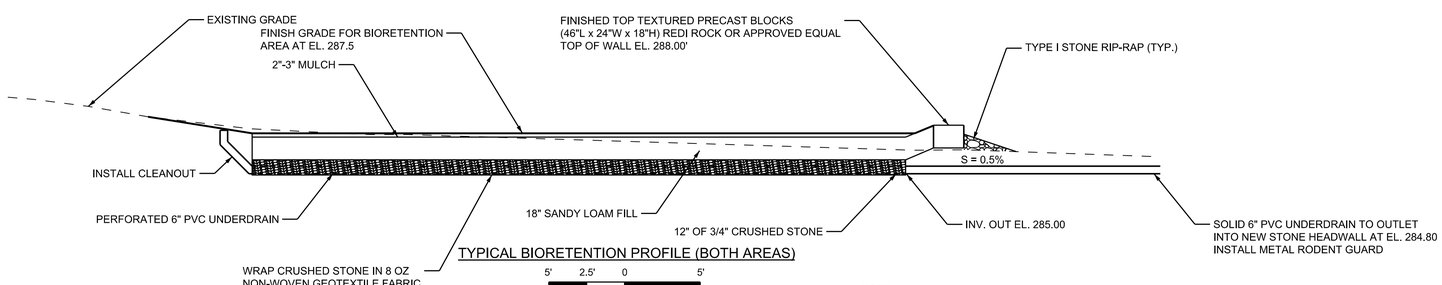

TYPICAL BIORETENTION PROFILE (BOTH AREAS)

5' 2.5' 0 5'

SCALE: 1"= 5'-0"

NOTE:
UNDERDRAIN OFFSET FROM SECTION LINE

STONEHEDGE KEY PLAN

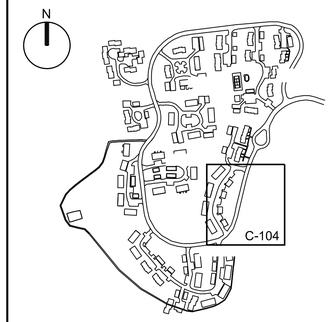

LEGEND (EXISTING)

- WETLANDS
- 6" APPLE / 20" PINE — TREES
- LIGHT POLE
- SEWER MANHOLE
- CATCH BASIN
- WATER SHUT OFF
- GAS SHUT OFF
- ELECTRICAL BOX
- HORIZONTAL VERTICAL CONTROL
- EDGE OF PAVEMENT
- S S_x — SEWER MAIN
- C P — STORM DRAIN
- W_x — WATER MAIN
- C_x — UNDERGROUND COMMUNICATIONS
- E_x — OVERHEAD ELECTRICAL
- E S_x — BURIED ELECTRICAL
- G_x — UNDERGROUND NATURAL GAS
- FENCE
- W — WETLAND BOUNDARY
- P L — PROPERTY LINE

LEGEND (NEW)

- LOD — LIMITS OF DISTURBANCE

SITE PLAN

30' 20' 10' 0 30'

SCALE: 1"= 30'-0"

US Army Corps of Engineers
New York District

MARK	DESCRIPTION	DATE	APPR.	MARK	DESCRIPTION	DATE	APPR.

DESIGNED BY: HLV
DWN BY: ZDC
CKD BY: MTM
SUBMITTED BY: D & K
DATE: MAY 2015
SOLICITATION NO.:
CONTRACT NO.:
FILE NAME: ...\dgn\120808C_SP-C104.dgn
SIZE: ANSI D
PLOTTED BY: DUBOIS & KING
PLOT DATE: 5/11/2015

U. S. ARMY ENGINEER DISTRICT
NEW YORK
http://www.nan.usace.army.mil

DuBois & King INC.

STONEHEDGE
STORMWATER IMPROVEMENTS
SOUTH BURLINGTON, VERMONT

SOUTHEAST BIORETENTION AREA
SITE PLAN

SHEET REFERENCE NUMBER
C-104
SHEET 07 OF 25

Submitted by: DUBOIS & KING
...\dgn\120808C_SP-C104.dgn
Plot Date: 5/11/2015 10:36:11 AM

MAY 2010 NYD A/E BORDER

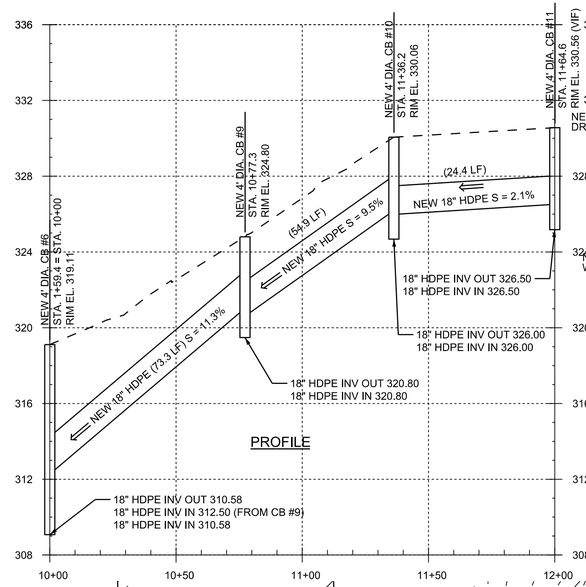

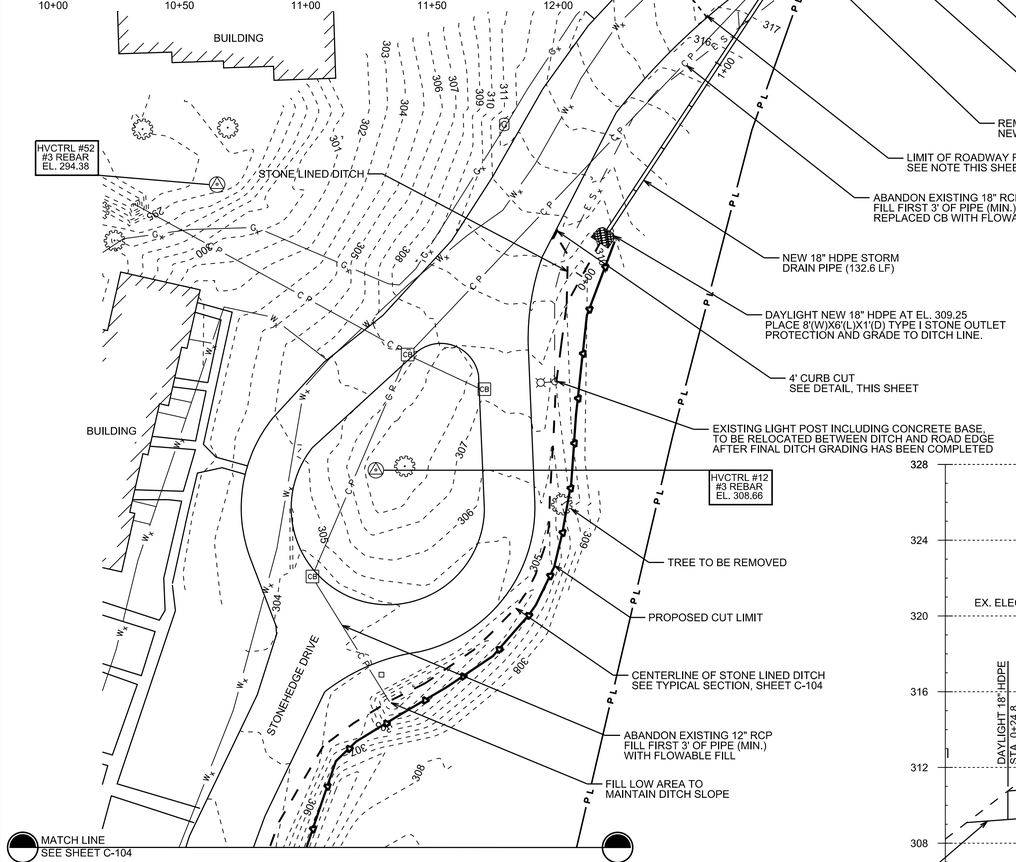

SITE PLAN

30' 20' 10' 0 30'

SCALE: 1"= 30'-0"

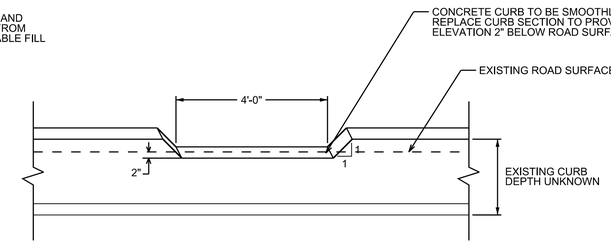

CURB CUT DETAIL

2' 1' 0 2'

SCALE: 1/2" = 1'-0"

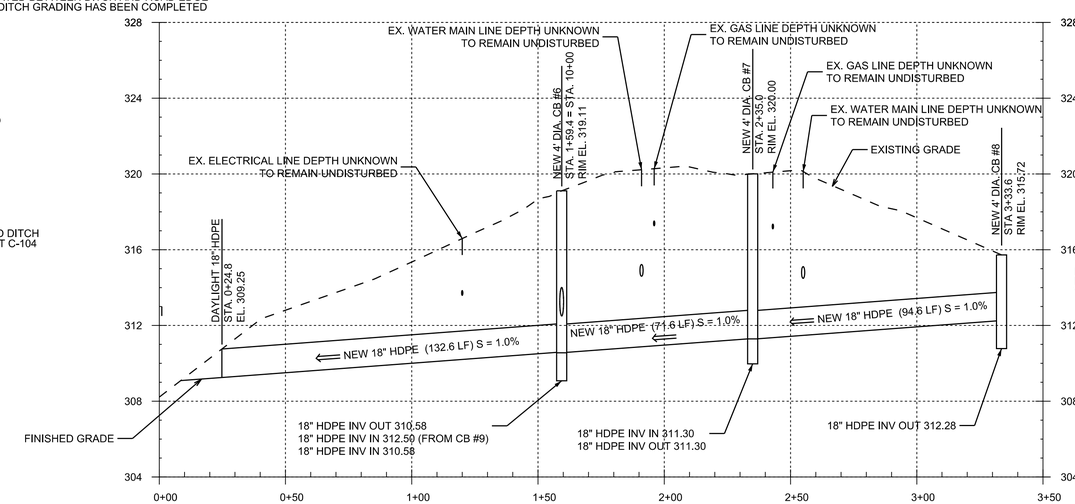

PROFILE

HORIZONTAL SCALE: 1"= 30'-0"
VERTICAL SCALE: 1"= 4'-0"

30' 20' 10' 0 30'

4' 0 1' 2' 3' 4'

STONEHEDGE KEY PLAN

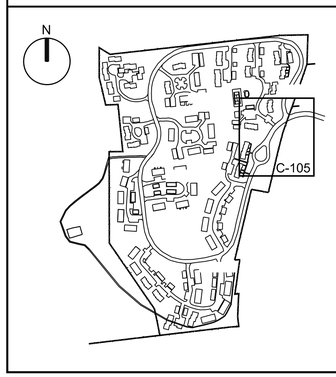

ROADWAY RECONSTRUCTION NOTE:
REMOVE PAVEMENT AND 24" OF SUBBASE MATERIAL WITHIN THE LIMITS SHOWN. REPLACE, GRADE, AND COMPACT NEW GRAVEL SUBBASE TO PROVIDE 2% MINIMUM CROSS SLOPE. PAVE WITH A 2 1/2" BASE COURSE (TYPE I) AND 1 1/2" SURFACE COURSE (TYPE III)

CATCH BASIN NOTE:
ALL CATCH BASINS ON THIS SHEET SHALL HAVE DIRECTIONAL VANE GRATES UNLESS NOTED OTHERWISE.

LEGEND (EXISTING)

- WETLANDS
- 8" APPLE, 20" PINE — TREES
- LIGHT POLE
- SEWER MANHOLE
- CATCH BASIN
- WATER SHUT OFF
- GAS SHUT OFF
- ELECTRICAL BOX
- HORIZONTAL VERTICAL CONTROL
- EDGE OF PAVEMENT
- S S_x — SEWER MAIN
- C P — STORM DRAIN
- W_x — WATER MAIN
- C_x — UNDERGROUND COMMUNICATIONS
- E_x — OVERHEAD ELECTRICAL
- E S_x — BURIED ELECTRICAL
- G_x — UNDERGROUND NATURAL GAS
- FENCE
- W — WETLAND BOUNDARY
- P L — PROPERTY LINE

LEGEND (NEW)

- LOD — LIMITS OF DISTURBANCE

NOTE: PIPE LENTHS ARE PROVIDED FOR GENERAL INFORMATION. PIPE LENGTHS SHALL BE FIELD VERIFIED BASED ON ACTUAL STRUCTURE PLACEMENT

US Army Corps of Engineers
New York District

MARK	DESCRIPTION	DATE	APPR.	MARK	DESCRIPTION	DATE	APPR.

DESIGNED BY: HLV | DATE: MAY 2015
DWN BY: ZDC | CKD BY: MTM | SOLICITATION NO.:
SUBMITTED BY: D & K | CONTRACT NO.:
FILE NAME: ...\dgn\120808C_SP-C105.dgn
SIZE: ANSI D | FORMAT: PLOTTED & KING | PLOT DATE: 5/11/2015

U. S. ARMY ENGINEER DISTRICT
NEW YORK
http://www.nan.usace.army.mil

DuBois & King INC.

STONEHEDGE
STORMWATER IMPROVEMENTS
SOUTH BURLINGTON, VERMONT

EAST
SITE PLAN AND PROFILE

SHEET REFERENCE NUMBER
C-105
SHEET 08 OF 25

Submitted by: DUBOIS & KING
...\dgn\120808C_SP-C105.dgn
Plot Date: 5/11/2015 10:37:06 AM

MAY 2010 NYD A/E BORDER

WHEELOCK BENCHMARK
UVM & SAC DISK IN LEDGE OUTCROP
ELEV.: 322.90 (NAVD 88)
HORIZONTAL DATUM: NAD 83

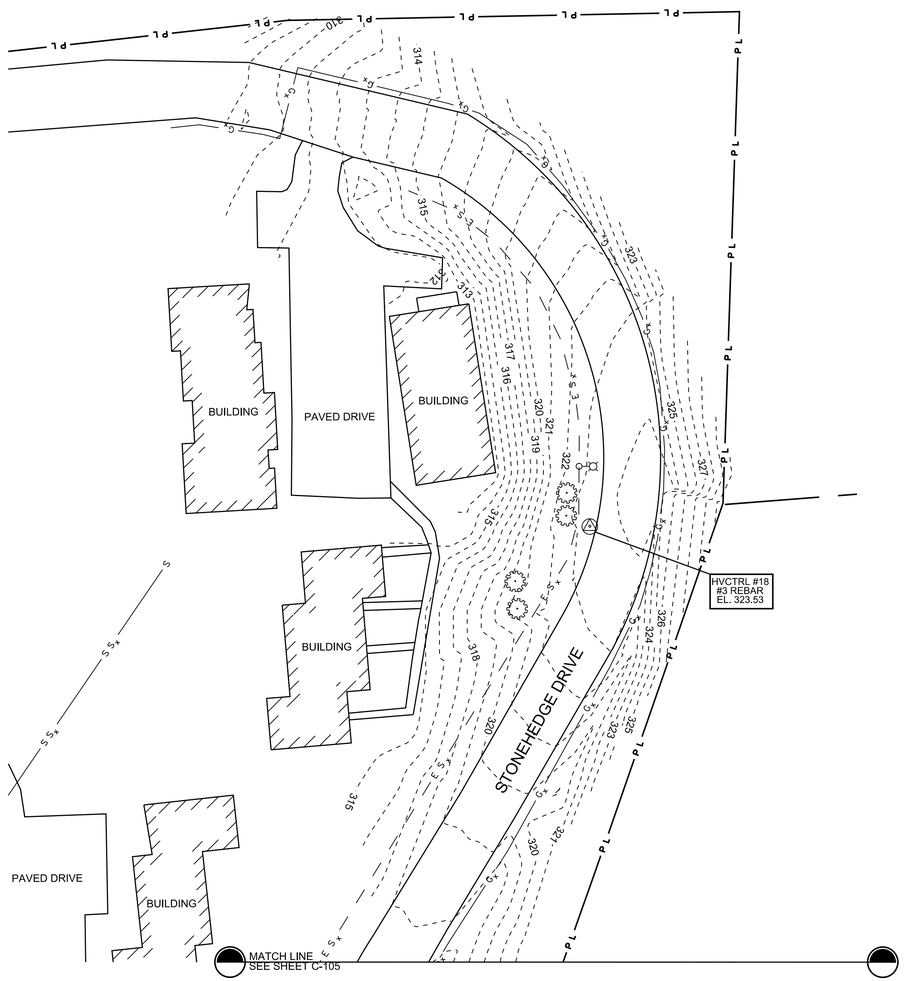

N

STONEHEDGE KEY PLAN

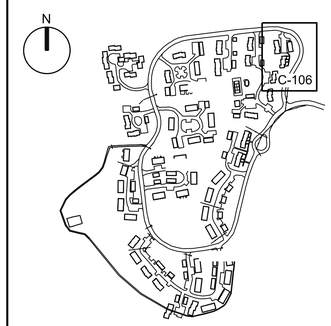

LEGEND (EXISTING)

- WETLANDS
- TREES
- LIGHT POLE
- SEWER MANHOLE
- CATCH BASIN
- WATER SHUT OFF
- GAS SHUT OFF
- ELECTRICAL BOX
- HORIZONTAL VERTICAL CONTROL
- EDGE OF PAVEMENT
- SEWER MAIN
- STORM DRAIN
- WATER MAIN
- UNDERGROUND COMMUNICATIONS
- OVERHEAD ELECTRICAL
- BURIED ELECTRICAL
- UNDERGROUND NATURAL GAS
- FENCE
- WETLAND BOUNDARY
- PROPERTY LINE

LEGEND (NEW)

- LIMITS OF DISTURBANCE

SITE PLAN

30' 20' 10' 0 30'

SCALE: 1"= 30'-0"

US Army Corps of Engineers
New York District

MARK	DESCRIPTION	DATE	APPR.	MARK	DESCRIPTION	DATE	APPR.

U. S. ARMY ENGINEER DISTRICT
NEW YORK
http://www.nan.usace.army.mil

DESIGNED BY: HLV | DATE: MAY 2015
DWN BY: ZDC | CKD BY: MTM | SOLICITATION NO.:
SUBMITTED BY: D & K | CONTRACT NO.:
FILE NAME: ...\dgn\120808c_SP-C106.dgn
SIZE: ANSI D | PLOT SCALE: 1=30' | PLOT DATE: 5/11/2015

DuBois & King inc.

STONEHEDGE
STORMWATER IMPROVEMENTS
SOUTH BURLINGTON, VERMONT

NORTH EAST
SITE PLAN

SHEET
REFERENCE
NUMBER
C-106

SHEET 09 OF 25

Submitted by: DUBOIS & KING
...\dgn\120808C_SP-C106.dgn
Plot Date: 5/11/2015 10:37:50 AM

MAY 2010 NYD A/E BORDER

LIMITS OF DISTURBANCE LAYOUT

STATION	OFFSET
0+06.2	-45.9
0+24.0	-76.2
0+78.4	-73.8
1+57.4	-115.9
1+78.1	-143.2
2+58.0	-165.0
3+63.1	-150.3
4+35.8	-105.2
4+74.7	-90.2
5+63.4	-3.4
4+81.5	-3.0
4+09.0	-22.5
2+43.3	-14.2
1+70.2	12.8
1+26.8	49.9
0+02.4	46.8

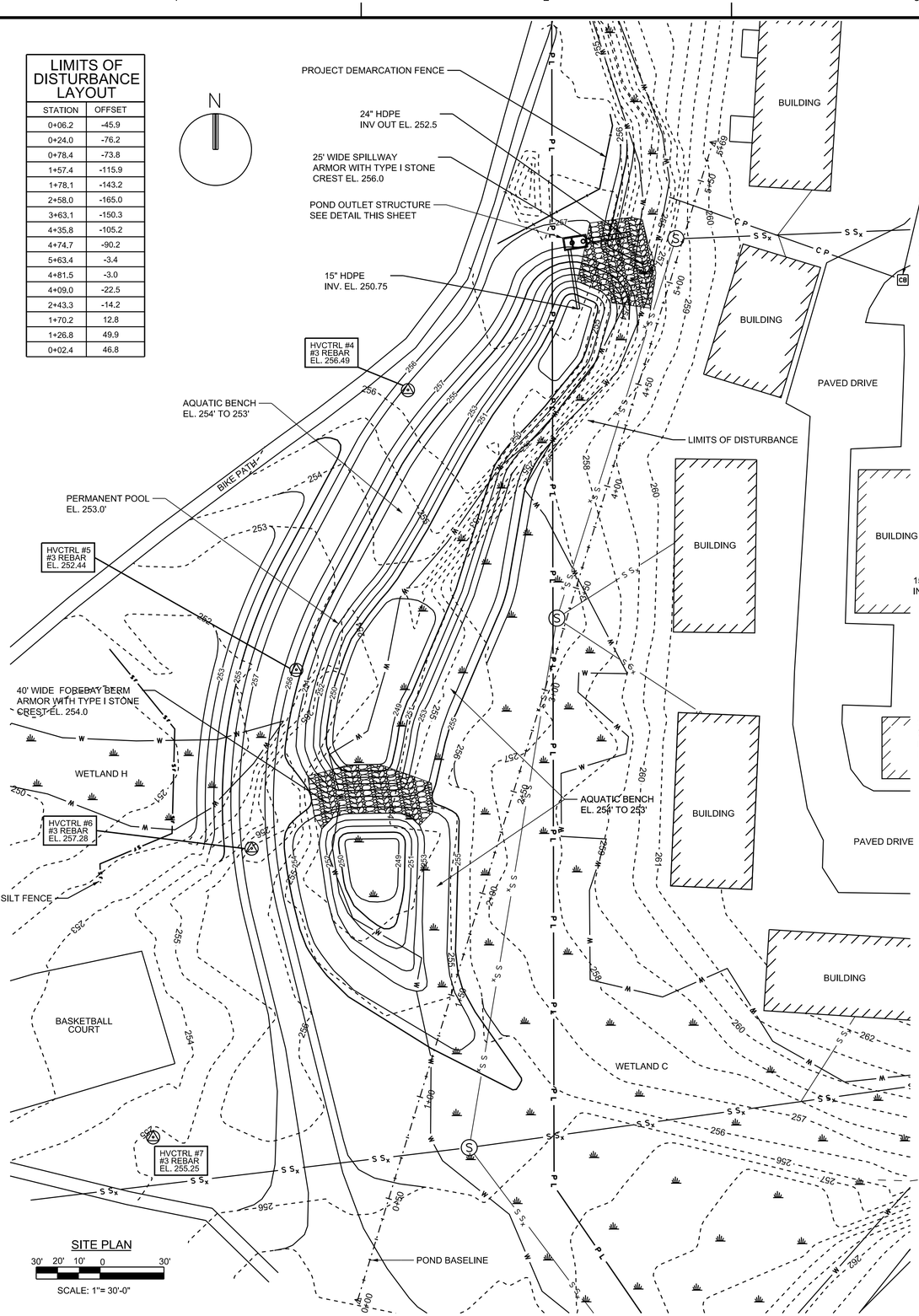

SITE PLAN

30' 20' 10' 0 30'

SCALE: 1"= 30'-0"

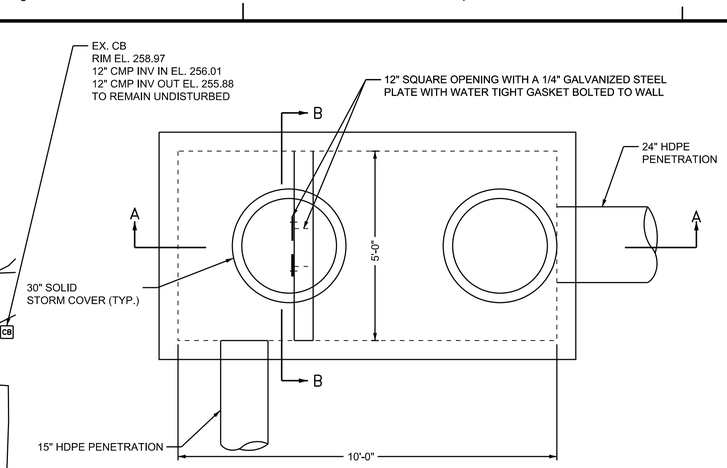

POND OUTLET STRUCTURE
PLAN

2' 1' 0 2'

SCALE: 1"= 2'-0"

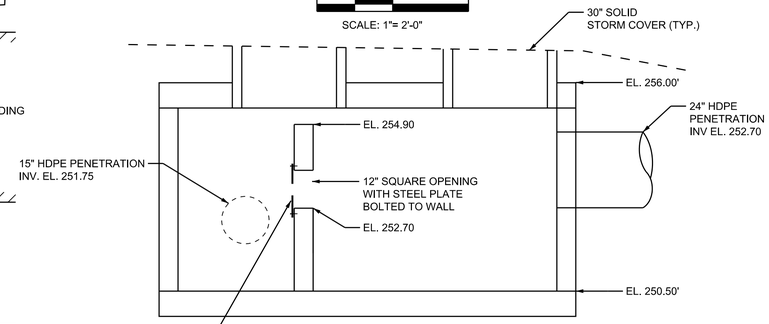

POND OUTLET STRUCTURE
SECTION A - A

2' 1' 0 2'

SCALE: 1" = 2-0"

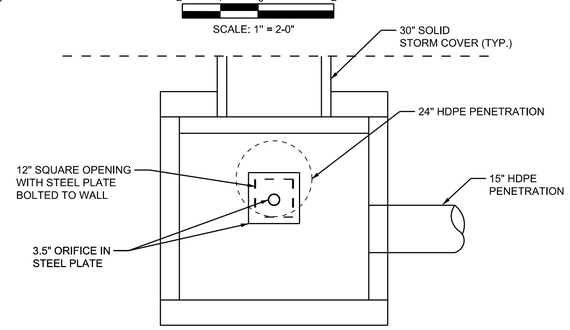

POND OUTLET STRUCTURE
SECTION B - B

2' 1' 0 2'

SCALE: 1" = 2-0"

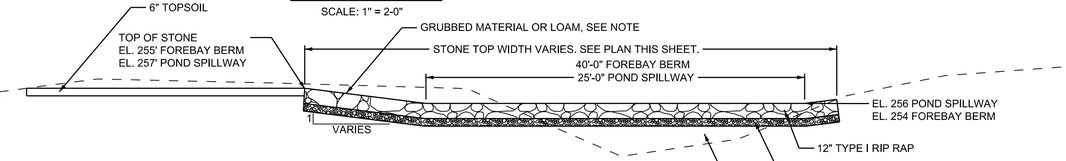

NOTE:
GRUBBED MATERIAL OR LOAM SUCH THAT STONE IS NO LONGER VISABLE, THEN SEED AND MULCH.

POND AND FOREBAY EMBANKMENT PROFILE

5' 2.5' 0 5'

SCALE: 1"= 5'-0"

STONEHEDGE KEY PLAN

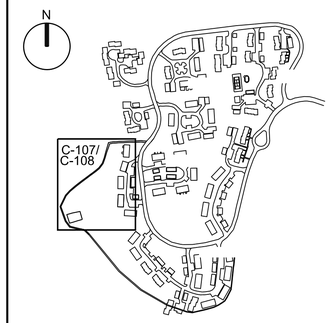

LEGEND (EXISTING)

- WETLANDS
- 8" APPLE, 20" PINE — TREES
- LIGHT POLE
- SEWER MANHOLE
- CB — CATCH BASIN
- W — WATER SHUT OFF
- G — GAS SHUT OFF
- ELECTRICAL BOX
- HORIZONTAL VERTICAL CONTROL
- EDGE OF PAVEMENT
- S Sx — SEWER MAIN
- C P — STORM DRAIN
- Wx — WATER MAIN
- Cx — UNDERGROUND COMMUNICATIONS
- Ex — OVERHEAD ELECTRICAL
- E Sx — BURIED ELECTRICAL
- Gx — UNDERGROUND NATURAL GAS
- FENCE
- W — WETLAND BOUNDARY
- PL — PROPERTY LINE

LEGEND (NEW)

- LOD — LIMITS OF DISTURBANCE

US Army Corps
of Engineers
New York District

MARK	DESCRIPTION	DATE	APPR.	MARK	DESCRIPTION	DATE	APPR.

DESIGNED BY: HLV | DATE: MAY 2015
DWN BY: ZDC | CKD BY: MTM | SOLICITATION NO.:
SUBMITTED BY: D & K | CONTRACT NO.:
FILE NAME: ...\dgn\120808C_SP-C107.dgn
SIZE: ANSI D | FILE NO. 120808C | PLOT DATE: 5/11/2015

U. S. ARMY ENGINEER DISTRICT
NEW YORK
http://www.nan.usace.army.mil

DuBois & King INC.

STONEHEDGE
STORMWATER IMPROVEMENTS
SOUTH BURLINGTON, VERMONT

POND
SITE PLAN

SHEET
REFERENCE
NUMBER
C-107

SHEET 10 OF 25

Submitted by: DUBOIS & KING
...\dgn\120808C_SP-C107.dgn
Plot Date: 5/11/2015 10:38:39 AM

MAY 2010 NYD A/E BORDER

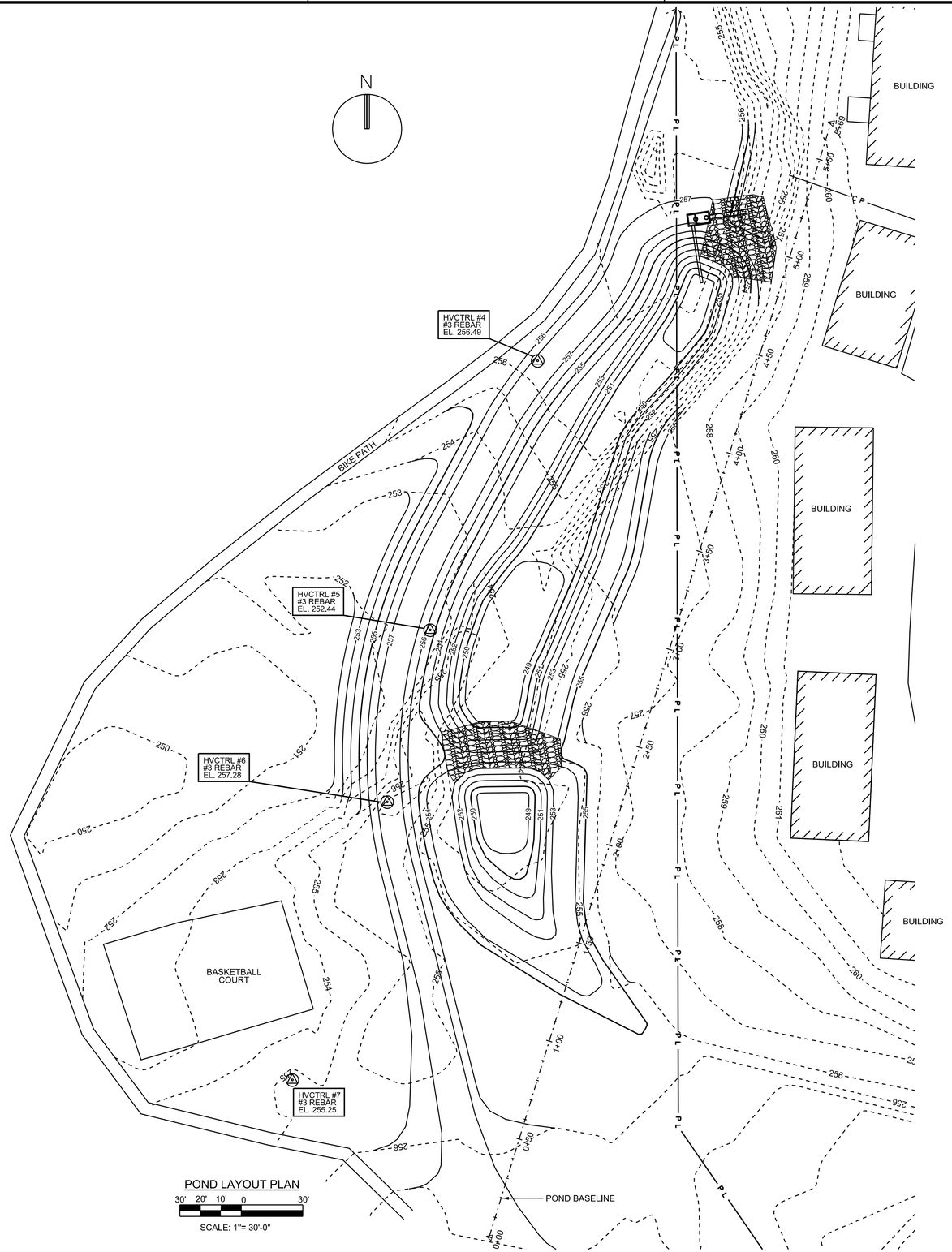

POND LAYOUT PLAN

30' 20' 10' 0 30'

SCALE: 1"= 30'-0"

POND LAYOUT

STATION	OFFSET	ELEVATION
0+50	-20.2	257
0+50	-41.0	257
0+50	-55.8	256
1+00	-46.4	256
1+00	-51.1	257
1+00	-65.4	257
1+00	-72.4	256
1+50	-34.0	253
1+50	-69.7	255
1+50	-81.1	257
1+50	-95.1	257
2+00	-16.4	254
2+00	-28.9	253
2+00	-42.4	249
2+00	-67.0	249
2+00	-80.5	253
2+00	-92.3	254
2+00	-106.5	257
2+00	-119.3	257
2+00	-140.3	252
2+23.7*	-60.2	254
2+28.5*	-61.7	254
2+50	-39.7	254
2+50	-49.7	243
2+50	-61.8	249
2+50	-88.8	249
2+50	-118.4	257
2+50	-130.5	257
2+50	-150.7	252
3+00	-38.1	254
3+00	-48.1	253
3+00	-60.2	249
3+00	-89.5	249
3+00	-102.1	253
3+00	-118.7	257
3+00	-130.7	257
3+00	-146.8	253
3+50	-35.9	254
3+50	-44.7	253
3+50	-53.7	250
3+50	-76.2	250
3+50	-85.5	253
3+50	-97.3	254
3+50	-109.6	257
3+50	-121.8	257
3+50	-134.2	254
4+00	-31.5	256
4+00	-45.4	252
4+00	-51.8	250
4+00	-65.4	250
4+00	-74.7	253
4+00	-85.1	254
4+00	-97.8	257
4+00	-110.5	257
4+00	-114.7	256
4+50	-23.4	252
4+50	-33.1	249
4+50	-46.9	249
4+50	-59.4	253
4+50	-76.2	257
4+50	-89.2	257
4+50	-93.7	256
4+99.2*	-32.7	256
5+00	-51.6	257
5+00	-79.0	257
5+00	-83.0	256
5+03.5*	-26.1	256
5+50	-26.0	256
5+50	-39.6	256
5+50	-85.7	256

*CENTER OF SPILLWAY

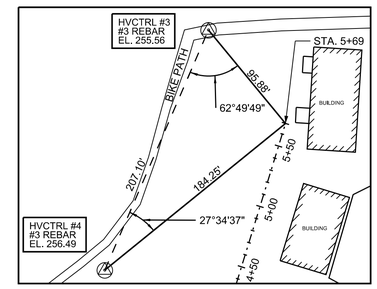

BASELINE LAYOUT

SCALE: 1" = 60'

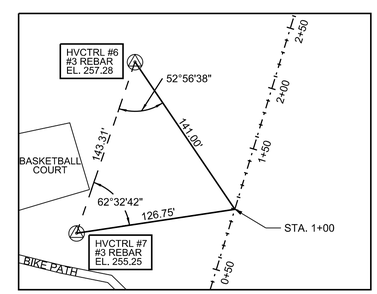

BASELINE LAYOUT

SCALE: 1" = 60'

STONEHEDGE KEY PLAN

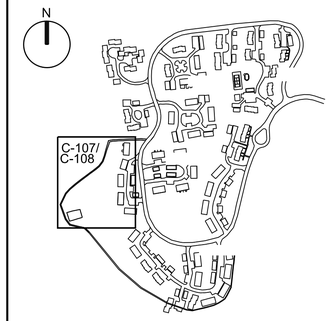

LEGEND (EXISTING)

- WETLANDS
- 6" APPLE / 20" PINE — TREES
- LIGHT POLE
- SEWER MANHOLE
- CATCH BASIN
- WATER SHUT OFF
- GAS SHUT OFF
- ELECTRICAL BOX
- HORIZONTAL VERTICAL CONTROL
- EDGE OF PAVEMENT
- S S_x — SEWER MAIN
- C P — STORM DRAIN
- W_x — WATER MAIN
- C_x — UNDERGROUND COMMUNICATIONS
- E_x — OVERHEAD ELECTRICAL
- E S_x — BURIED ELECTRICAL
- G_x — UNDERGROUND NATURAL GAS
- FENCE
- W — WETLAND BOUNDARY
- P L — PROPERTY LINE

LEGEND (NEW)

- LOD — LIMITS OF DISTURBANCE

NOTE:

1. CONTRACTOR TO USE MINIMUM OF TWO CONTROL POINTS TO ESTABLISH AND CONFIRM ELEVATION AT POND SITE AND SUBMIT RESULTS TO ENGINEER FOR APPROVAL PRIOR TO EXCAVATION.
2. OFFSETS SHOWN ON POND LAYOUT TABLE ARE PERPENDICULAR TO POND BASELINE.

US Army Corps of Engineers New York District

MARK	DESCRIPTION	DATE	APPR.	MARK	DESCRIPTION	DATE	APPR.

DESIGNED BY: HLV | DATE: MAY 2015
DWN BY: ZDC | CKD BY: MTM | SOLICITATION NO.:
SUBMITTED BY: D & K | CONTRACT NO.:
FILE NAME: ...\dgn\120808C_SP-C108.dgn
SIZE: ANSI D | PLOT SCALE: 1:1 | PLOT DATE: 5/11/2015
DuBois & King

U. S. ARMY ENGINEER DISTRICT
NEW YORK
http://www.nan.usace.army.mil

STONEHEDGE
STORMWATER IMPROVEMENTS
SOUTH BURLINGTON, VERMONT

POND
LAYOUT PLAN

SHEET REFERENCE NUMBER
C-108
SHEET 11 OF 25

Submitted by: DUBOIS & KING
...\dgn\120808C_SP-C108.dgn
Plot Date: 5/11/2015 10:39:37 AM

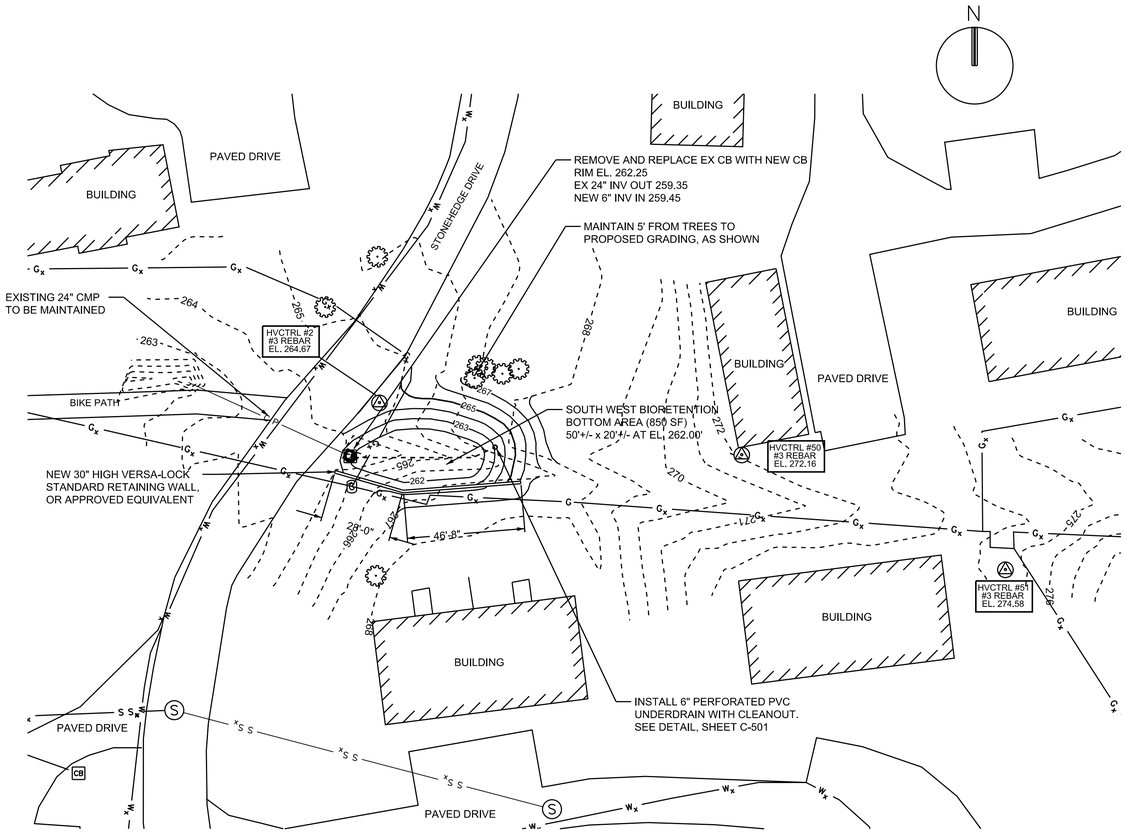

SOUTH WEST BIORETENTION AREA
SITE PLAN

30' 20' 10' 0 30'

SCALE: 1"= 30'-0"

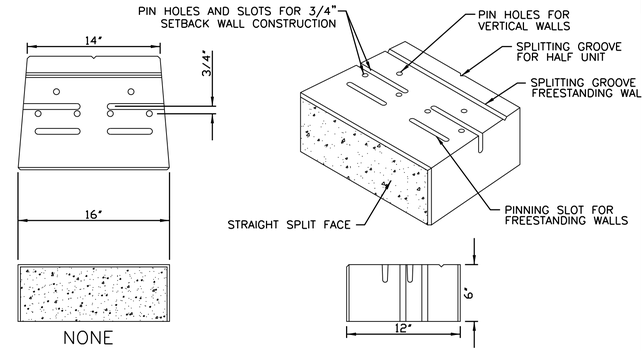

WALL UNIT DETAIL
NOT TO SCALE

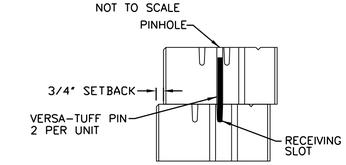

PINNING DETAIL
NOT TO SCALE

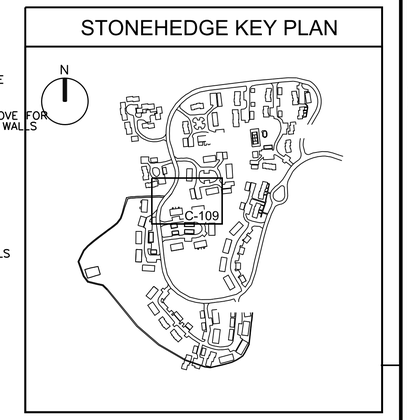

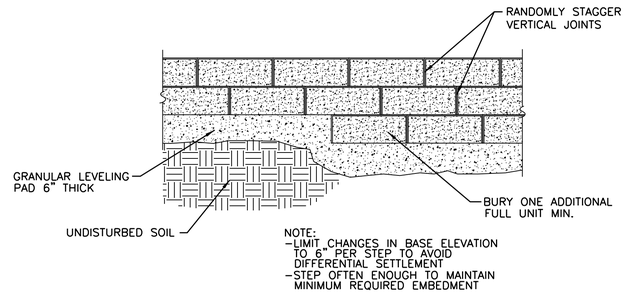

STEPPING BASE DETAIL
NOT TO SCALE

LEGEND (EXISTING)

- WETLANDS
- 6" APPLE / 20" PINE — TREES
- LIGHT POLE
- SEWER MANHOLE
- CATCH BASIN
- WATER SHUT OFF
- GAS SHUT OFF
- ELECTRICAL BOX
- HORIZONTAL VERTICAL CONTROL
- EDGE OF PAVEMENT
- $S\ S_x$ — SEWER MAIN
- C P — STORM DRAIN
- W_x — WATER MAIN
- C_x — UNDERGROUND COMMUNICATIONS
- E_x — OVERHEAD ELECTRICAL
- $E\ S_x$ — BURIED ELECTRICAL
- G_x — UNDERGROUND NATURAL GAS
- FENCE
- W — WETLAND BOUNDARY
- P L — PROPERTY LINE

LEGEND (NEW)

- LIMITS OF DISTURBANCE

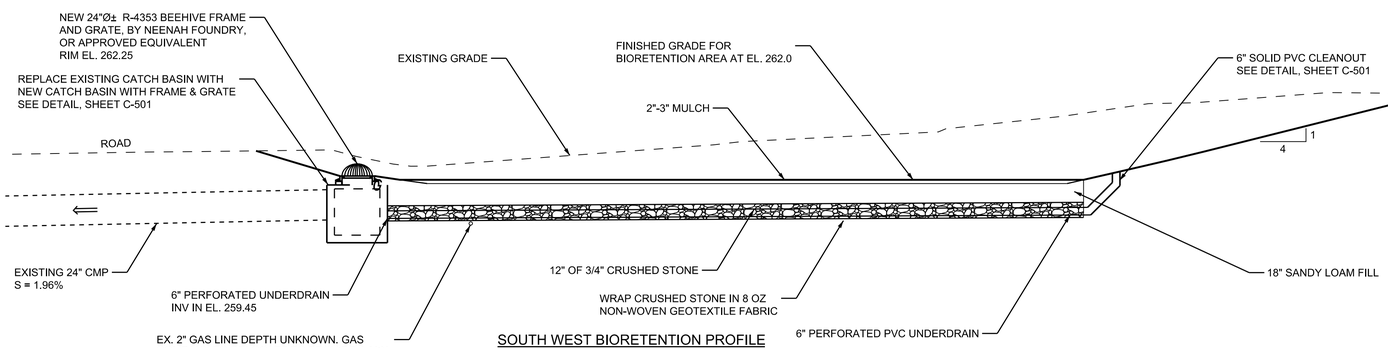

SOUTH WEST BIORETENTION PROFILE

5' 2.5' 0 5'

SCALE: 1"= 5'-0"

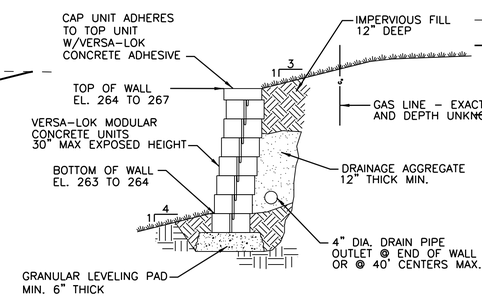

TYPICAL WALL SECTION
NOT TO SCALE

US Army Corps
of Engineers
New York District

MARK	DESCRIPTION	DATE	APPR.	MARK	DESCRIPTION	DATE	APPR.

DESIGNED BY: HLV | DATE: MAY 2015
DWN BY: ZDC | CKD BY: MTM | SOLICITATION NO.:
SUBMITTED BY: D & K | CONTRACT NO.:
FILE NAME: ...\dgn\120808C_SP-C109.dgn
SIZE: ANSI D | FORMAT: 22"x34" | PLOT DATE: 5/11/2015
DuBois & King INC.

U. S. ARMY ENGINEER DISTRICT
NEW YORK
http://www.nan.usace.army.mil

STONEHEDGE
STORMWATER IMPROVEMENTS
SOUTH BURLINGTON, VERMONT

SOUTH WEST BIORETENTION
SITE PLAN

SHEET
REFERENCE
NUMBER
C-109
SHEET 12 OF 25

MAY 2010 NYD A/E BORDER

Submitted by: DUBOIS & KING
...\dgn\120808C_SP-C109.dgn
Plot Date: 5/11/2015 10:40:35 AM

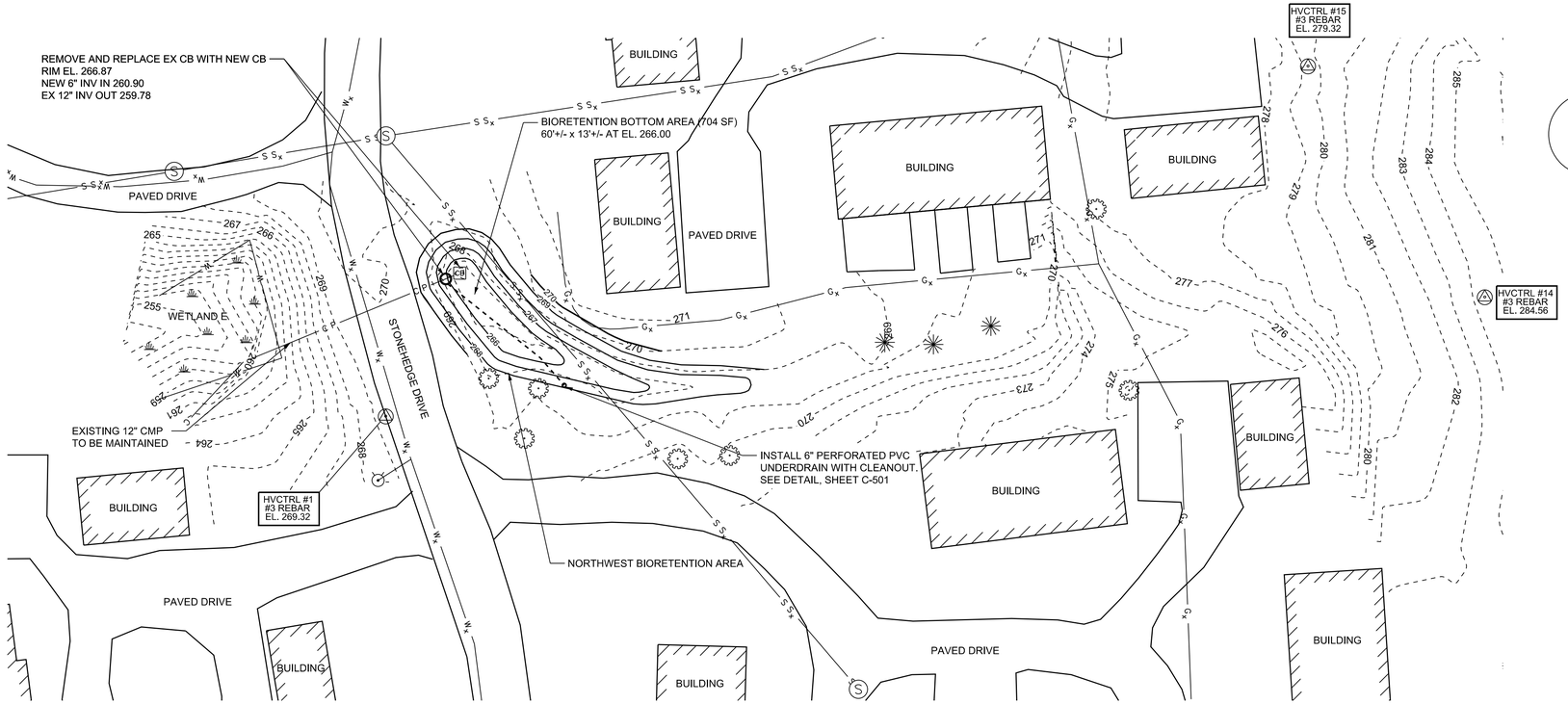

NORTH WEST BIORETENTION AREA
SITE PLAN

30' 20' 10' 0 30'

SCALE: 1" = 30'-0"

STONEHEDGE KEY PLAN

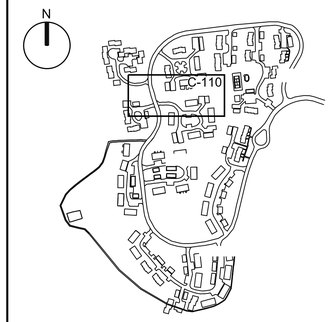

US Army Corps
of Engineers
New York District

LEGEND (EXISTING)

- WETLANDS
- 8" APPLE / 20" PINE — TREES
- LIGHT POLE
- SEWER MANHOLE
- CATCH BASIN
- WATER SHUT OFF
- GAS SHUT OFF
- ELECTRICAL BOX
- HORIZONTAL VERTICAL CONTROL
- EDGE OF PAVEMENT
- S S$_x$ — SEWER MAIN
- C P — STORM DRAIN
- W$_x$ — WATER MAIN
- C$_x$ — UNDERGROUND COMMUNICATIONS
- E$_x$ — OVERHEAD ELECTRICAL
- E S$_x$ — BURIED ELECTRICAL
- G$_x$ — UNDERGROUND NATURAL GAS
- FENCE
- W — WETLAND BOUNDARY
- P L — PROPERTY LINE

LEGEND (NEW)

- LOD — LIMITS OF DISTURBANCE

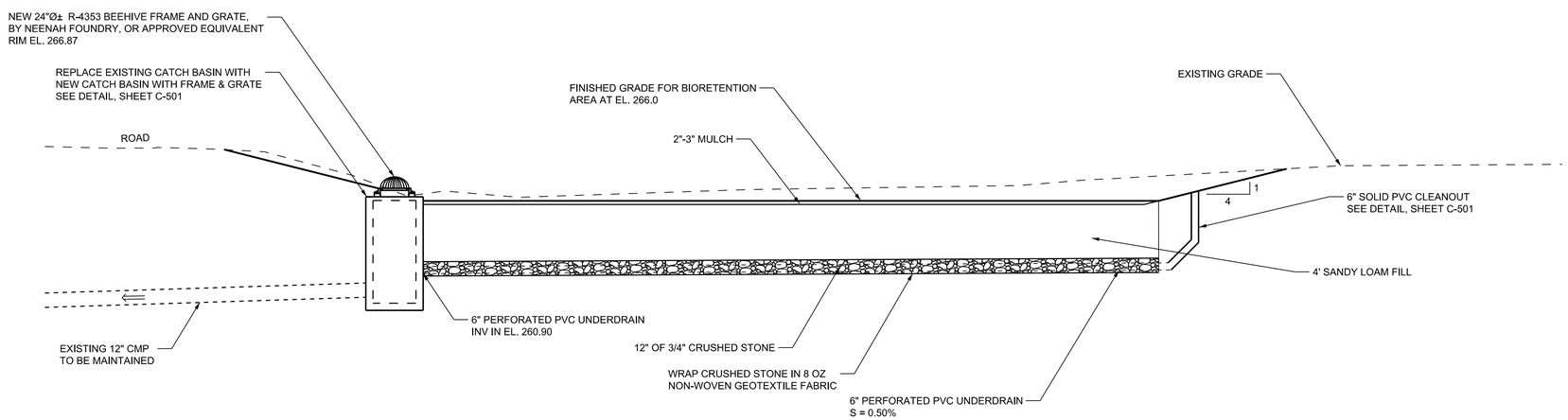

NORTH WEST BIORETENTION SECTION

5' 2.5' 0 5'

SCALE: 1" = 5'-0"

MARK	DESCRIPTION	DATE	APPR.	MARK	DESCRIPTION	DATE	APPR.

DESIGNED BY: HLV | DATE: MAY 2015
DWN BY: ZDC | CKD BY: MTM | SOLICITATION NO.:
SUBMITTED BY: D & K | CONTRACT NO.:
FILE NAME: ...\dgn\120808C_SP-C110.dgn
SIZE: ANSI D | FORMAT: Dwg-Plot Styles & Kng
PLOT DATE: 5/11/2015

U. S. ARMY ENGINEER DISTRICT
NEW YORK
http://www.nan.usace.army.mil

DuBois & King inc.

STONEHEDGE
STORMWATER IMPROVEMENTS
SOUTH BURLINGTON, VERMONT

NORTHWEST BIORETENTION AREA
SITE PLAN

SHEET REFERENCE NUMBER
C-110
SHEET 13 OF 25

MAY 2010 NYD A/E BORDER

Submitted by: DUBOIS & KING
...\dgn\120808C_SP-C110.dgn
Plot Date: 5/11/2015 10:41:22 AM

MAY 2010 NYD A/E BORDER

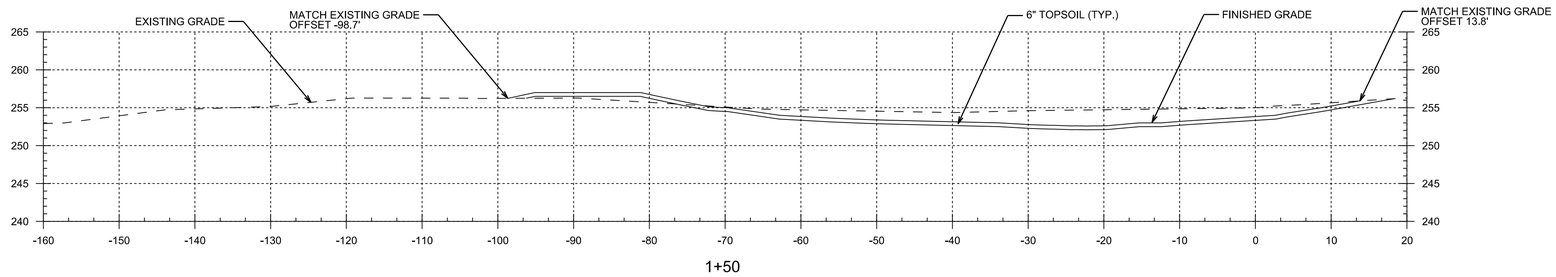

1+50

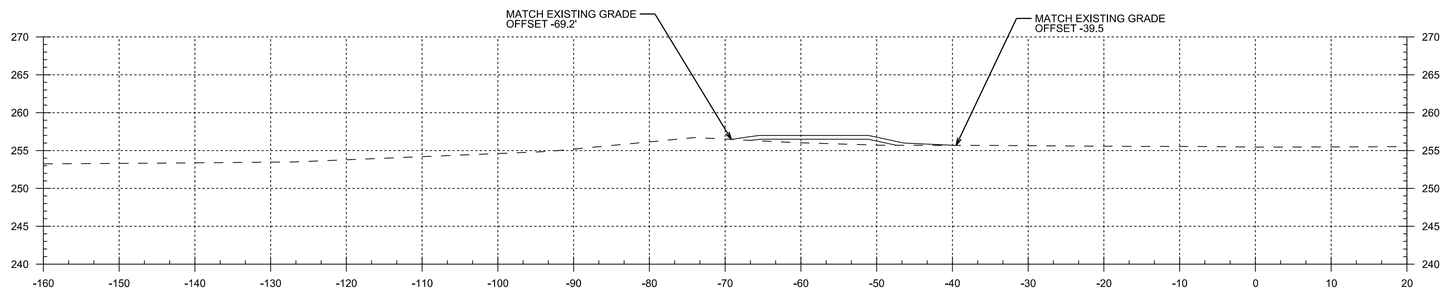

1+00

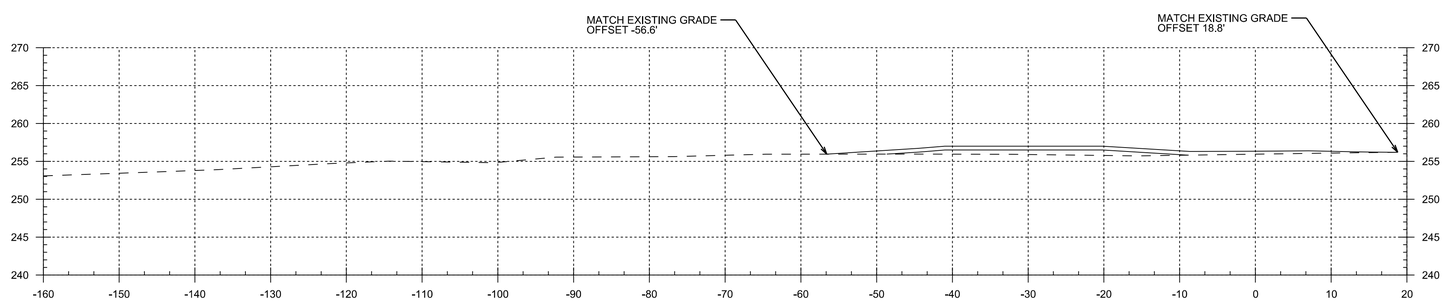

0+50

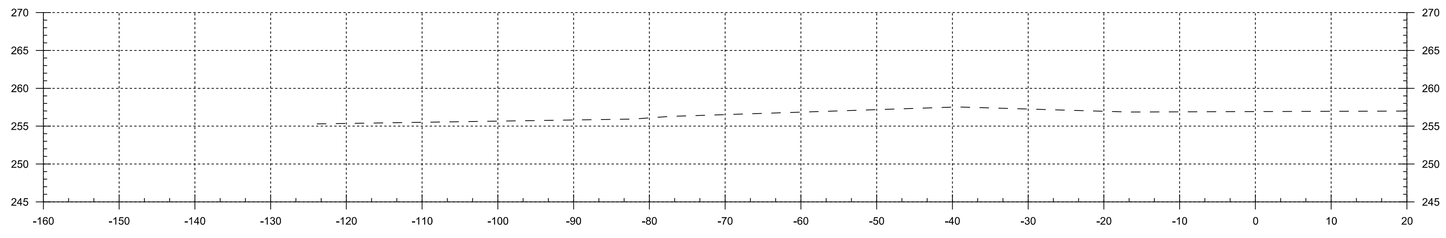

0+00

CROSS SECTIONS

10' 5' 0 10'

SCALE: 1" = 10'-0"

US Army Corps
of Engineers
New York District

MARK	DESCRIPTION	DATE	APPR.

MARK	DESCRIPTION	DATE	APPR.

DESIGNED BY: HLV
DATE: MAY 2015
DWN BY: ZDC
CKD BY: MTM
SOLICITATION NO.:
SUBMITTED BY: D & K
CONTRACT NO.:
FILE NAME: ...\dgn\120808C_C-301.dgn
SIZE: ANSI D
PROJECTION: PLANE STATE & NAD
PLOT DATE: 5/11/2015

U. S. ARMY ENGINEER DISTRICT
NEW YORK
http://www.nan.usace.army.mil

DuBois & King inc.

STONEHEDGE
STORMWATER IMPROVEMENTS
SOUTH BURLINGTON, VERMONT

POND SECTIONS
STA. 0+00 TO STA. 1+50

SHEET
REFERENCE
NUMBER
C-301
SHEET 14 OF 25

Submitted by: DUBOIS & KING Plot Date: 5/11/2015 10:42:20 AM
...\dgn\120808C_C-301.dgn

MAY 2010 NYD A/E BORDER

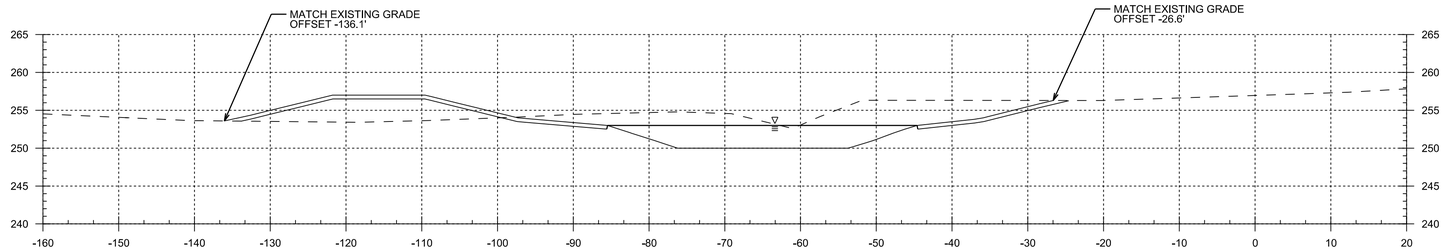

3+50

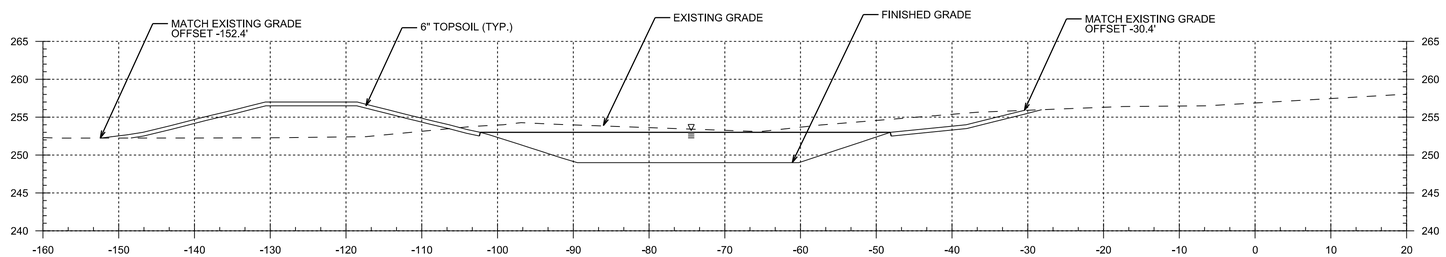

3+00

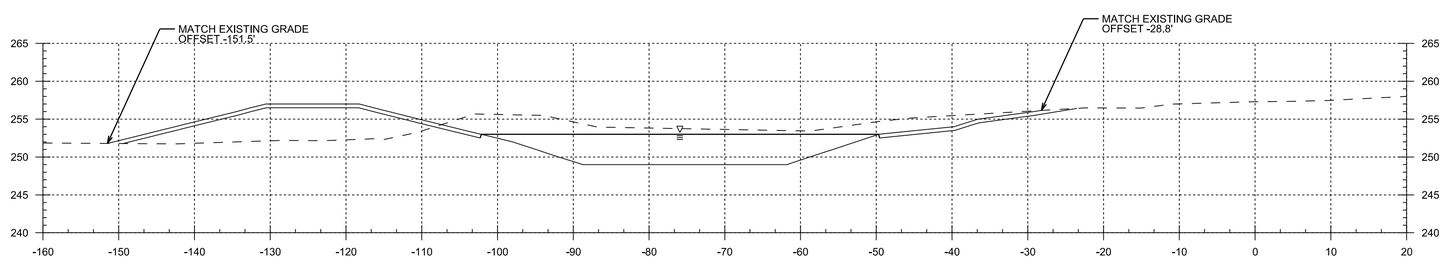

2+50

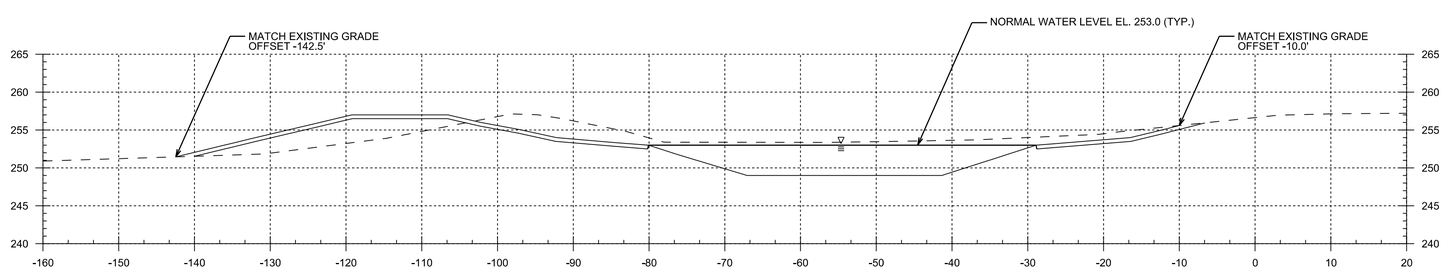

2+00

CROSS SECTIONS

10' 5' 0 10'

SCALE: 1" = 10'-0"

US Army Corps
of Engineers
New York District

MARK	DESCRIPTION	DATE	APPR.

MARK	DESCRIPTION	DATE	APPR.

U. S. ARMY ENGINEER DISTRICT
NEW YORK
http://www.nan.usace.army.mil

DuBois & King INC.

DESIGNED BY: HLV
DATE: MAY 2015
DWN BY: ZDC
CKD BY: MTM
SOLICITATION NO.:
SUBMITTED BY: D & K
CONTRACT NO.:
FILE NAME: ...\dgn\120808C_C-302.dgn
SIZE: ANSI D
PROJECTION: DUBOIS & KING
PLOT DATE: 5/11/2015

STONEHEDGE
STORMWATER IMPROVEMENTS
SOUTH BURLINGTON, VERMONT

POND SECTIONS
STA. 2+00 TO STA. 3+50

SHEET
REFERENCE
NUMBER
C-302
SHEET 15 OF 25

Submitted by: DUBOIS & KING
...\dgn\120808C_C-302.dgn
Plot Date: 5/11/2015 10:43:06 AM

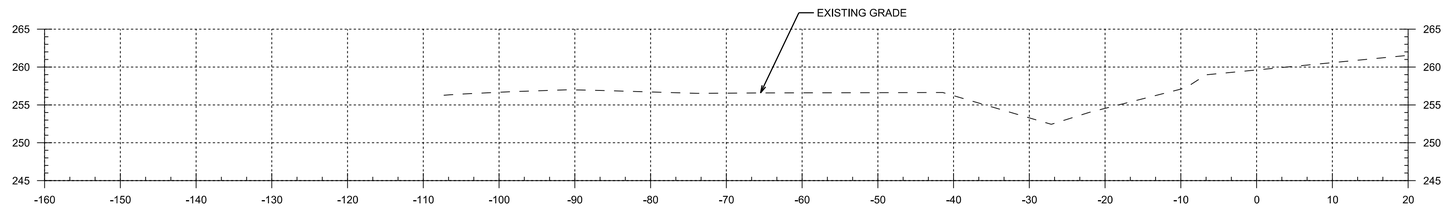

5+50

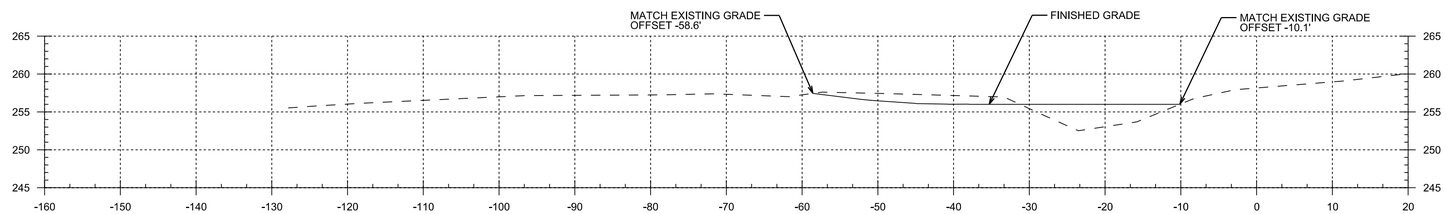

5+00

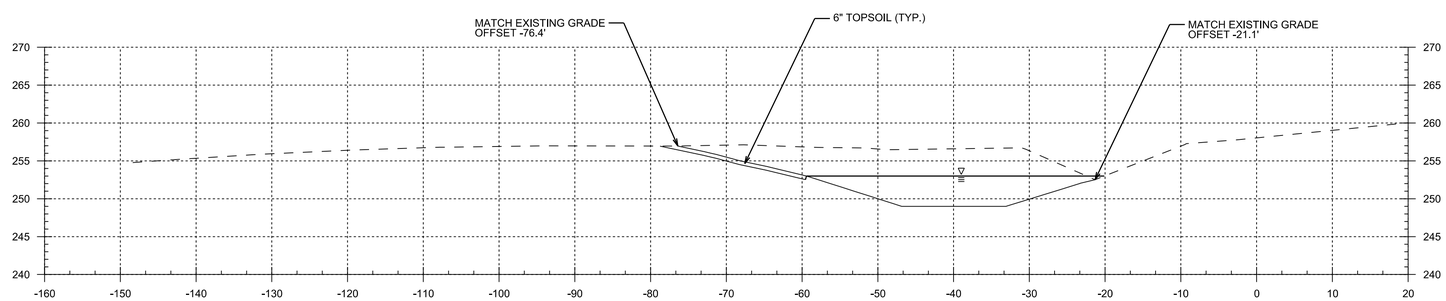

4+50

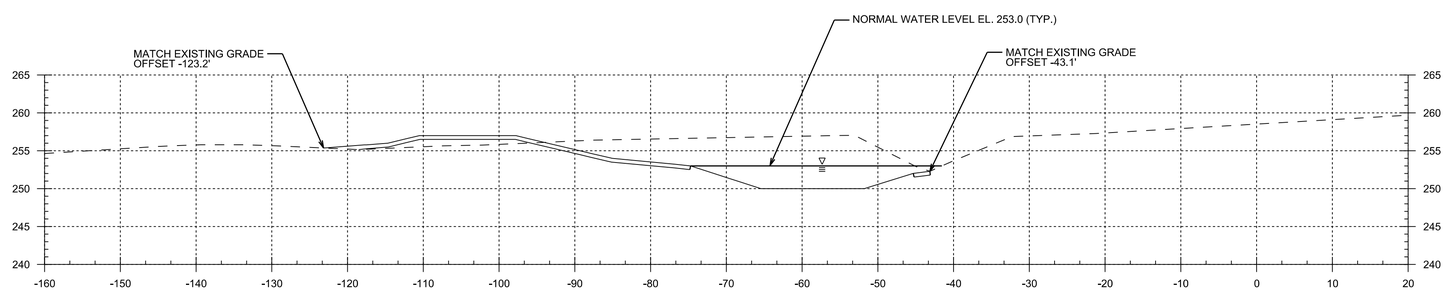

4+00

CROSS SECTIONS

10' 5' 0 10'

SCALE: 1"= 10'-0"

US Army Corps
of Engineers
New York District

MARK	DESCRIPTION	DATE	APPR.

MARK	DESCRIPTION	DATE	APPR.

DESIGNED BY: HLV
DATE: MAY 2015
DWN BY: ZDC
CKD BY: MTM
SOLICITATION NO.:
SUBMITTED BY: D & K
CONTRACT NO.:
FILE NAME: ...\dgn\120808C_C-303.dgn
SIZE: ANSI D
PLOTTED BY: DUBOIS & KING
PLOT DATE: 5/11/2015

U. S. ARMY ENGINEER DISTRICT
NEW YORK
http://www.nan.usace.army.mil

DuBois & King inc.

STONEHEDGE
STORMWATER IMPROVEMENTS
SOUTH BURLINGTON, VERMONT

POND SECTIONS
STA. 4+00 TO STA. 5+50

SHEET
REFERENCE
NUMBER
C-303
SHEET 16 OF 25

MAY 2010 NYD A/E BORDER

Submitted by: DUBOIS & KING
...\dgn\120808C_C-303.dgn

Plot Date: 5/11/2015 10:43:52 AM

MAY 2010 NYD A/E BORDER

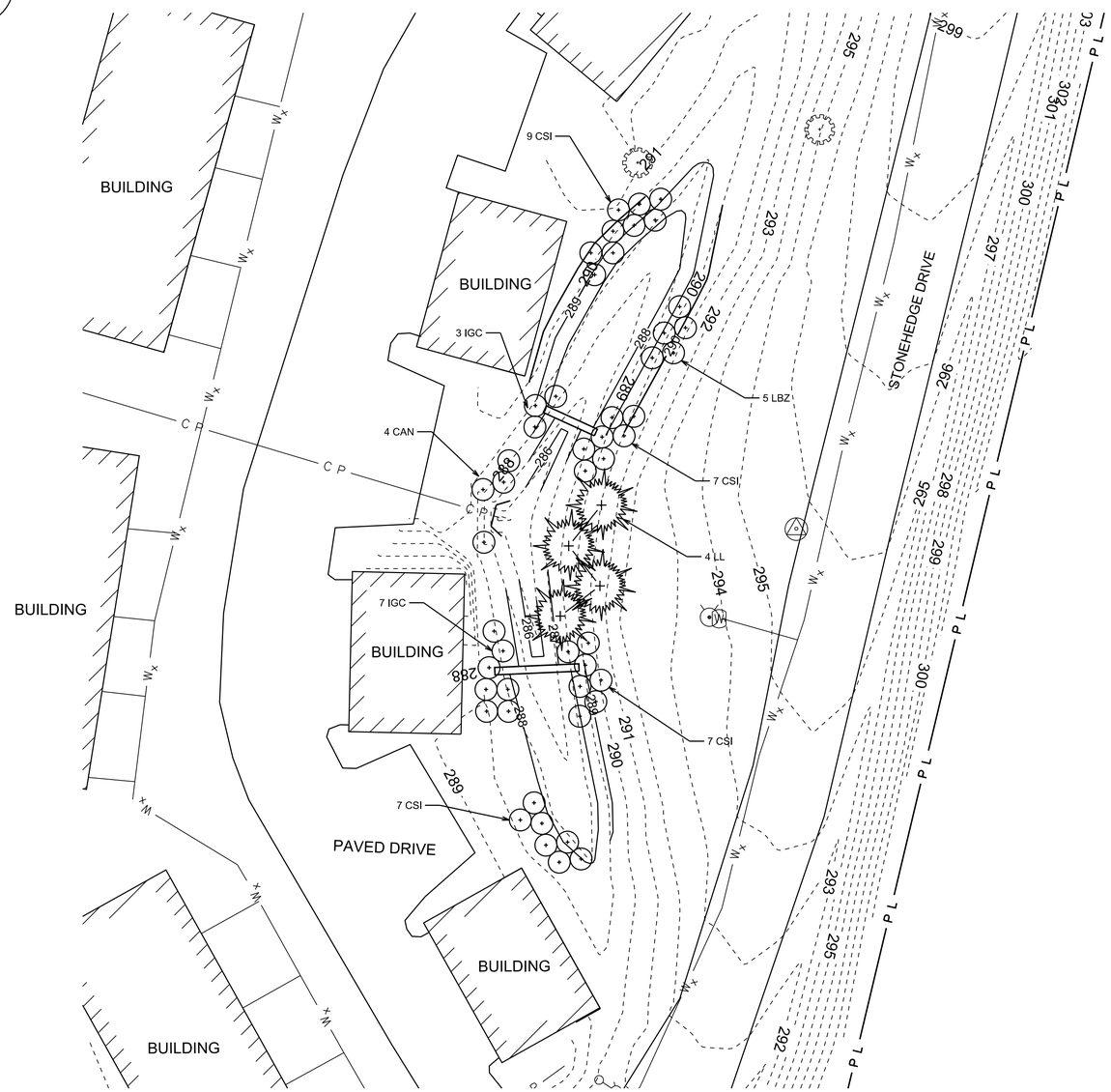

STONEHEDGE KEY PLAN

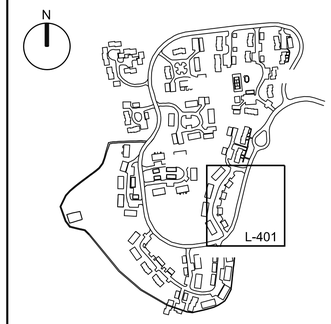

LEGEND (EXISTING)

- WETLANDS
- 6" APPLE / 20" PINE — TREES
- LIGHT POLE
- SEWER MANHOLE
- CATCH BASIN
- WATER SHUT OFF
- GAS SHUT OFF
- ELECTRICAL BOX
- HORIZONTAL VERTICAL CONTROL
- EDGE OF PAVEMENT
- S S_x — SEWER MAIN
- C P — STORM DRAIN
- W_x — WATER MAIN
- C_x — UNDERGROUND COMMUNICATIONS
- E_x — OVERHEAD ELECTRICAL
- E S_x — BURIED ELECTRICAL
- G_x — UNDERGROUND NATURAL GAS
- FENCE
- W — WETLAND BOUNDARY
- P L — PROPERTY LINE

LEGEND (NEW)

- LBZ — LIMITS OF DISTURBANCE

NOTE:
SEE LANDSCAPING DETAIL SHEET FOR PLANT LIST AND DETAILS.

EAST LANDSCAPING PLAN

20' 10' 0 20'

SCALE: 1"= 20'-0"

US Army Corps of Engineers
New York District

MARK	DESCRIPTION	DATE	APPR.	MARK	DESCRIPTION	DATE	APPR.

U. S. ARMY ENGINEER DISTRICT
NEW YORK
http://www.nan.usace.army.mil

DESIGNED BY: HLV | DATE: MAY 2015
DWN BY: ZDC | CKD BY: MTM | SOLICITATION NO.:
SUBMITTED BY: D & K | CONTRACT NO.:
FILE NAME: ...\dgn\120808C_L-401.dgn
SIZE: ANSI D | FILE NO. 120808C | PLOT DATE: 5/11/2015

DuBois & King INC.

STONEHEDGE
STORMWATER IMPROVEMENTS
SOUTH BURLINGTON, VERMONT

EAST BIORETENTION AREA
LANDSCAPING PLAN

SHEET REFERENCE NUMBER
L-401
SHEET 17 OF 25

Submitted by: DUBOIS & KING
...\dgn\120808C_L-401.dgn
Plot Date: 5/11/2015 10:46:03 AM

MAY 2010 NYD A/E BORDER

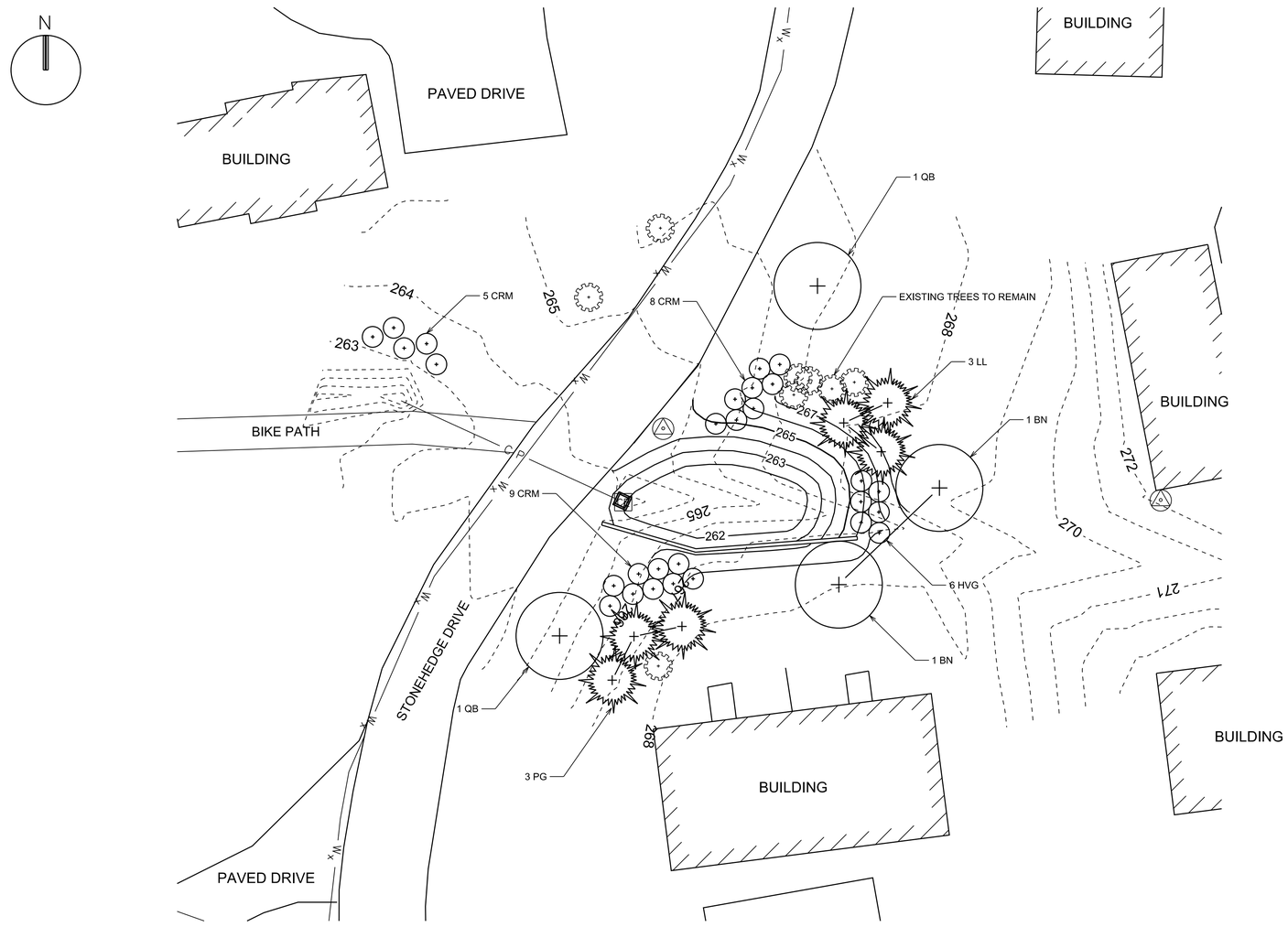

STONEHEDGE KEY PLAN

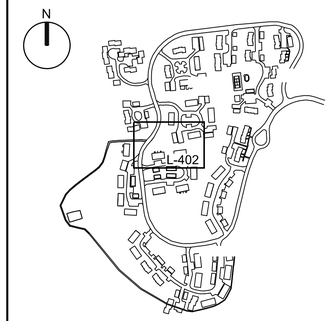

LEGEND (EXISTING)

- WETLANDS
- 8" APPLE / 20" PINE — TREES
- LIGHT POLE
- SEWER MANHOLE
- CATCH BASIN
- WATER SHUT OFF
- GAS SHUT OFF
- ELECTRICAL BOX
- HORIZONTAL VERTICAL CONTROL
- EDGE OF PAVEMENT
- S S_x — SEWER MAIN
- C P — STORM DRAIN
- W_x — WATER MAIN
- C_x — UNDERGROUND COMMUNICATIONS
- E_x — OVERHEAD ELECTRICAL
- E S_x — BURIED ELECTRICAL
- G_x — UNDERGROUND NATURAL GAS
- FENCE
- W — WETLAND BOUNDARY
- P L — PROPERTY LINE

LEGEND (NEW)

- LOD — LIMITS OF DISTURBANCE

NOTE:
SEE LANDSCAPING DETAIL SHEET FOR PLANT LIST AND DETAILS.

WEST LANDSCAPING PLAN

20' 10' 0 20'

SCALE: 1"= 20'-0"

US Army Corps of Engineers
New York District

MARK	DESCRIPTION	DATE	APPR.	MARK	DESCRIPTION	DATE	APPR.

DESIGNED BY: HLV | DATE: MAY 2015
DWN BY: ZDC | CKD BY: MTM | SOLICITATION NO.:
SUBMITTED BY: D & K | CONTRACT NO.:
FILE NAME: ...\dgn\120808C_L-402.dgn
SIZE: ANSI D | PLOTTED BY: DUBOIS & KING | PLOT DATE: 5/11/2015

U. S. ARMY ENGINEER DISTRICT
NEW YORK
http://www.nan.usace.army.mil

DuBois & King inc.

STONEHEDGE
STORMWATER IMPROVEMENTS
SOUTH BURLINGTON, VERMONT

SOUTH WEST BIORETENTION AREA
LANDSCAPING PLAN

SHEET REFERENCE NUMBER
L-402
SHEET 18 OF 25

Submitted by: DUBOIS & KING
...\dgn\120808C_L-402.dgn
Plot Date: 5/11/2015 10:46:44 AM

MAY 2010 NYD A/E BORDER

STONEHEDGE KEY PLAN

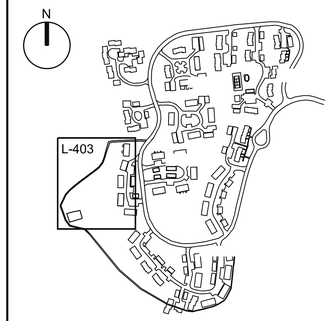

LEGEND (EXISTING)

- WETLANDS
- 8" APPLE / 20" PINE — TREES
- LIGHT POLE
- SEWER MANHOLE
- CATCH BASIN
- WATER SHUT OFF
- GAS SHUT OFF
- ELECTRICAL BOX
- HORIZONTAL VERTICAL CONTROL
- EDGE OF PAVEMENT
- S S_x — SEWER MAIN
- C P — STORM DRAIN
- W_x — WATER MAIN
- C_x — UNDERGROUND COMMUNICATIONS
- E_x — OVERHEAD ELECTRICAL
- E S_x — BURIED ELECTRICAL
- G_x — UNDERGROUND NATURAL GAS
- FENCE
- W — WETLAND BOUNDARY
- P L — PROPERTY LINE

LEGEND (NEW)

- LOD — LIMITS OF DISTURBANCE

NOTE:
SEE LANDSCAPING DETAIL SHEET FOR PLANT LIST AND DETAILS.

POND LANDSCAPING PLAN

30' 20' 10' 0 30'

SCALE: 1"= 30'-0"

US Army Corps of Engineers
New York District

MARK	DESCRIPTION	DATE	APPR.	MARK	DESCRIPTION	DATE	APPR.

DESIGNED BY: HLV | DATE: MAY 2015
DWN BY: ZDC | CKD BY: MTM | SOLICITATION NO.:
SUBMITTED BY: D & K | CONTRACT NO.:
FILE NAME: ...\dgn\120808C_L-403.dgn
SIZE: ANSI D | PLOTTED BY: DUBOIS & KING | PLOT DATE: 5/11/2015

U. S. ARMY ENGINEER DISTRICT
NEW YORK
http://www.nan.usace.army.mil

DuBois & King inc.

STONEHEDGE
STORMWATER IMPROVEMENTS
SOUTH BURLINGTON, VERMONT

POND
LANDSCAPE PLAN

SHEET REFERENCE NUMBER
L-403
SHEET 19 OF 25

Submitted by: DUBOIS & KING
...\dgn\120808C_L-403.dgn
Plot Date: 5/11/2015 10:47:27 AM

MAY 2010 NYD A/E BORDER

STONEHEDGE KEY PLAN

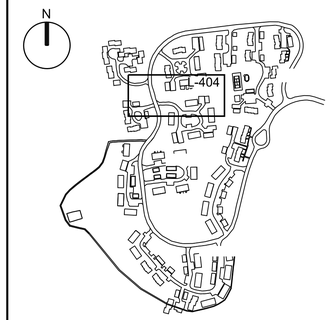

LEGEND (EXISTING)

- WETLANDS
- 8" APPLE / 20" PINE — TREES
- LIGHT POLE
- SEWER MANHOLE
- CATCH BASIN
- WATER SHUT OFF
- GAS SHUT OFF
- ELECTRICAL BOX
- HORIZONTAL VERTICAL CONTROL
- EDGE OF PAVEMENT
- S S_x — SEWER MAIN
- C P — STORM DRAIN
- W_x — WATER MAIN
- C_x — UNDERGROUND COMMUNICATIONS
- E_x — OVERHEAD ELECTRICAL
- E S_x — BURIED ELECTRICAL
- G_x — UNDERGROUND NATURAL GAS
- FENCE
- W — WETLAND BOUNDARY
- P L — PROPERTY LINE

LEGEND (NEW)

- LOD — LIMITS OF DISTURBANCE

NOTE:
SEE LANDSCAPING DETAIL SHEET FOR PLANT LIST AND DETAILS.

NORTH WEST LANDSCAPING PLAN

20' 10' 0 20'

SCALE: 1"= 20'-0"

US Army Corps of Engineers
New York District

MARK	DESCRIPTION	DATE	APPR.	MARK	DESCRIPTION	DATE	APPR.

DESIGNED BY: HLV
DWN BY: ZDC
CKD BY: MTM
SUBMITTED BY: D & K
DATE: MAY 2015
SOLICITATION NO.:
CONTRACT NO.:
FILE NAME: ...\dgn\120808C_L-404.dgn
SIZE: ANSI D
PLOTTED BY: DUBOIS & KING
PLOT DATE: 5/11/2015

U. S. ARMY ENGINEER DISTRICT
NEW YORK
http://www.nan.usace.army.mil

DuBois & King inc.

STONEHEDGE
STORMWATER IMPROVEMENTS
SOUTH BURLINGTON, VERMONT

NORTH WEST BIORETENTION AREA
LANDSCAPING PLAN

SHEET REFERENCE NUMBER
L-404
SHEET 20 OF 25

Submitted by: DUBOIS & KING
...\dgn\120808C_L-404.dgn
Plot Date: 5/11/2015 10:48:08 AM

MAY 2010 NYD A/E BORDER

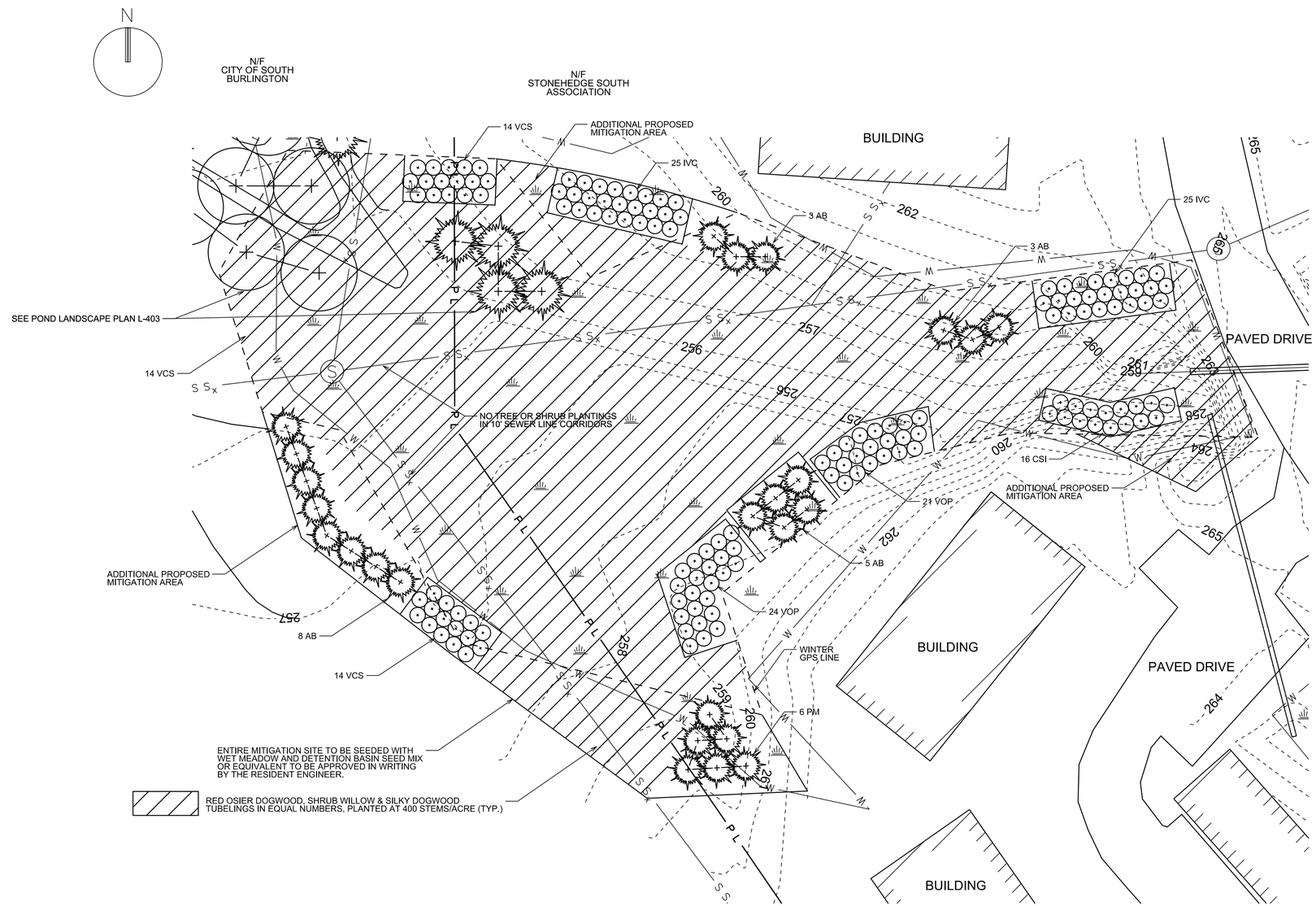

STONEHEDGE KEY PLAN

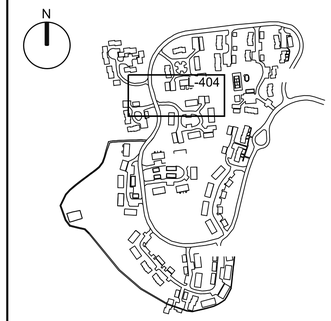

US Army Corps
of Engineers
New York District

LEGEND (EXISTING)

- WETLANDS
- 8" APPLE / 20" PINE — TREES
- LIGHT POLE
- SEWER MANHOLE
- CATCH BASIN
- WATER SHUT OFF
- GAS SHUT OFF
- ELECTRICAL BOX
- HORIZONTAL VERTICAL CONTROL
- EDGE OF PAVEMENT
- S S_x — SEWER MAIN
- C P — STORM DRAIN
- W_x — WATER MAIN
- C_x — UNDERGROUND COMMUNICATIONS
- E_x — OVERHEAD ELECTRICAL
- E S_x — BURIED ELECTRICAL
- G_x — UNDERGROUND NATURAL GAS
- FENCE
- W — WETLAND BOUNDARY
- P L — PROPERTY LINE

LEGEND (NEW)

- LOD — LIMITS OF DISTURBANCE

NOTE:
SEE LANDSCAPING DETAIL SHEET FOR PLANT LIST AND DETAILS.

WETLAND MITIGATION SITE

20' 10' 0 20'

SCALE: 1"= 20'-0"

MARK	DESCRIPTION	DATE	APPR.	MARK	DESCRIPTION	DATE	APPR.

U. S. ARMY ENGINEER DISTRICT
NEW YORK
http://www.nan.usace.army.mil

DuBois & King INC.

DESIGNED BY: HLV | DATE: MAY 2015
DWN BY: ZDC | CKD BY: MTM | SOLICITATION NO.:
SUBMITTED BY: D & K | CONTRACT NO.:
FILE NAME: ...\dgn\120808C_L-405.dgn
SIZE: ANSI D | FSTOP: 1 | PLOTTED BY: DUBOIS & KING | PLOT DATE: 5/11/2015

STONEHEDGE
STORMWATER IMPROVEMENTS
SOUTH BURLINGTON, VERMONT

WETLAND MITIGATION
LANDSCAPING PLAN

SHEET REFERENCE NUMBER
L-405
SHEET 21 OF 25

Submitted by: DUBOIS & KING
...\dgn\120808C_L-405.dgn
Plot Date: 5/11/2015 10:48:59 AM

PLANT LIST

QUANTITY	UNIT	KEY	BOTANICAL NAME	COMMON NAME	SIZE	ROOT	REMARKS
TREES - DECIDUOUS							
15	EA	AR	ACER RUBRUM	RED MAPLE	2" CAL.	B&B	
6	EA	BN	BETULA NIGRA	RIVER BIRCH	2" CAL.	B&B	
4	EA	BNC	BETULA NIGRA	RIVER BIRCH	12' HT.	B&B	3 STEM CLUMP
5	EA	CO	CELTIC OCCIDENTALIS	HACKBERRY	2" CAL.	B&B	
18	EA	QB	QUERCUS BICOLOR	WHITE OAK	2" CAL.	B&B	
9	EA	UA	ULMUS AMERICANA PRINCETON	PRINCETON ELM	2" CAL.	B&B	
TREES - CONIFEROUS							
32	EA	AB	ABIES BALSAMEA	BALSAM FIR	5' HT.	B&B	
26	EA	LL	LARIX LARICINA	AMERICAN LARCH	5' HT.	B&B	
20	EA	PG	PICEA GLAUCA	WHITE SPRUCE	5' HT.	B&B	
26	EA	PS	PINUS STROBUS	WHITE PINE	5' HT.	B&B	
6	EA	PM	PICEA MARIANA	BLACK SPRUCE	5' HT.	B&B	
SHRUBS							
30	EA	AMC	ARONIA MELANOCARPA	AUTUMN MAGIC BLACK CHOKEBERRY	24"	NO. 3 CONT.	
34	EA	CAN	CLETHERA ALNIFOLIA	SUMMERSWEET	24"	B&B	
11	EA	COD	CEPHALANTHUS OCCIDENTALIS	BUTTONBUSH	24"	NO. 3 CONT.	
34	EA	CRM	CORNUS RACEMOSA	GRAY DOGWOOD	3'	B&B	
48	EA	CSI	CORNUS SERICEA INSANTI	INSNTI DOGWOOD	3'	B&B	
5	EA	HVG	HAMAMELIS VIGINIANA	COMMON WITCHHAZEL	3'	B&B	
27	EA	IGC	ILEX GLABRA 'COMPACTA'	COMPACT INKBERRY	24"	B&B	
50	EA	IVC	ILEX VERTICILLATA	WINTER BERRY	3'	B&B	
5	EA	LBZ	LINDERA BENZOIN	SPICE BUSH	3'	B&B	
32	EA	VCS	VIBURNUM CASSINOIDES	WILD RAISIN	3'	B&B	
45	EA	VOP	VIBURNUM OPULUS	HIGHBUSH CRANBERRY	3'	B&B	
SEEDS							
30	LB	WMD	MIX OF SPECIES	WET MEADOW & DETENTION BASIN SEED MIX	-	-	
TUBELINGS							
260	EA	TBL	MIX OF SPECIES	TUBELING SHRUBS	1'	TUBES	

WET MEADOW & DETENTION BASIN SEED MIX		
BOTANICAL NAME	COMMON NAME	PERCENTAGE
Elymus virginicus	Virginia wild rye	29.70%
Panicum virgatum	Switchgrass	24.96%
Festuca rubra	Red fescue	23.84%
Carex vulpinoidea	Fox sedge	9.78%
Verbena hastate	Blue vervain	2.93%
Onoclea sensibilis	Sensitive fern	0.99%
Scirpus atrovirens	Green bulrush	0.98%
Scirpus cyperinus	Wool grass	0.96%
Bidens frondosa	Devil's beggartick	0.93%
Eupatoriadelphus maculatus	Spotted joe-pye weed	0.90%
Eupatorium perfoliatum	Boneset	0.66%
Juncus effuses	Soft rush	0.47%
Symphyotrichum nova-angliae	New England aster	0.42%

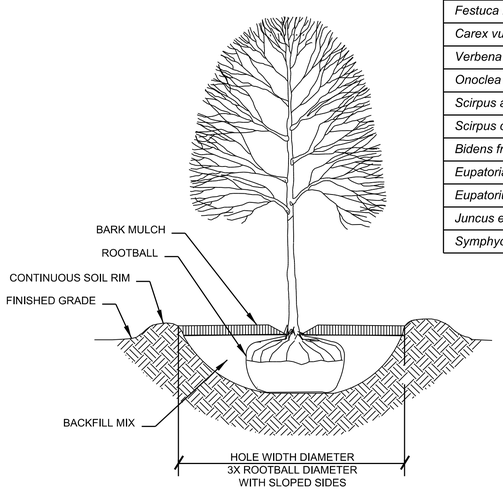

DECIDUOUS TREE PLANTING DETAIL
NOT TO SCALE

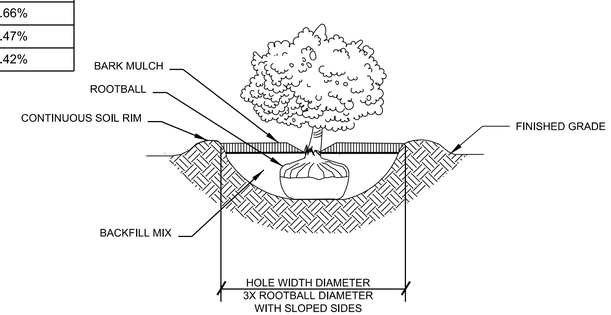

SHRUB PLANTING DETAIL
NOT TO SCALE

CONSTRUCTION NOTES

1. THE CONTRACTOR SHALL MINIMIZE DISTURBANCE TO ALL EXISTING TREES, SHRUBS, WETLAND, TURF AND OTHER VEGETATED AREAS WITHIN THE CONSTRUCTION LIMITS DURING THE PROJECT CONSTRUCTION PERIOD.
2. LIMITS OF ALL LANDSCAPE CONSTRUCTION ACTIVITIES SHALL NOT ENCROACH WITHIN 10' OF ANY EXISTING TREE LINE UNLESS OTHERWISE DIRECTED BY THE RESIDENT ENGINEER.
3. ALL DISTURBED AREAS SHALL BE SEEDED AND MULCHED AS SPECIFIED, WITHIN 7 DAYS OF FINAL GRADING UNLESS OTHERWISE DIRECTED BY THE RESIDENT ENGINEER.
4. ALL PLANTING LOCATIONS SHALL BE STAKED OUT PRIOR TO PLANTING. THE RESIDENT ENGINEER IN CONSULTATION WITH THE DESIGNER'S FIELD NATURALIST MAY ADJUST THE STAKES, AS NEEDED PRIOR TO INSTALLATION. THE CONTRACTOR SHALL BE RESPONSIBLE FOR MAINTAINING THE STAKES DURING CONSTRUCTION.
5. ALL LANDSCAPE CONSTRUCTION ACTIVITIES SHALL BE CONFINED TO WITHIN THE LIMITS OF DISTURBANCE AS IDENTIFIED ON THE PLANS OR AS OTHERWISE DIRECTED BY THE RESIDENT ENGINEER. THE CONTRACTOR SHALL NOT PLACE EQUIPMENT OR PERFORM WORK ON ADJACENT PROPERTIES WITHOUT WRITTEN PERMISSION FROM THE LANDOWNER AND RESIDENT ENGINEER.
6. THE CONTRACTOR SHALL VERIFY ALL PLANTING LOCATIONS AND QUANTITIES WITH THE RESIDENT ENGINEER PRIOR TO THE PLANTING. ADJUSTMENTS TO THE PLANTING DESIGN AND LAYOUT MAY BE REQUIRED BASED UPON ACTUAL FIELD CONDITIONS. QUANTITIES SHOWN ARE ESTIMATES ONLY AND ARE SUBJECT TO CHANGE.

GENERAL NOTES FOR PLANTING

1. SETTING PLANTS: PLACE ROOTBALL ON TOP OF STABLE SOIL SO THAT THE TRUNK FLARE/ROOTBALL IS 1 TO 2 INCHES HIGHER THAN FINISHED GRADE, AVOID PLANTING TOO DEEP, REMOVE TWINE AND BURLAP FROM TOP HALF OF ROOTBALL, IF SYNTHETIC, REMOVE WRAP OR CONTAINER, REMOVE THE TOP HALF OF WIRE BASKET.
2. CONTINUOUS SOIL RIM: FORM A 3 INCHES HIGH CONTINUOUS SOIL RIM AROUND TREES AND SHRUBS, THE DIAMETER OF THE RIM SHALL BE 3 TIMES THE DIAMETER OF THE ROOTBALL.
3. TREES: ALL TREES SHALL BE GROWN AS TREE FORMS AND TRAINED IN THE NURSERY TO A SINGLE STRAIGHT TRUNK.
4. PLANT LOCATIONS: TREES AND SHRUBS MAY BE ADJUSTED AT THE TIME OF THEIR PLANTING FOR OPTIMUM LOCATION AS DIRECTED BY THE RESIDENT ENGINEER.
5. TURF (LAWN) AREA MULCH: MULCH WITH STRAW NOT HAY AT 2 TONS/ACRE.
6. BARK MULCH: USE NATURAL DOUBLE-SHREDDED, UNDYED BARK MULCH AROUND TREES 3 INCHES AND ON SHRUB BEDS 4 INCHES.
7. GIANT REED ON ENTIRE 37,217 SF MITIGATION SITE TO BE TREATED WITH HERBICIDE BY A SUBCONTRACTED LICENSED APPLICATOR DURING THE LAST WEEK OF AUGUST (YEAR 1). STANDING REEDS TO BE MOWED DOWN USING HAND TOOLS PRIOR TO PLANTING IN THE FOLLOWING SPRING (YEAR 2). COST OF MOWING TO BE INCIDENTAL TO PLANTINGS. FOLLOW-UP TREATMENT WITH HERBICIDE BY A SUBCONTRACTED LICENSED APPLICATOR TO OCCUR DURING LATE AUGUST OF YEAR 2. GREAT CARE SHALL BE EXERCISED DURING THE FOLLOW-UP TREATMENT SO AS NOT TO DAMAGE PLANTINGS.
8. MITIGATION SITE PLANTINGS, INCLUDING TREES, SHRUBS, TUBELINGS AND WET MEADOW AND DETENTION BASIN SEED MIX TO BE ACCOMPLISHED DURING THE LAST WEEK OF MAY THROUGH THE FIRST WEEK OF JUNE OF YEAR 2.

GENERAL NOTES FOR SEEDED AREAS

1. SEED MIXTURE: SHALL NOT HAVE A WEED CONTENT EXCEEDING 0.40% BY WEIGHT AND SHALL BE FREE OF ALL NOXIOUS SEED.
2. SEED: LAWN AREAS: USE VAOT "URBAN CONSERVATION MIX" FOR NEW LAWN AREAS AND ALL ESTABLISHED LAWN AREAS DISTURBED BY THE CONTRACTOR, AT THE RATE OF 5 LBS/1000 SF OR 200 LBS/ACRE.
3. SEED: BIORETENTION AREAS/POND SITE: USE 2009 NEW ENGLAND EROSION CONTROL/RESTORATION MIX FOR DETENTION BASINS AND MOIST SITES FOR THE BIORETENTION AREAS AND BELOW AQUATIC BENCH LEVEL AT POND SITE, AT THE RATE OF 35LB/ACRE.
4. SEED WETLAND MITIGATION SITE WITH WET MEADOW AND DETENTION BASIN SEED MIX AT THE RATE OF 35 LBS/ACRE.
5. FERTILIZER: SHALL BE APPLIED AT THE RATE OF 4 LBS/1000 SF OR 175 LBS/ACRE (HYDROSEEDERS MAY USE 20-20-20 FORMULA) IN ALL SEEDED AREAS EXCEPT FOR MITIGATION SITE.
6. LIME: IN THE ABSENSE OF SOILS TESTS, APPLY PELLETIZED AGRICULTURAL LIMESTONE AT THE RATE OF 70 LBS/1000 SF OR 1.5 TONS/ACRE IN ALL AREAS EXCEPT FOR MITIGATION SITE.
7. TOPSOIL: TO BE USED WITH SEED AS INDICATED ON THE PLANS, OR AS DIRECTED BY THE RESIDENT ENGINEER. MINIMUM DEPTH OF 2 INCHES
8. SOILS IMPACTED BY CONSTRUCTION ACTIVITY SHALL BE LOOSENED TO A DEPTH OF APPROXIMATELY 4 INCHES BEFORE PLANTING.
9. MULCH SEEDED AREAS WITH STRAW NOT HAY AT A RATE OF 2 TONS/ACRE OR ACHIEVE 90% GROUND COVERAGE AS DIRECTED BY THE ENGINEER.
10. FOR TEMPORARY SEEDING INFORMATION REFER TO THE STATE'S LOW RISK HANDBOOK.
11. SEED: BIORETENTION POND BETWEEN ELEVATIONS 253 AND 254 AND ALL TEMPORARY WETLAND IMPACT AREAS TO BE SEEDED WITH NEW ENGLAND WETMIX AT A RATE OF 18 LB/AC AND PER SUPPLIER'S RECOMMENDATIONS.
12. WETLAND MITIGATION SITE TO BE SEEDED WITH WET MEADOW AND DETENTION BASIN MIX (VT WETLAND PLANT SUPPLY) AT A RATE OF 35LBS/ACRE AND PER SUPPLIERS RECOMMENDATIONS.

US Army Corps of Engineers
New York District

MARK	DESCRIPTION	DATE	APPR.

MARK	DESCRIPTION	DATE	APPR.

U. S. ARMY ENGINEER DISTRICT
NEW YORK
http://www.nan.usace.army.mil

DESIGNED BY: HLV
DATE: MAY 2015
DWN BY: ZDC
CKD BY: MTM
SOLICITATION NO.:
SUBMITTED BY: D & K
CONTRACT NO.:
FILE NAME: ...\dgn\120808C_L-406.dgn
SIZE: ANSI D
FORMAT: 1 Plot Per Sheet
PLOTTED BY: DUBOIS & KING
PLOT DATE: 5/11/2015

DuBois & King inc.

STONEHEDGE
STORMWATER IMPROVEMENTS
SOUTH BURLINGTON, VERMONT

LANDSCAPE DETAILS

SHEET REFERENCE NUMBER
L-406
SHEET 22 OF 25

MAY 2010 NYD A/E BORDER

Submitted by: DUBOIS & KING
...\dgn\120808C_L-406.dgn
Plot Date: 5/11/2015 10:49:48 AM

MAY 2010 NYD A/E BORDER

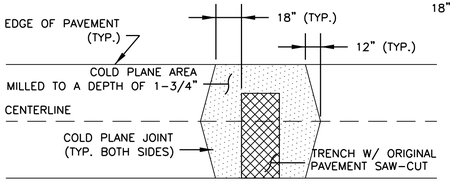

TRANSVERSE PATCH MORE THAN HALF THE WIDTH OF TRAVEL LANE

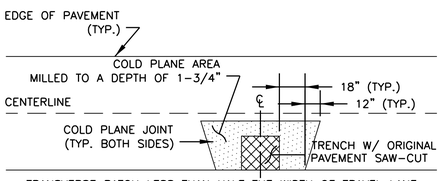

TRANSVERSE PATCH LESS THAN HALF THE WIDTH OF TRAVEL LANE

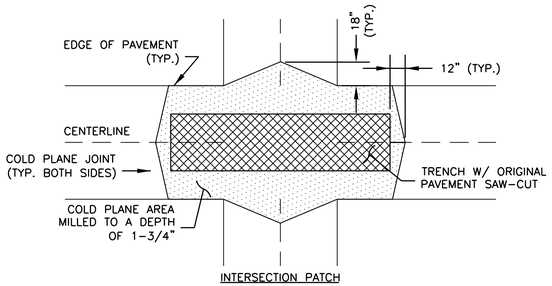

INTERSECTION PATCH

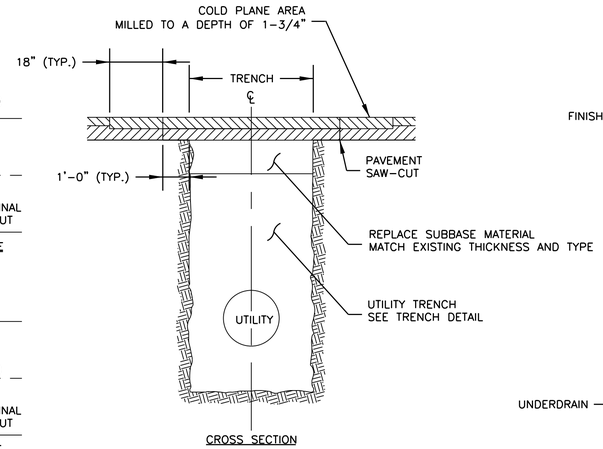

CROSS SECTION

NOTES:

1. PRIOR TO ALL TRENCH EXCAVATIONS EXISTING PAVEMENT SHALL BE SAW-CUT. ANY UNDERMINED AREAS THAT INADVERTENTLY DEVELOP DURING CONSTRUCTION ACTIVITIES SHALL BE REPAIRED.
2. A TEMPORARY 3-INCH DEPTH OF VTRANS 406.25 HOT BITUMINOUS MATERIAL SHALL BE PLACED IN TWO (2) 1-1/2" LIFTS. TEMPORARY PATCH SHALL CURE FOR 30-DAYS.
3. AFTER PAVEMENT CURE PERIOD HAS BEEN COMPLETED, PAVEMENT AREA SHALL BE MILLED TO A DEPTH OF 1-3/4" IN ACCORDANCE TO THE PLAN LAYOUTS PROVIDING A MINIMUM 18" OVERLAP ONTO EXISTING UNDISTURBED PAVEMENT.
4. TACK ALL PAVEMENT EDGES PRIOR TO PLACEMENT OF PERMANENT BITUMINOUS MATERIAL.
5. PLACE 1-3/4" OF VTRANS 406.25 HOT BITUMINOUS MATERIAL.

PAVEMENT REPAIR DETAIL

NOT TO SCALE

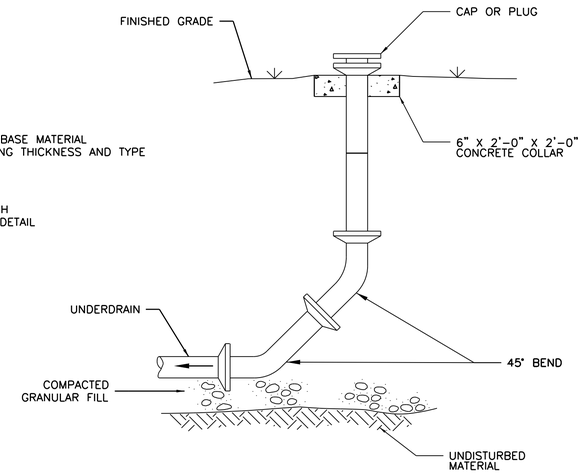

CLEANOUT TO GRADE DETAIL

NOT TO SCALE

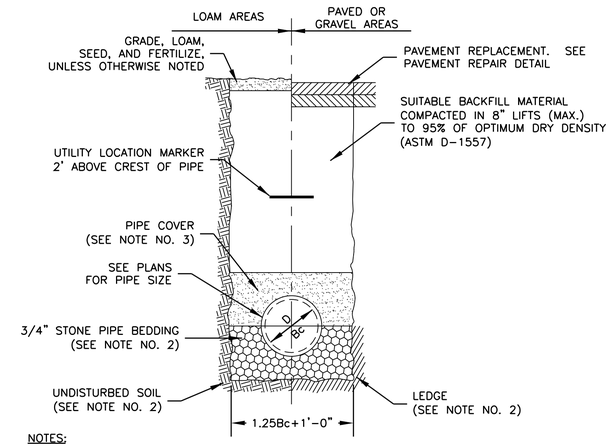

NOTES:

1. ALL EXCAVATION MUST MEET OSHA STANDARDS.
2. BEDDING MATERIAL SHALL BE FULL WIDTH OF TRENCH. BEDDING MATERIAL SHALL BE 6" BELOW PIPE (IN EARTH) OR 12" BELOW PIPE (IN LEDGE) UP TO SPRING LINE OF PIPE.
3. PIPE COVER MATERIAL SHALL BE FULL WIDTH OF TRENCH FROM SPRING LINE UP TO 12" (MINIMUM) ABOVE CREST OF PIPE. [PIPE COVER MATERIAL SHALL BE SCREENED SAND].

CULVERT AND STORM DRAIN PIPE TRENCH DETAIL

NOT TO SCALE

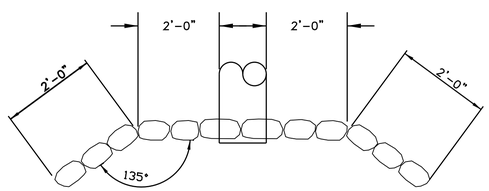

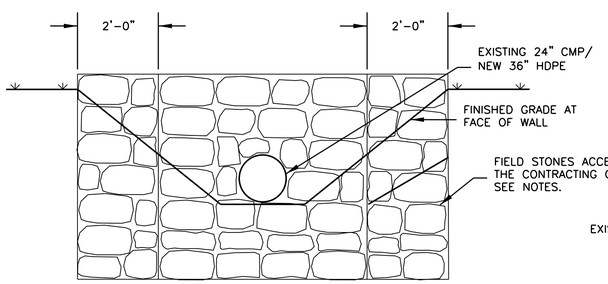

ELEVATION

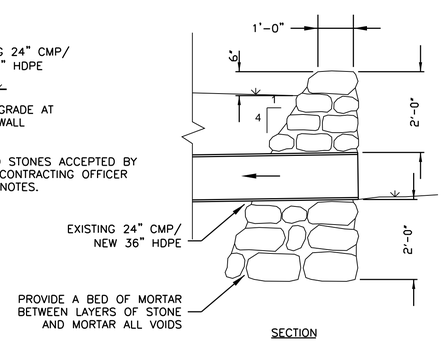

SECTION

NOTES:

1. STONE HEADWALL SHALL BE CONSTRUCTED IN COMPLIANCE WITH VTRANS SPECIFICATION SECTION 602 – MASONRY.
2. STONES USED IN HEADWALL SHALL COMPLY WITH VTRANS SPECIFICATION SECTION 706.01 – STONE FOR MASONRY.

TYPICAL MORTARED STONE HEADWALL DETAIL

NOT TO SCALE

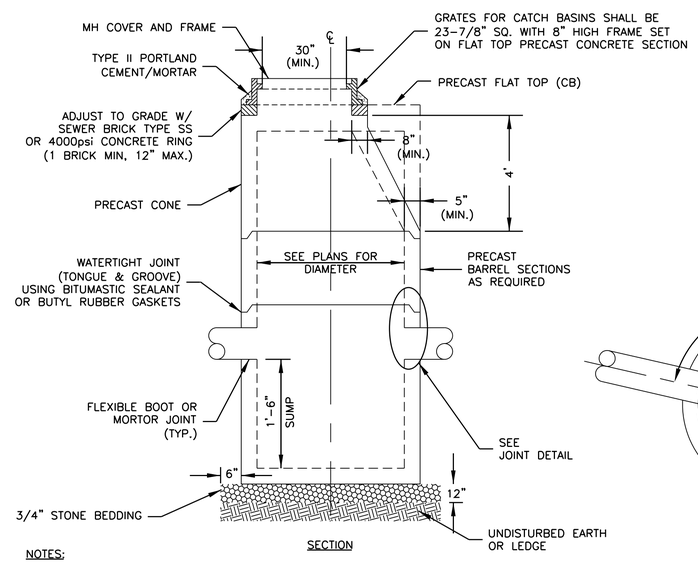

SECTION

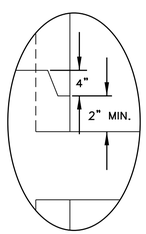

JOINT DETAIL

NOT TO SCALE

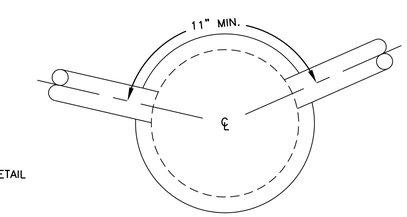

SECTION A–A

NOTES:

1. PRECAST SECTIONS SHALL BE 5" THICK WITH 0.12 SQ.IN/LF AREA OF STEEL REINFORCEMENT OR 8" THICK UNREINFORCED.
2. PRECAST SECTIONS SHALL MEET HS-20 LOADING, CONSIST OF CONCRETE THAT IS A MINIMUM OF 4000psi @28 DAYS AND SHALL BE MANUFACTURED IN ACCORDANCE WITH ASTM C-478; LATEST REVISION.
3. SEE PLANS FOR STRUCTURE SIZES.

CATCH BASIN/DRAIN MANHOLE DETAIL

NOT TO SCALE

US Army Corps of Engineers New York District

MARK	DESCRIPTION	DATE	APPR.	MARK	DESCRIPTION	DATE	APPR.

DESIGNED BY: HLV | DATE: MAY 2015
DWN BY: ZDC | CKD BY: MTM | SOLICITATION NO.:
SUBMITTED BY: D & K | CONTRACT NO.:
FILE NAME: ...\dgn\120808C_C-501.dgn
SIZE: ANSI D | PLOTTED BY: DUBOIS & KING | PLOT DATE: 5/20/2015

U. S. ARMY ENGINEER DISTRICT NEW YORK
http://www.nan.usace.army.mil

DuBois & King inc.

STONEHEDGE STORMWATER IMPROVEMENTS SOUTH BURLINGTON, VERMONT

STORM DRAIN DETAILS

SHEET REFERENCE NUMBER C-501
SHEET 23 OF 25

Submitted by: DUBOIS & KING Plot Date: 5/20/2015 10:17:09 AM
...\dgn\120808C_C-501.dgn

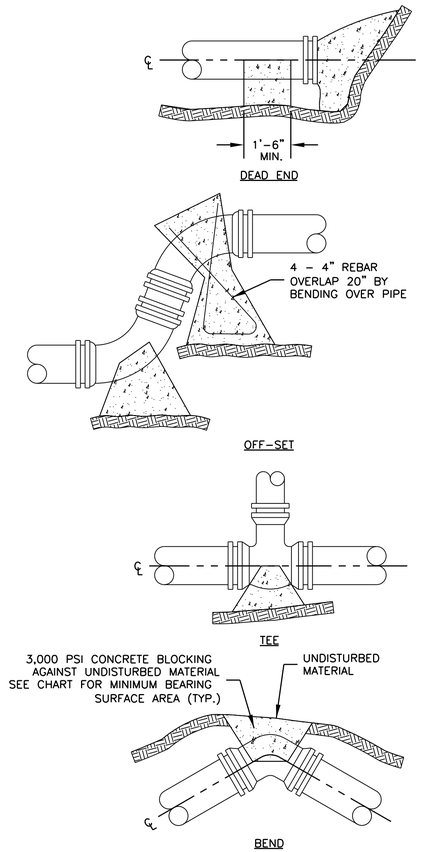

CAST-IN-PLACE CONCRETE THRUST BLOCK BEARING SURFACE AREA TABLE (S.F.)			
PIPE SIZE (IN)	SOFT WET CLAY, SAND OR SILT	DRY SAND	COMPACT COARSE SAND OR GRAVEL HARDPAN
DEAD END OR TEE			
2	2	2	2
4	4	2	2
6	9	5	3
8	16	8	5
10	24	12	8
12	34	17	12
¼ BEND			
2	2	2	2
4	2	2	2
6	4	2	2
8	7	4	3
10	10	5	4
12	15	7	5
⅛ BEND			
2	2	2	2
4	2	2	2
6	2	2	2
8	3	2	2
10	5	3	2
12	7	4	3
1/16 BEND			
2	2	2	2
4	2	2	2
6	2	2	2
8	2	2	2
10	3	2	2
12	4	2	2

WATER MAIN THRUST BLOCK DETAIL

NOT TO SCALE

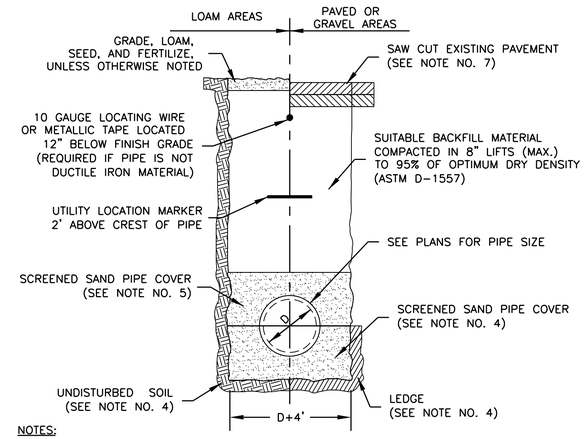

NOTES:

1. ALL MATERIALS SHALL MEET APPLICABLE AWWA SPECIFICATIONS
2. ALL EXCAVATION MUST MEET OSHA STANDARDS
3. PIPE DIAMETERS EQUAL TO OR LESS THAN 2-INCHES SHALL BE TYPE "K" COPPER TUBING. PIPE DIAMETERS GREATER THAN 2-INCHES SHALL BE EITHER DUCTILE IRON PIPE CLASS 52.
4. BEDDING MATERIAL SHALL BE FULL WIDTH OF TRENCH. BEDDING MATERIAL SHALL BE 6" BELOW PIPE (IN EARTH) OR 12" BELOW PIPE (IN LEDGE) UP TO SPRING LINE OF PIPE.
5. SAND COVER/CUSHION MATERIAL SHALL BE FULL WIDTH OF TRENCH. SAND MATERIAL SHALL BE FROM SPRING LINE UP TO 12" (MINIMUM) ABOVE CREST OF PIPE.
6. ALL WATER MAINS AND SERVICES SHALL MAINTAIN A MINIMUM COVER OF 5'-6". IN THE EVENT THAT MINIMUM COVER IS NOT FEASIBLE, PIPE SHALL BE INSULATED WITH A MINIMUM OF 2" RIGID WRAP-AROUND INSULATION WITH PVC JACKET
7. PAVEMENT REPAIR SHALL CONFORM TO THE PAVEMENT REPAIR DETAIL.

WATER MAIN/SERVICE PIPE TRENCH DETAIL

NOT TO SCALE

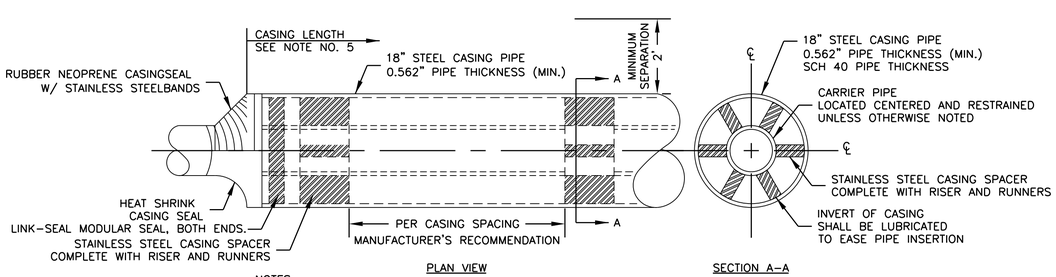

NOTES:

1. ALL EXCAVATION MUST MEET OSHA STANDARDS.
2. PIPE LEAKAGE TESTING SHALL COMPLY WITH LOCAL OR STATE REGULATIONS, WHICHEVER IS MORE STRICT.
3. PIPE JACKING OR HORIZONTAL DIRECTIONAL-DRILLING (HDD) PIT DIMENSIONS ARE AS REQUIRED BY CONTRACTOR.
4. RUBBER NEOPRENE CASING SEAL WITH STAINLESS STEEL BANDS OR HEAT SHRINK CASING SEAL ARE ACCEPTABLE. INSTALLATION SHALL FOLLOW MANUFACTURER'S RECOMMENDATION TO PROVIDE A WATER-TIGHT SEAL.
5. CASING PIPE LENGTH SHALL BE CALCULATED AS FOLLOWS: OUTSIDE PIPE DIAMETER (OD)+ [2 x (1.5 x MIN. SEPARATION)] + 12" OR AS IDENTIFIED ON PLANS, WHICHEVER IS GREATER

UTILITY CASING DETAIL

NOT TO SCALE

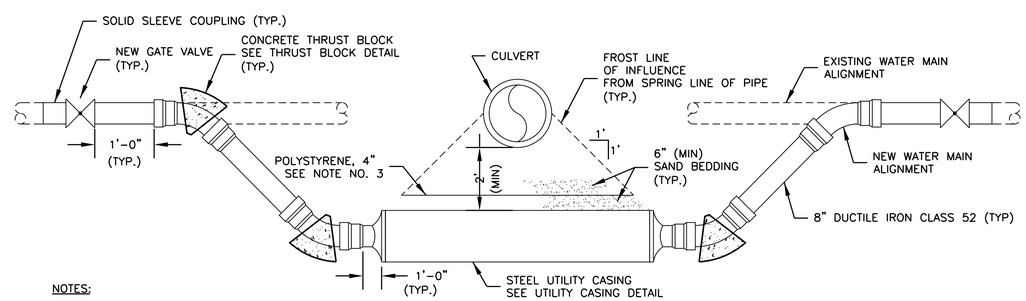

NOTES:

1. ALL EXCAVATION MUST MEET OSHA STANDARDS.
2. WATER PIPE LEAKAGE TESTING SHALL COMPLY WITH LOCAL OR STATE REGULATIONS, WHICHEVER IS MORE STRICT.
3. POLYSTYRENE RIGID INSULATION SHALL BE INSTALLED WHEN CASING/CULVERT SEPARATION IS LESS THAN 4'. INSULATION SHALL BE LOCATED 6-INCHES ABOVE CASING PIPE AND EXTEND TO THE LIMITS OF FROST LINE OF INFLUENCE + 12" EITHER SIDE OF O.D. OF CASING.
4. ALL WORK TO BE DONE IN ACCORDANCE WITH CITY OF LACONIA WATER DEPARTMENT SPECIFICATIONS.
5. ALL JOINTS TO BE MECHANICALLY RESTRAINED INCLUDING THRUST RESTRAINT RODS FROM EACH VALVE TO THE ADJACENT 45 DEGEE ELBOW.
6. THE CARRIER PIPE SHALL CONSIST OF A SINGLE PIPE LENGTH WITHIN THE CASING. NO JOINTS WILL BE ALLOWED WITHIN THE CASING.
7. THE CONTRACTOR MUST COORDINATE WITH THE LACONIA WATER DEPARTMENT AS INDICATED IN THE SPECIFICATIONS FOR ACTIVITIES INCLUDING BUT NOT LIMITED TO THE SETUP OF TEMPORARY SERVICE LINES, INSPECTION, PRESSURE TESTING, AND CHLORINATION. THESE SERVICES WILL BE PERFORMED AND PAID FOR BY THE CITY.

CULVERT CROSSING/WATER MAIN RELOCATION DETAIL

NOT TO SCALE

US Army Corps of Engineers
New York District

MARK	DESCRIPTION	DATE	APPR.	MARK	DESCRIPTION	DATE	APPR.

DESIGNED BY: HLV | DATE: MAY 2015
DWN BY: ZDC | CKD BY: MTM | SOLICITATION NO.:
SUBMITTED BY: D & K | CONTRACT NO.:
FILE NAME: ...\dgn\120808C_C-502.dgn
SIZE: ANSI D | FILE NAME: PLOBOIS & KING | PLOT DATE: 5/11/2015

U. S. ARMY ENGINEER DISTRICT
NEW YORK
http://www.nan.usace.army.mil

DuBois & King INC.

STONEHEDGE
STORMWATER IMPROVEMENTS
SOUTH BURLINGTON, VERMONT

SITE AND WATER RELOCATION DETAILS

SHEET REFERENCE NUMBER
C-502
SHEET 24 OF 25

MAY 2010 NYD A/E BORDER
Plot Date: 5/11/2015 10:52:08 AM
Submitted by: DUBOIS & KING
...\dgn\120808C_C-502.dgn

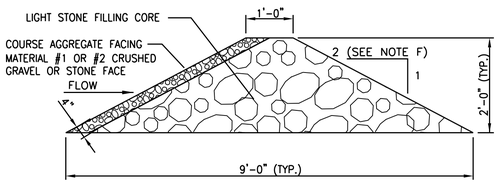

CROSS SECTION

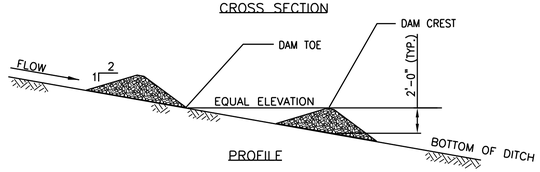

PROFILE

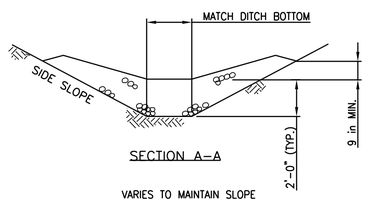

SECTION A–A

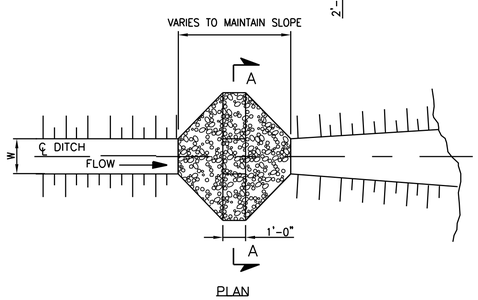

PLAN

CHECK DAM – TEMPORARY (STONE)

NOT TO SCALE

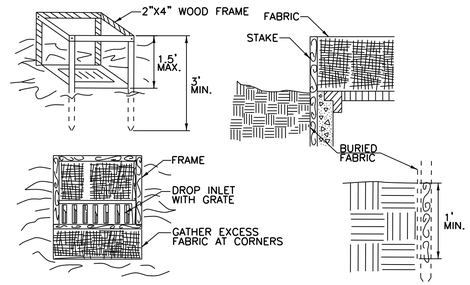

CONSTRUCTION SPECIFICATIONS

1. FILTER FABRIC SHALL HAVE AN APPARENT OPENING SIZE OF 40–85. BURLAP MAY BE USED FOR SHORT TERM APPLICATIONS.
2. CUT FABRIC FROM A CONTINUOUS ROLL TO ELIMINATE JOINTS. IF JOINTS ARE NEEDED THEY WILL BE OVERLAPPED TO THE NEXT STAKE.
3. STAKE MATERIALS WILL BE STANDARD 2"x 4" WOOD OR EQUIVALENT METAL WITH A MINIMUM LENGTH OF 3'.
4. SPACE STAKES EVENLY AROUND INLET 3' APART AND DRIVE A MINIMUM 18" DEEP. SPANS GREATER THAN 3' MAY BE BRIDGED WITH THE USE OF WIRE MESH BEHIND THE FILTER FABRIC FOR SUPPORT.
5. FABRIC SHALL BE EMBEDDED 1' MINIMUM BELOW GROUND AND BACKFILLED. IT SHALL BE SECURELY FASTENED TO THE STAKES AND FRAME.
6. A 2" x 4" WOOD FRAME SHALL BE COMPLETED AROUND THE CREST OF THE FABRIC FOR OVER FLOW STABILITY.
7. MAXIMUM DRAINAGE AREA 1 ACRE

CATCH BASIN INLET PROTECTION DETAIL

NOT TO SCALE

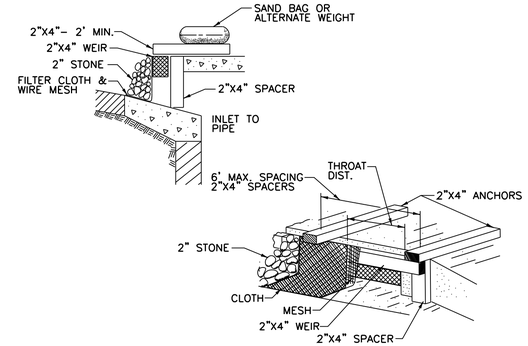

CONSTRUCTION SPECIFICATIONS

1. FILTER FABRIC SHALL HAVE AN APPARENT OPENING SIZE OF 40–85.
2. WOODEN FRAME SHALL BE CONSTRUCTED OF 2" x 4" CONSTRUCTION GRADE LUMBER.
3. WIRE MESH ACROSS THROAT SHALL BE A CONTINUOUS PIECE 30" MINIMUM WIDTH WITH A LENGTH 4' LONGER THAN THE THROAT. IT SHALL BE SHAPED AND SECURELY NAILED TO A 2" x 4" WEIR.
4. THE WEIR SHALL BE SECURELY NAILED TO 2"x 4" SPACERS 9" LONG SPACED NO MORE THAN 6' APART.
5. THE ASSEMBLY SHALL BE PLACED AGAINST THE INLET AND SECURED BY 2"x 4" ANCHORS 2' LONG EXTENDING ACROSS THE TOP OF THE INLET AND HELD IN PLACE BY SANDBAGS OR ALTERNATE WEIGHTS.
6. MAXIMUM DRAINAGE AREA 1 ACRE

CURB DROP INLET PROTECTION DETAIL

NOT TO SCALE

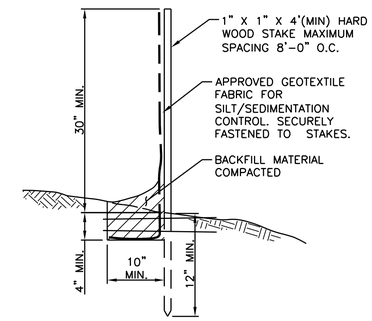

SILT FENCE DETAIL

NOT TO SCALE

US Army Corps of Engineers
New York District

MARK	DESCRIPTION	DATE	APPR.	MARK	DESCRIPTION	DATE	APPR.

U.S. ARMY ENGINEER DISTRICT
NEW YORK
http://www.nan.usace.army.mil

DuBois & King inc.

DESIGNED BY: HLV | DATE: MAY 2015
DWN BY: ZDC | CKD BY: MTM | SOLICITATION NO.:
SUBMITTED BY: D & K | CONTRACT NO.:
FILE NAME: ...\dgn\120808C_C-503.dgn
SIZE: ANSI D | FILE CONTENTS: DUBOIS & KING | PLOT DATE: 5/11/2015

STONEHEDGE
STORMWATER IMPROVEMENTS
SOUTH BURLINGTON, VERMONT

EROSION CONTROL DETAILS

SHEET REFERENCE NUMBER
C-503
SHEET 25 OF 29

MAY 2010 NYD A/E BORDER
Submitted by: DUBOIS & KING
...\dgn\120808C_C-503.dgn
Plot Date: 5/11/2015 10:52:58 AM

Stonehedge Mitigation Plans

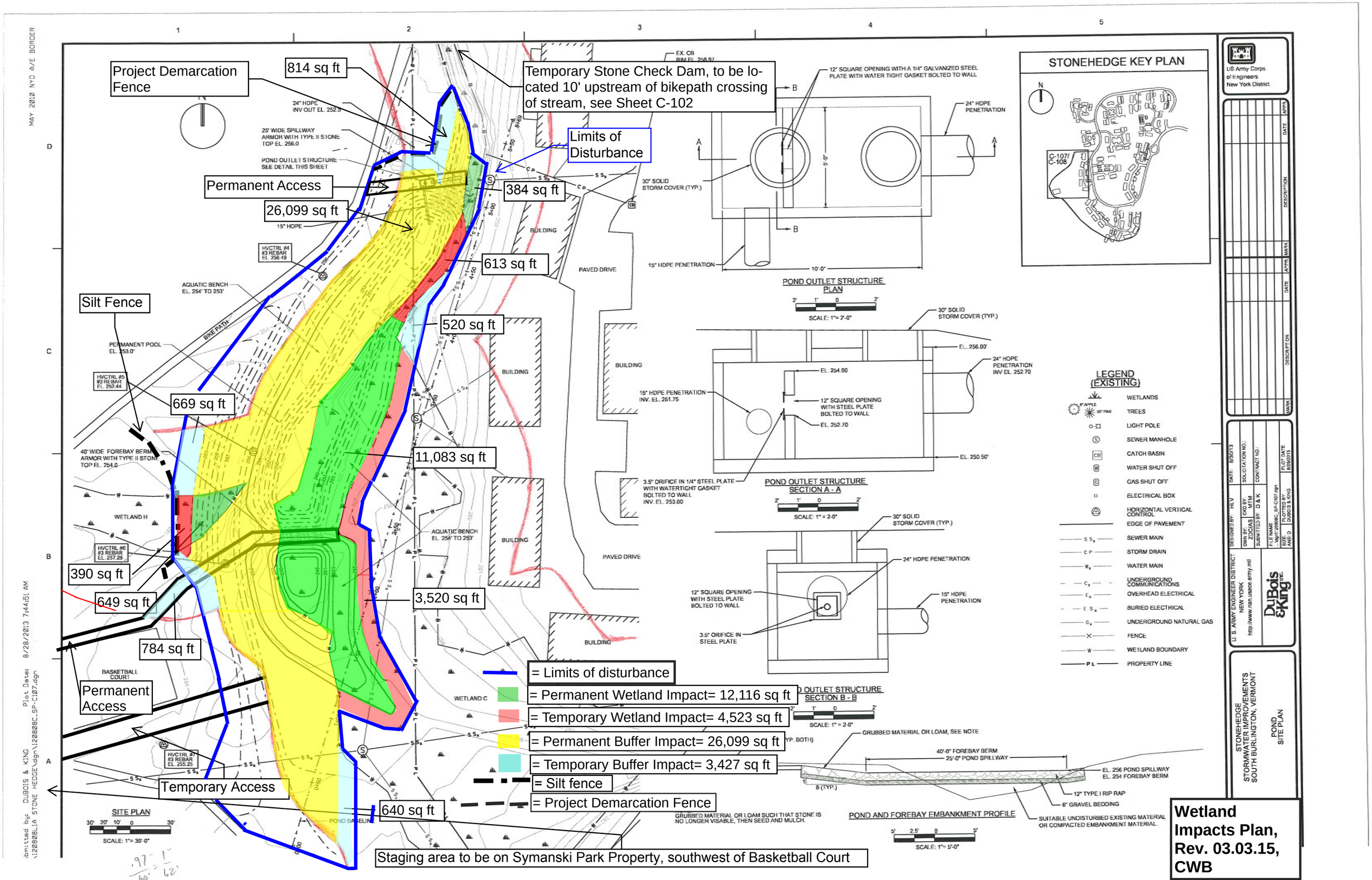

Wetland Impacts Plan, Rev. 03.03.15, CWB

MAY 2010 NYD A/E BORDER

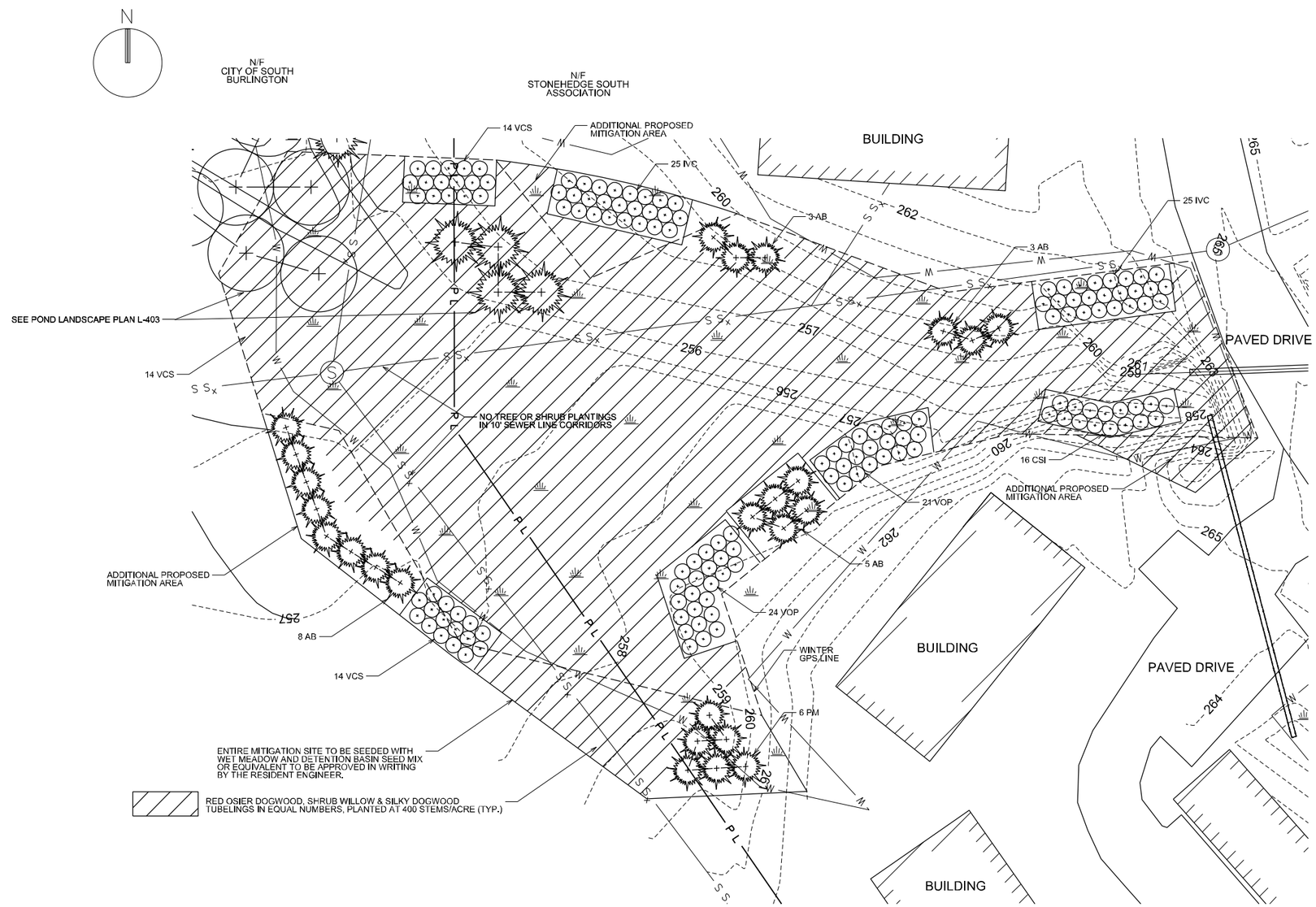

STONEHEDGE KEY PLAN

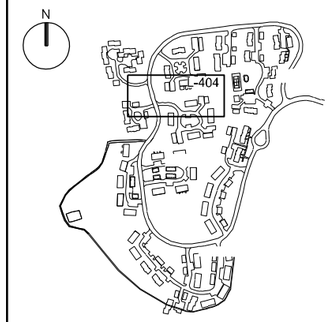

LEGEND (EXISTING)

- WETLANDS
- 6" APPLE / 20" PINE — TREES
- LIGHT POLE
- SEWER MANHOLE
- CATCH BASIN
- WATER SHUT OFF
- GAS SHUT OFF
- ELECTRICAL BOX
- HORIZONTAL VERTICAL CONTROL
- EDGE OF PAVEMENT
- $S\ S_x$ — SEWER MAIN
- C P — STORM DRAIN
- W_x — WATER MAIN
- C_x — UNDERGROUND COMMUNICATIONS
- E_x — OVERHEAD ELECTRICAL
- $E\ S_x$ — BURIED ELECTRICAL
- G_x — UNDERGROUND NATURAL GAS
- FENCE
- W — WETLAND BOUNDARY
- P L — PROPERTY LINE

LEGEND (NEW)

- LIMITS OF DISTURBANCE

NOTE:
SEE LANDSCAPING DETAIL SHEET FOR PLANT LIST AND DETAILS.

WETLAND MITIGATION SITE

20' 10' 0 20'

SCALE: 1"= 20'-0"

US Army Corps of Engineers
New York District

MARK	DESCRIPTION	DATE	APPR.	MARK	DESCRIPTION	DATE	APPR.

U. S. ARMY ENGINEER DISTRICT
NEW YORK
http://www.nan.usace.army.mil

DESIGNED BY: HLV
DWN BY: ZDC
CKD BY: MTM
SUBMITTED BY: D & K
FILE NAME: dgn\12080C_L-405.dgn
SIZE: ANSI D
PLOT SCALE: 1:1
PLOT DATE: 3/2/2015
DATE: MARCH 2015
SOLICITATION NO.:
CONTRACT NO.:

DuBois & King inc.

STONEHEDGE
STORMWATER IMPROVEMENTS
SOUTH BURLINGTON, VERMONT

WETLAND MITIGATION
LANDSCAPING PLAN

SHEET REFERENCE NUMBER
L-405
SHEET 20 OF 24

Submitted by: DUBOIS & KING
...\dgn\12080C_L-405.dgn
Plot Date: 3/2/2015 10:34:57 AM

PLANT LIST

QUANTITY	UNIT	KEY	BOTANICAL NAME	COMMON NAME	SIZE	ROOT	REMARKS
TREES - DECIDUOUS							
15	EA	AR	ACER RUBRUM	RED MAPLE	2" CAL.	B&B	
6	EA	BN	BETULA NIGRA	RIVER BIRCH	2" CAL.	B&B	
4	EA	BNC	BETULA NIGRA	RIVER BIRCH	12' HT.	B&B	3 STEM CLUMP
5	EA	CO	CELTIC OCCIDENTALIS	HACKBERRY	2" CAL.	B&B	
18	EA	QB	QUERCUS BICOLOR	WHITE OAK	2" CAL.	B&B	
9	EA	UA	ULMUS AMERICANA PRINCETON	PRINCETON ELM	2" CAL.	B&B	
TREES - CONIFEROUS							
32	EA	AB	ABIES BALSAMEA	BALSAM FIR	5' HT.	B&B	
26	EA	LL	LARIX LARICINA	AMERICAN LARCH	5' HT.	B&B	
20	EA	PG	PICEA GLAUCA	WHITE SPRUCE	5' HT.	B&B	
26	EA	PS	PINUS STROBUS	WHITE PINE	5' HT.	B&B	
6	EA	PM	PICEA MARIANA	BLACK SPRUCE	5' HT.	B&B	
SHRUBS							
30	EA	AMC	ARONIA MELANOCARPA	AUTUMN MAGIC BLACK CHOKEBERRY	24"	NO. 3 CONT.	
34	EA	CAN	CLETHERA ALNIFOLIA	SUMMERSWEET	24"	B&B	
11	EA	COD	CEPHALANTHUS OCCIDENTALIS	BUTTONBUSH	24"	NO. 3 CONT.	
34	EA	CRM	CORNUS RACEMOSA	GRAY DOGWOOD	3'	B&B	
48	EA	CSI	CORNUS SERICEA INSANTI	INSNTI DOGWOOD	3'	B&B	
5	EA	HVG	HAMAMELIS VIGINIANA	COMMON WITCHHAZEL	3'	B&B	
27	EA	IGC	ILEX GLABRA 'COMPACTA'	COMPACT INKBERRY	24"	B&B	
50	EA	IVC	ILEX VERTICILLATA	WINTER BERRY	3'	B&B	
5	EA	LBZ	LINDERA BENZOIN	SPICE BUSH	3'	B&B	
32	EA	VCS	VIBURNUM CASSINOIDES	WILD RAISIN	3'	B&B	
45	EA	VOP	VIBURNUM OPULUS	HIGHBUSH CRANBERRY	3'	B&B	
SEEDS							
30	LB	WMD	MIX OF SPECIES	WET MEADOW & DETENTION BASIN SEED MIX	-	-	
TUBELINGS							
260	EA	TBL	MIX OF SPECIES	TUBELING SHRUBS	1'	TUBES	

WET MEADOW & DETENTION BASIN SEED MIX		
BOTANICAL NAME	COMMON NAME	PERCENTAGE
Elymus virginicus	Virginia wild rye	29.70%
Panicum virgatum	Switchgrass	24.96%
Festuca rubra	Red fescue	23.84%
Carex vulpinoidea	Fox sedge	9.78%
Verbena hastate	Blue vervain	2.93%
Onoclea sensibilis	Sensitive fern	0.99%
Scirpus atrovirens	Green bulrush	0.98%
Scirpus cyperinus	Wool grass	0.96%
Bidens frondosa	Devil's beggartick	0.93%
Eupatoriadelphus maculatus	Spotted joe-pye weed	0.90%
Eupatorium perfoliatum	Boneset	0.66%
Juncus effuses	Soft rush	0.47%
Symphyotrichum nova-angliae	New England aster	0.42%

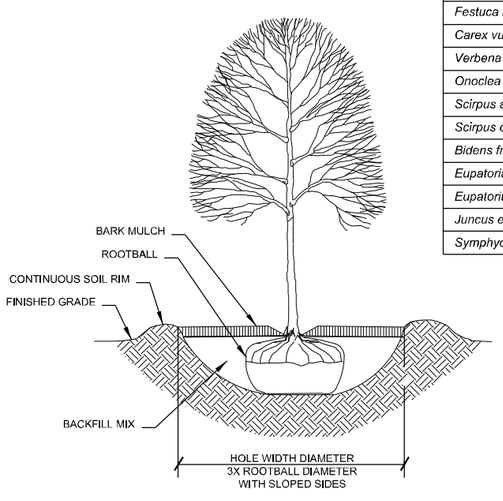

DECIDUOUS TREE PLANTING DETAIL
NOT TO SCALE

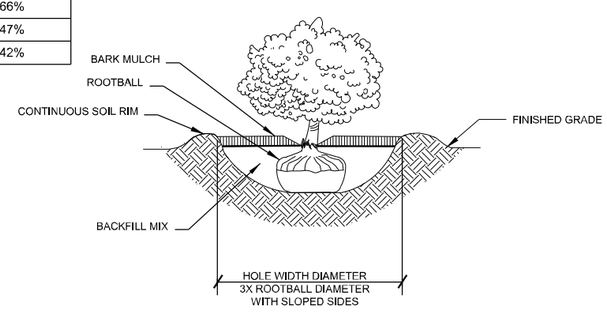

SHRUB PLANTING DETAIL
NOT TO SCALE

CONSTRUCTION NOTES

1. THE CONTRACTOR SHALL MINIMIZE DISTURBANCE TO ALL EXISTING TREES, SHRUBS, WETLAND, TURF AND OTHER VEGETATED AREAS WITHIN THE CONSTRUCTION LIMITS DURING THE PROJECT CONSTRUCTION PERIOD.
2. LIMITS OF ALL LANDSCAPE CONSTRUCTION ACTIVITIES SHALL NOT ENCROACH WITHIN 10' OF ANY EXISTING TREE LINE UNLESS OTHERWISE DIRECTED BY THE RESIDENT ENGINEER.
3. ALL DISTURBED AREAS SHALL BE SEEDED AND MULCHED AS SPECIFIED, WITHIN 7 DAYS OF FINAL GRADING UNLESS OTHERWISE DIRECTED BY THE RESIDENT ENGINEER.
4. ALL PLANTING LOCATIONS SHALL BE STAKED OUT PRIOR TO PLANTING. THE RESIDENT ENGINEER IN CONSULTATION WITH THE DESIGNER'S FIELD NATURALIST MAY ADJUST THE STAKES, AS NEEDED PRIOR TO INSTALLATION. THE CONTRACTOR SHALL BE RESPONSIBLE FOR MAINTAINING THE STAKES DURING CONSTRUCTION.
5. ALL LANDSCAPE CONSTRUCTION ACTIVITIES SHALL BE CONFINED TO WITHIN THE LIMITS OF DISTURBANCE AS IDENTIFIED ON THE PLANS OR AS OTHERWISE DIRECTED BY THE RESIDENT ENGINEER. THE CONTRACTOR SHALL NOT PLACE EQUIPMENT OR PERFORM WORK ON ADJACENT PROPERTIES WITHOUT WRITTEN PERMISSION FROM THE LANDOWNER AND RESIDENT ENGINEER.
6. THE CONTRACTOR SHALL VERIFY ALL PLANTING LOCATIONS AND QUANTITIES WITH THE RESIDENT ENGINEER PRIOR TO THE PLANTING. ADJUSTMENTS TO THE PLANTING DESIGN AND LAYOUT MAY BE REQUIRED BASED UPON ACTUAL FIELD CONDITIONS. QUANTITIES SHOWN ARE ESTIMATES ONLY AND ARE SUBJECT TO CHANGE.

GENERAL NOTES FOR PLANTING

1. SETTING PLANTS: PLACE ROOTBALL ON TOP OF STABLE SOIL SO THAT THE TRUNK FLARE/ROOTBALL IS 1 TO 2 INCHES HIGHER THAN FINISHED GRADE, AVOID PLANTING TOO DEEP, REMOVE TWINE AND BURLAP FROM TOP HALF OF ROOTBALL, IF SYNTHETIC, REMOVE WRAP OR CONTAINER, REMOVE THE TOP HALF OF WIRE BASKET.
2. CONTINUOUS SOIL RIM: FORM A 3 INCHES HIGH CONTINUOUS SOIL RIM AROUND TREES AND SHRUBS, THE DIAMETER OF THE RIM SHALL BE 3 TIMES THE DIAMETER OF THE ROOTBALL.
3. TREES: ALL TREES SHALL BE GROWN AS TREE FORMS AND TRAINED IN THE NURSERY TO A SINGLE STRAIGHT TRUNK.
4. PLANT LOCATIONS: TREES AND SHRUBS MAY BE ADJUSTED AT THE TIME OF THEIR PLANTING FOR OPTIMUM LOCATION AS DIRECTED BY THE RESIDENT ENGINEER.
5. TURF (LAWN) AREA MULCH: MULCH WITH STRAW NOT HAY AT 2 TONS/ACRE.
6. BARK MULCH: USE NATURAL DOUBLE-SHREDDED, UNDYED BARK MULCH AROUND TREES 3 INCHES AND ON SHRUB BEDS 4 INCHES.
7. GIANT REED ON ENTIRE 37,217 SF MITIGATION SITE TO BE TREATED WITH HERBICIDE BY A SUBCONTRACTED LICENSED APPLICATOR DURING THE LAST WEEK OF AUGUST (YEAR 1). STANDING REEDS TO BE MOWED DOWN USING HAND TOOLS PRIOR TO PLANTING IN THE FOLLOWING SPRING (YEAR 2). COST OF MOWING TO BE INCIDENTAL TO PLANTINGS. FOLLOW-UP TREATMENT WITH HERBICIDE BY A SUBCONTRACTED LICENSED APPLICATOR TO OCCUR DURING LATE AUGUST OF YEAR 2. GREAT CARE SHALL BE EXERCISED DURING THE FOLLOW-UP TREATMENT SO AS NOT TO DAMAGE PLANTINGS.
8. MITIGATION SITE PLANTINGS, INCLUDING TREES, SHRUBS, TUBELINGS AND WET MEADOW AND DETENTION BASIN SEED MIX TO BE ACCOMPLISHED DURING THE LAST WEEK OF MAY THROUGH THE FIRST WEEK OF JUNE OF YEAR 2.

GENERAL NOTES FOR SEEDED AREAS

1. SEED MIXTURE: SHALL NOT HAVE A WEED CONTENT EXCEEDING 0.40% BY WEIGHT AND SHALL BE FREE OF ALL NOXIOUS SEED.
2. SEED: LAWN AREAS: USE VAOT "URBAN CONSERVATION MIX" FOR NEW LAWN AREAS AND ALL ESTABLISHED LAWN AREAS DISTURBED BY THE CONTRACTOR, AT THE RATE OF 5 LBS/1000 SF OR 200 LBS/ACRE.
3. SEED: BIORETENTION AREAS/POND SITE: USE 2009 NEW ENGLAND EROSION CONTROL/RESTORATION MIX FOR DETENTION BASINS AND MOIST SITES FOR THE BIORETENTION AREAS AND BELOW AQUATIC BENCH LEVEL AT POND SITE, AT THE RATE OF 35LB/ACRE.
4. SEED WETLAND MITIGATION SITE WITH WET MEADOW AND DETENTION BASIN SEED MIX AT THE RATE OF 35 LBS/ACRE.
5. FERTILIZER: SHALL BE APPLIED AT THE RATE OF 4 LBS/1000 SF OR 175 LBS/ACRE (HYDROSEEDERS MAY USE 20-20-20 FORMULA) IN ALL SEEDED AREAS EXCEPT FOR MITIGATION SITE.
6. LIME: IN THE ABSENSE OF SOILS TESTS, APPLY PELLETIZED AGRICULTURAL LIMESTONE AT THE RATE OF 70 LBS/1000 SF OR 1.5 TONS/ACRE IN ALL AREAS EXCEPT FOR MITIGATION SITE.
7. TOPSOIL: TO BE USED WITH SEED AS INDICATED ON THE PLANS, OR AS DIRECTED BY THE RESIDENT ENGINEER. MINIMUM DEPTH OF 2 INCHES
8. SOILS IMPACTED BY CONSTRUCTION ACTIVITY SHALL BE LOOSENED TO A DEPTH OF APPROXIMATELY 4 INCHES BEFORE PLANTING.
9. MULCH SEEDED AREAS WITH STRAW NOT HAY AT A RATE OF 2 TONS/ACRE OR ACHIEVE 90% GROUND COVERAGE AS DIRECTED BY THE ENGINEER.
10. FOR TEMPORARY SEEDING INFORMATION REFER TO THE STATE'S LOW RISK HANDBOOK.
11. SEED: BIORETENTION POND BETWEEN ELEVATIONS 253 AND 254 AND ALL TEMPORARY WETLAND IMPACT AREAS TO BE SEEDED WITH NEW ENGLAND WETMIX AT A RATE OF 18 LB/AC AND PER SUPPLIER'S RECOMMENDATIONS.
12. WETLAND MITIGATION SITE TO BE SEEDED WITH WET MEADOW AND DETENTION BASIN MIX (VT WETLAND PLANT SUPPLY) AT A RATE OF 35LBS/ACRE AND PER SUPPLIERS RECOMMENDATIONS.

US Army Corps of Engineers
New York District

MARK	DESCRIPTION	DATE	APPR.

MARK	DESCRIPTION	DATE	APPR.

DESIGNED BY: HLV | DATE: MARCH 2015
DWN BY: ZDC | CKD BY: MTM | SOLICITATION NO.:
SUBMITTED BY: D & K | CONTRACT NO.:
FILE NAME: dgn\120808C_L-406.dgn
SIZE: ANSI D | FACILITY CODE: DUBOIS & KING | PLOT DATE: 3/11/2015

U. S. ARMY ENGINEER DISTRICT
NEW YORK
http://www.nan.usace.army.mil

DuBois & King INC.

STONEHEDGE
STORMWATER IMPROVEMENTS
SOUTH BURLINGTON, VERMONT

LANDSCAPE DETAILS

SHEET REFERENCE NUMBER
L-406
SHEET 21 OF 24

MAY 2010 NYD A/E BORDER
Submitted by: DUBOIS & KING
...\dgn\120808C_L-406.dgn
Plot Date: 3/11/2015 10:18:21 AM

LAUREL HILL
STORMWATER IMPROVEMENTS
SOUTH BURLINGTON, VERMONT
FINAL PLANS
MAY 2015

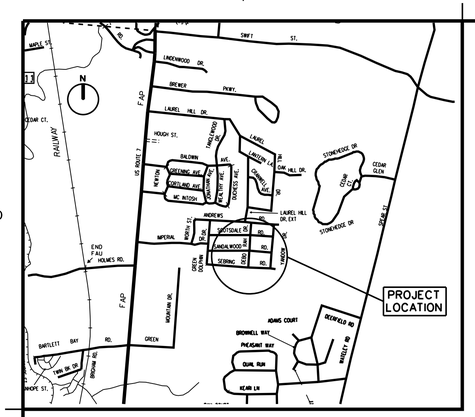

VICINITY MAP
NOT TO SCALE

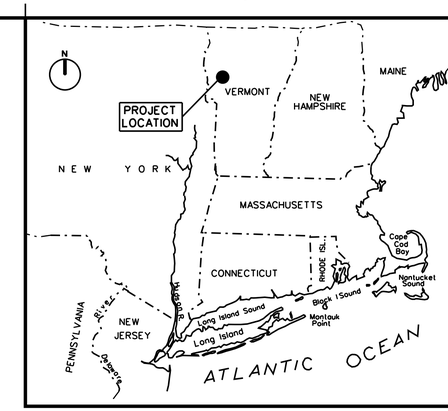

LOCATION PLAN
SCALE IN MILES
60 0 60 120

INDEX TO DRAWINGS

SHEET NO.	SHEET REF. NO.	TITLE
01	G-001	INDEX TO DRAWINGS
02	G-002	GENERAL NOTES
03	RR-001	LOCAL COOPERATION SHEET
04	C-101	EXISTING CONDITIONS AND DEMOLITION SITE PLAN
05	C-102	OVERALL SITE PLAN
06	C-103	STORM DRAIN MAINLINE - SITE PLAN AND PROFILE - STA. 10+00 TO STA. 17+00 (OUTLET TO SANDALWOOD RD)
07	C-104	STORM DRAIN MAINLINE - SITE PLAN AND PROFILE - STA. 16+90 TO STA. 24+50 (SANDALWOOD RD TO ANDREWS AVE)
08	C-105	STORM DRAIN MAINLINE - SITE PLAN AND PROFILE - STA. 24+50 TO STA. 28+42 (ANDREWS AVE)
09	C-106	SEBRING ROAD - SITE PLAN AND PROFILE - STA. 48+50 TO STA. 55+50
10	C-107	SANDALWOOD ROAD - SITE PLAN AND PROFILE - EXTENSION
11	C-108	SCOTTSDALE ROAD - SITE PLAN AND PROFILE - EXTENSION
12	C-501	STORM DRAIN DETAILS
13	C-502	WATER RELOCATION DETAILS
14	C-503	VAULT 1 - PLAN AND SECTIONS
15	C-504	VAULT 2 & VAULT 3 - PLAN AND SECTIONS

PROFESSIONAL SEAL

PREPARED BY:

PRINCIPAL, A/E FIRM DATE

US Army Corps of Engineers
New York District

MARK	DESCRIPTION	DATE	APPR.	MARK	DESCRIPTION	DATE	APPR.

U. S. ARMY ENGINEER DISTRICT
NEW YORK
http://www.nan.usace.army.mil

DESIGNED BY: CJK
DWN BY: AS
CKD BY: MTM
SUBMITTED BY: D & K
DATE: MAY 2015
SOLICITATION NO.:
CONTRACT NO.:
FILE NAME: ...\DGN\120808LH_G001.dgn
SIZE: ANSI D
PLOTTED BY: DUBOIS & KING
PLOT DATE: 5/20/2015

DuBois & King INC.

LAUREL HILL
STORMWATER IMPROVEMENTS
SOUTH BURLINGTION, VERMONT

INDEX TO DRAWINGS

SHEET REFERENCE NUMBER
G-001
SHEET 01 OF 15

MAY 2010 NYD A/E COVER

Submitted by: DUBOIS & KING
...\DGN\120808LH_G001.dgn
Plot Date: 5/20/2015 9:54:53 AM

MAY 2010 NYD A/E BORDER

GENERAL NOTES

1. THE PURPOSE OF THIS PROJECT IS TO REPLACE EXISTING STORM DRAIN PIPE, AND CONSTRUCT APPROXIMATELY 735 LF OF NEW STORM DRAIN.
2. THE PROJECT OWNER IS THE CITY OF SOUTH BURLINGTON. THE OWNER WILL APPOINT AN ENGINEER TO REPRESENT THE OWNER DURING CONSTRUCTION OF THE PROJECT.
3. TOPOGRAPHY AND THE LOCATION AND ELEVATIONS OF MANHOLES SHOWN ON THE PLANS ARE BASED ON FIELD SURVEY COMPLETED BY DUBOIS & KING AUG 12, 2009 (VERTICAL DATUM: NAVD 88).
4. ENGINEERING PERFORMED BY DuBOIS & KING, INC.. CONTACT PERSON IS MATTHEW MURAWASKI 802-728-3376 x 1454.
5. WRITTEN DIMENSIONS HAVE PRECEDENCE OVER SCALED DIMENSIONS. IN CASE OF CONFLICT BETWEEN THIS PLAN SET AND ANY OTHER DRAWING AND/OR SPECIFICATION, THE ENGINEER SHALL BE NOTIFIED IMMEDIATELY FOR CLARIFICATION.
6. THE CONTRACTOR SHALL BE FAMILIAR WITH THE EXISTING CONDITIONS OF THE SITE AND SURROUNDINGS PRIOR TO BIDDING AND PERFORMING THE WORK.
7. THE CONTRACTOR SHALL BID AND PERFORM THE WORK FROM A COMPLETE SET OF PLANS AND SPECIFICATIONS, AND SHALL NOTIFY THE ENGINEER OF ANY CONFLICTS WITHIN THE CONSTRUCTION DOCUMENTS.
8. THE CONTRACTOR IS RESPONSIBLE FOR THE MEANS AND METHODS OF CONSTRUCTION AND FOR CONDITIONS AT THE SITE. THESE PLANS, PREPARED BY DUBOIS & KING, DO NOT EXTEND TO OR INCLUDE SYSTEMS PERTAINING TO THE SAFETY OF THE CONSTRUCTION CONTRACTOR OR THEIR EMPLOYEES, AGENTS OR REPRESENTATIVES IN THE PERFORMANCE OF THE WORK. THE SEAL OF THE SURVEYOR OR ENGINEER HERE ON DOES NOT EXTEND TO ANY SUCH SAFETY SYSTEMS THAT MAY NOW OR HEREAFTER BE INCORPORATED INTO THESE PLANS. THE CONSTRUCTION CONTRACTOR SHALL PREPARE OR OBTAIN THE APPROPRIATE SAFETY SYSTEMS, WHICH MAY BE REQUIRED BY THE U.S. OCCUPATIONAL SAFETY AND HEALTH ADMINISTRATION (OSHA) AND/OR LOCAL REGULATIONS.
9. THE CONTRACTOR SHALL BID AND PERFORM THE WORK IN ACCORDANCE WITH ALL LOCAL, STATE, AND NATIONAL CODES, SPECIFICATIONS, REGULATIONS, STANDARDS, AND DETAILS.
10. SUBMIT SHOP DRAWINGS AND PRODUCT LITERATURE (MANUFACTURERS LITERATURE, CUT SHEETS, APPLICATION PROCEDURES, ETC.) FOR ALL PRODUCTS FOR USE IN THE PROJECT, FOR APPROVAL BY THE ENGINEER.
11. NO DEVIATION OR DEPARTURE FROM THE DESIGN INTENT PRESENTED IN THE CONTRACT DOCUMENTS (PLANS AND SPECIFICATIONS) WILL BE ALLOWED UNLESS AUTHORIZED BY THE ENGINEER.
12. NO BURNING OR ON-SITE DISPOSAL OF TREES, BRUSH, STUMPS OR OTHER CONSTRUCTION DERBIES IS PERMITTED. CONTRACTOR SHALL REMOVE SUCH MATERIAL AND DISPOSE OF THEM OFF-SITE IN A LEGAL MANNER.

CONSTRUCTION NOTES

1. LOCATE STAGING AREAS AWAY FROM SENSITIVE AREAS INCLUDING WETLANDS AND STREAM BUFFERS.
2. THE CONTRACTOR IS RESPONSIBLE FOR ALL TEMPORARY SHORING, WATER DIVERSION, AND DEWATERING REQUIREMENTS NEEDED FOR THE PROJECT.
3. ALL WORK SHALL TAKE PLACE IN THE DRY.
4. THE CONTRACTOR SHALL MEET THE REQUIREMENTS OUTLINED IN THE STATE OF VERMONT LOW RISK SITE LAND BOOK FOR EROSION PREVENTION AND SEDIMENT CONTROL.

MEETINGS AND SUBMITTALS

1. THE CONTRACTOR MUST PARTICIPATE IN AN ON-SITE PRE-CONSTRUCTION CONFERENCE.
2. THE CONTRACTOR MUST SUBMIT AN UPDATED ANTICIPATED WORK SCHEDULE TO THE ENGINEER EACH WEEK.
3. THE CONTRACTOR MUST SUBMIT A CONTROL OF WATER PLAN TO THE ENGINEER FOR APPROVAL PRIOR TO CONSTRUCTION.
4. THE CONTRACTOR MUST SUBMIT TO THE ENGINEER MATERIAL SLIPS FOR ALL MATERIALS AND ITEMS USED ON THE PROJECT PER THE SPECIFICATIONS.
5. THE CONTRACTOR MUST PROVIDE THE ENGINEER THE OPPORTUNITY TO INSPECT, WITH 48-HOUR PRIOR NOTICE.

PERMITS

1. THE FOLLOWING PERMIT IF REQUIRED, IS BEING SECURED BY THE OWNER FOR THIS PROJECT:

   - STORMWATER CONSTRUCTION GENERAL

2. THE CONTRACTOR IS RESPONSIBLE FOR FAMILIARIZING HIMSELF WITH THE REQUIREMENTS OF THESE PERMITS PRIOR TO BIDDING, AND FOR COMPLYING WITH THEM DURING CONSTRUCTION.
3. THE CONTRACTOR IS RESPONSIBLE FOR OBTAINING AND COMPLYING WITH AN VTDES PERMIT FROM THE US. ENVIRONMENTAL PROTECTION AGENCY.

UTILITIES

1. THE CONTRACTOR IS RESPONSIBLE FOR VERIFYING AND DETERMINING THE LOCATION, SIZE, AND ELEVATION OF ALL UTILITIES PRIOR TO THE START OF CONSTRUCTION. THE CONTRACTOR MAY CONTACT THE SOUTH BURLINGTON DEPARTMENT OF PUBLIC WORKS (802-658-7961) FOR QUESTIONS RELATED TO THE UTILITIES.
2. THE CONTRACTOR IS RESPONSIBLE FOR VERIFYING AND DETERMINING ALL UTILITIES (ABOVE AND BELOW GROUND) WITHIN THE PROJECT LIMITS, AND TO TAKE THE NECESSARY PRECAUTIONS TO PROTECT UTILITIES DURING CONSTRUCTION. CONTACT DIG-SAFE AT 1-800-DIG-SAFE (WWW.DIGSAFE.COM).
3. THE OWNER SHALL BE NOTIFIED IN WRITING OF ANY UTILITIES FOUND INTERFERING WITH THE PROPOSED CONSTRUCTION, AND APPROPRIATE REMEDIAL ACTION SHALL BE DETERMINED AND AGREED UPON BY THE ENGINEER BEFORE PROCEEDING WITH THE WORK.

STAGING AND STOCK PILE AREAS

1. THE FOLLOWING LOCATIONS ON CITY PROPERTY MAY BE AVAILABLE TO THE CONTRACTOR FOR STAGING OF SUPPLIES AND EQUIPMENT DURING CONSTRUCTION. THE CITY MAY BE BIDDING MULTIPLE PROJECTS AND AS SUCH THE CITY WILL CLARIFY WHICH SITE OR SITES WILL BE AVAILABLE FOR THIS PROJECT DURING THE BID PERIOD.
   A. EAST END OF SEBRING ROAD (EAST OF LAST DRIVEWAY).
   B. APPROXIMATELY 1/3 ACRE IN THE OPEN GRASSED AREA IN SZYMANSKI PARK SOUTHWEST OF THE BASKETBALL COURT. SAFE PEDESTRIAN ACCESS TO PARK FACILITIES INCLUDING PLAYGROUND, BASKETBALL COURT, TENNIS COURTS, AND RECREATIONAL PATHS MUST BE MAINTAINED.
   C. UP TO HALF OF THE SZYMANSKI PARK PARKING LOT AT THE EASTERN END OF ANDREWS AVENUE. PEDESTRIAN AND EMERGENCY VEHICLE ACCESS TO SZYMANSKI PARK FROM ANDREWS AVENUE MUST BE MAINTAINED.
2. THE CONTRACTOR SHALL PROVIDE FENCING OR SUITABLE DEMARCATION TO PREVENT INADVERTENT PEDESTRIAN ACCESS TO THE STAGING AREA.
3. THE CONTRACTOR WILL BE EXPECTED TO COORDINATE WITH THE CITY TO FINALIZE LOCATIONS OF STAGING AREAS ON CITY PROPERTY PRIOR TO THE START OF CONSTRUCTION.
4. THE CONTRACTOR MAY IDENTIFY AND SECURE THE USE OF ADDITIONAL STAGING AREAS ON NON-CITY PROPERTY.

RESTORATION OF SURFACES

1. THE CONTRACTOR SHALL APPLY A COURSE BED OF CRUSHED GRAVEL TO THE CONSTRUCTION ACCESS DRIVES AND NON PAVED STAGING AREAS AS DIRECTED BY THE ENGINEER TO PREVENT RUTTING, EROSION, AND TRACKING OF MATERIAL OFFSITE. AT THE COMPLETION OF WORK, THE CONTRACTOR MUST REMOVE THE GRAVEL AND REGRADE, SEED, FERTILIZE, AND MULCH THE DISTURBED AREA.
2. AT THE COMPLETION OF WORK, THE CONTRACTOR MUST RESTORE ACCESS, STAGING, AND WORK AREAS TO PRE-CONSTRUCTION CONDITION. RESTORATION MAY INCLUDE PLACEMENT OF PAVEMENT ON EXISTING DRIVES AND / OR APPLICATION OF TOPSOIL, GRASS SEED, FERTILIZER, AND MULCH TO AFFECTED LAWN AREAS.

EROSION PREVENTION AND SEDIMENT CONTROL NOTES

1. STANDARDS IN "LOW RISK SITE HANDBOOK FOR EROSION PREVENTION AND SEDIMENT CONTROL" BY VT ENVIRONMENTAL DEPARTMENT OF ENVIRONMENTAL CONSERVATION, SERVE AS THE REQUIRED EROSION PREVENTION AND SEDIMENT CONTROL PLAN FOR THE SITE. THE CONTRACTOR SHALL BE FAMILIAR WITH THE STANDARDS AND SPECIFICATIONS IN THIS PUBLICATION AND SHALL IMPLEMENT THE APPLICABLE MEASURES AS SPECIFIED.

PROTECTION OF TREES

1. THE CONTRACTOR SHALL COORDINATE WITH THE CITY ARBORIST PRIOR TO PRUNING BRANCHES OR ROOTS OF ANY TREES LOCATED OUTSIDE THE CITY'S PERMANENT EASEMENTS. THIS REQUIREMENT APPLIES TO ALL TREES ADJACENT TO THE EASEMENTS WHETHER OR NOT EXPLICITELY NOTED ELSEWHERE ON THESE PLANS.

US Army Corps of Engineers
New York District

MARK	DESCRIPTION	DATE	APPR.

MARK	DESCRIPTION	DATE	APPR.

U. S. ARMY ENGINEER DISTRICT
NEW YORK
http://www.nan.usace.army.mil

DESIGNED BY: CJK | DATE: MAY 2015
DWN BY: AS | CKD BY: MTM | SOLICITATION NO.:
SUBMITTED BY: D & K | CONTRACT NO.:
FILE NAME: ...\DGN\120808LH_G002.dgn
SIZE: ANSI D | PLOTTED BY: DUBOIS & KING | PLOT DATE: 5/11/2015

DuBois & King inc.

LAUREL HILL
STORM WATER IMPROVEMENTS
SOUTH BURLINGTON, VERMONT

GENERAL NOTES

SHEET REFERENCE NUMBER
G-002
SHEET 02 OF 15

Submitted by: DUBOIS & KING Plot Date: 5/11/2015 2:12:54 PM
...\DGN\120808LH_G002.dgn

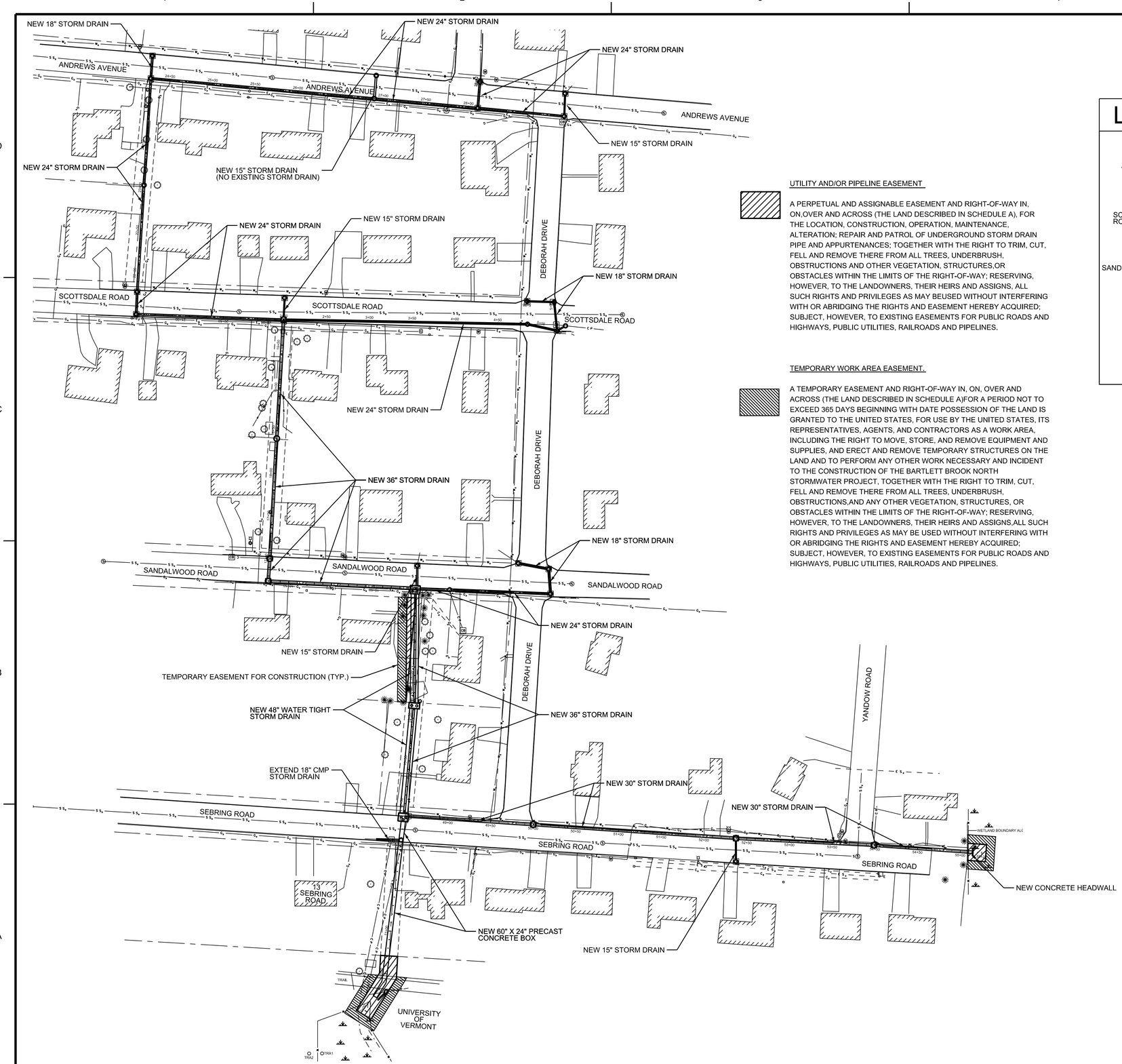

UTILITY AND/OR PIPELINE EASEMENT

A PERPETUAL AND ASSIGNABLE EASEMENT AND RIGHT-OF-WAY IN, ON,OVER AND ACROSS (THE LAND DESCRIBED IN SCHEDULE A), FOR THE LOCATION, CONSTRUCTION, OPERATION, MAINTENANCE, ALTERATION; REPAIR AND PATROL OF UNDERGROUND STORM DRAIN PIPE AND APPURTENANCES; TOGETHER WITH THE RIGHT TO TRIM, CUT, FELL AND REMOVE THERE FROM ALL TREES, UNDERBRUSH, OBSTRUCTIONS AND OTHER VEGETATION, STRUCTURES,OR OBSTACLES WITHIN THE LIMITS OF THE RIGHT-OF-WAY; RESERVING, HOWEVER, TO THE LANDOWNERS, THEIR HEIRS AND ASSIGNS, ALL SUCH RIGHTS AND PRIVILEGES AS MAY BEUSED WITHOUT INTERFERING WITH OR ABRIDGING THE RIGHTS AND EASEMENT HEREBY ACQUIRED; SUBJECT, HOWEVER, TO EXISTING EASEMENTS FOR PUBLIC ROADS AND HIGHWAYS, PUBLIC UTILITIES, RAILROADS AND PIPELINES.

TEMPORARY WORK AREA EASEMENT.

A TEMPORARY EASEMENT AND RIGHT-OF-WAY IN, ON, OVER AND ACROSS (THE LAND DESCRIBED IN SCHEDULE A)FOR A PERIOD NOT TO EXCEED 365 DAYS BEGINNING WITH DATE POSSESSION OF THE LAND IS GRANTED TO THE UNITED STATES, FOR USE BY THE UNITED STATES, ITS REPRESENTATIVES, AGENTS, AND CONTRACTORS AS A WORK AREA, INCLUDING THE RIGHT TO MOVE, STORE, AND REMOVE EQUIPMENT AND SUPPLIES, AND ERECT AND REMOVE TEMPORARY STRUCTURES ON THE LAND AND TO PERFORM ANY OTHER WORK NECESSARY AND INCIDENT TO THE CONSTRUCTION OF THE BARTLETT BROOK NORTH STORMWATER PROJECT, TOGETHER WITH THE RIGHT TO TRIM, CUT, FELL AND REMOVE THERE FROM ALL TREES, UNDERBRUSH, OBSTRUCTIONS,AND ANY OTHER VEGETATION, STRUCTURES, OR OBSTACLES WITHIN THE LIMITS OF THE RIGHT-OF-WAY; RESERVING, HOWEVER, TO THE LANDOWNERS, THEIR HEIRS AND ASSIGNS,ALL SUCH RIGHTS AND PRIVILEGES AS MAY BE USED WITHOUT INTERFERING WITH OR ABRIDGING THE RIGHTS AND EASEMENT HEREBY ACQUIRED; SUBJECT, HOWEVER, TO EXISTING EASEMENTS FOR PUBLIC ROADS AND HIGHWAYS, PUBLIC UTILITIES, RAILROADS AND PIPELINES.

LAUREL HILL KEY PLAN

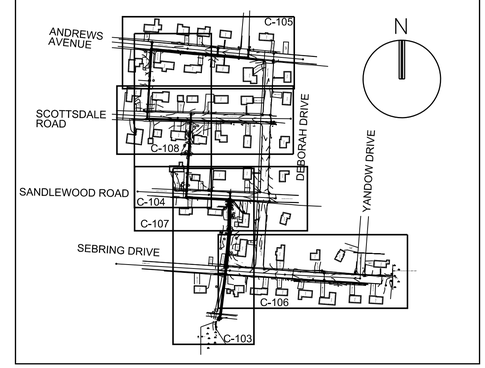

N

LEGEND
(EXISTING)

- WETLANDS
- 6" APPLE, 20" PINE — TREES
- LIGHT POLE
- SEWER MANHOLE
- CATCH BASIN
- WATER SHUT OFF
- GAS SHUT OFF
- ELECTRICAL BOX
- HORIZONTAL VERTICAL CONTROL
- BM EL. 221.46 — BENCHMARK
- EDGE OF PAVEMENT
- SEWER MAIN
- STORM DRAIN
- WATER MAIN
- UNDERGROUND COMMUNICATIONS
- OVERHEAD ELECTRICAL
- BURRIED ELECTRICAL
- UNDERGROUND NATURAL GAS
- FENCE
- WETLAND BOUNDARY
- PROPERTY BOUNDARY
- RIGHT OF WAY
- TEMPORARY EASEMENT
- UTILITY/PIPELINE EASEMENT

OVERALL REAL ESTATE SITE PLAN

60' 30' 0 60'

SCALE: 1"= 60'-0"

US Army Corps
of Engineers
New York District

MARK	DESCRIPTION	DATE	APPR.	MARK	DESCRIPTION	DATE	APPR.

DESIGNED BY: CJK | DATE: MAY 2015
DWN BY: AS | CKD BY: MTM | SOLICITATION NO.:
SUBMITTED BY: D & K | CONTRACT NO.:
FILE NAME: ...\120808LH_C-102realestate.dgn
SIZE: ANSI D | PLOTTED BY: DUBOIS & KING | PLOT DATE: 5/20/2015

U. S. ARMY ENGINEER DISTRICT
NEW YORK
http://www.nan.usace.army.mil

DuBois & King inc.

LAUREL HILL
STORM WATER IMPROVEMENTS
SOUTH BURLINGTON, VERMONT

LOCAL COOPERATION SHEET

SHEET
REFERENCE
NUMBER
RR-001

SHEET 03 OF 15

MAY 2010 NYD A/E BORDER

Submitted by: DUBOIS & KING
...\120808LH_C-102realestate.dgn
Plot Date: 5/20/2015 9:59:37 AM

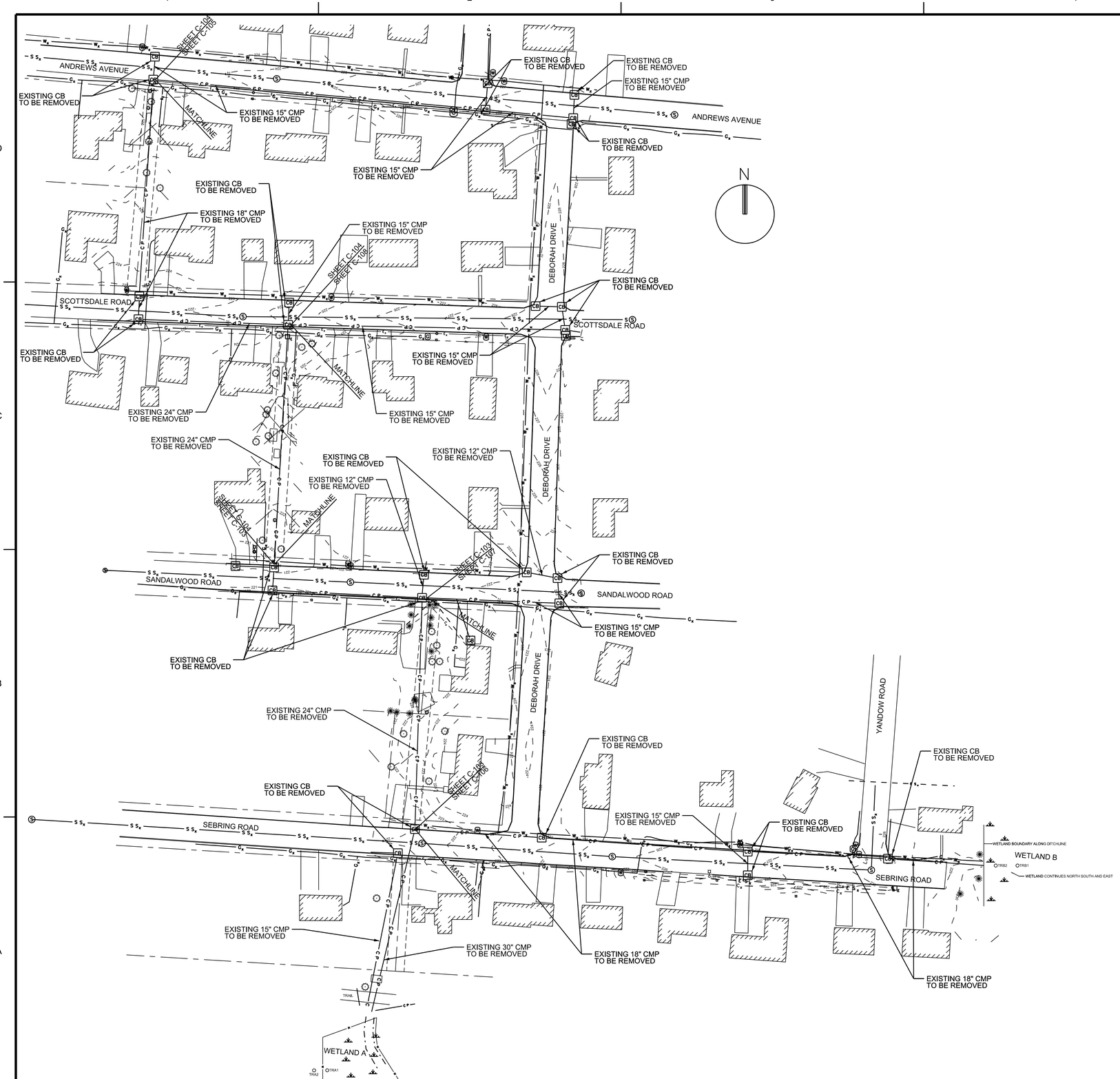

LEGEND (EXISTING)

- WETLANDS
- 6" APPLE / 20" PINE — TREES
- LIGHT POLE
- SEWER MANHOLE
- CATCH BASIN
- WATER SHUT OFF
- GAS SHUT OFF
- ELECTRICAL BOX
- HORIZONTAL VERTICAL CONTROL
- BM EL. 221.46 — BENCHMARK
- EDGE OF PAVEMENT
- SEWER MAIN
- STORM DRAIN
- WATER MAIN
- UNDERGROUND COMMUNICATIONS
- OVERHEAD ELECTRICAL
- BURRIED ELECTRICAL
- UNDERGROUND NATURAL GAS
- FENCE
- WETLAND BOUNDARY
- PROPERTY BOUNDARY
- RIGHT OF WAY

EXISTING CONDITIONS AND DEMOLITION SITE PLAN

60' 30' 0 60'

SCALE: 1"= 60'-0"

US Army Corps of Engineers New York District

MARK	DESCRIPTION	DATE	APPR.	MARK	DESCRIPTION	DATE	APPR.

U. S. ARMY ENGINEER DISTRICT NEW YORK
http://www.nan.usace.army.mil

DuBois & King inc.

DESIGNED BY: CJK | DATE: MAY 2015
DWN BY: AS | CKD BY: MTM | SOLICITATION NO.:
SUBMITTED BY: D & K | CONTRACT NO.:
FILE NAME: ...\DGN\120808LH_C-101.dgn
SIZE: ANSI D | PLOTTED BY: DUBOIS & KING | PLOT DATE: 5/11/2015

LAUREL HILL
STORM WATER IMPROVEMENTS
SOUTH BURLINGTON, VERMONT

EXISTING CONDITIONS & DEMOLITION PLAN

SHEET REFERENCE NUMBER
C-101
SHEET 04 OF 15

MAY 2010 NYD A/E BORDER

Submitted by: DUBOIS & KING Plot Date: 5/11/2015 2:13:39 PM
...\DGN\120808LH_C-101.dgn

MAY 2010 NYD A/E BORDER

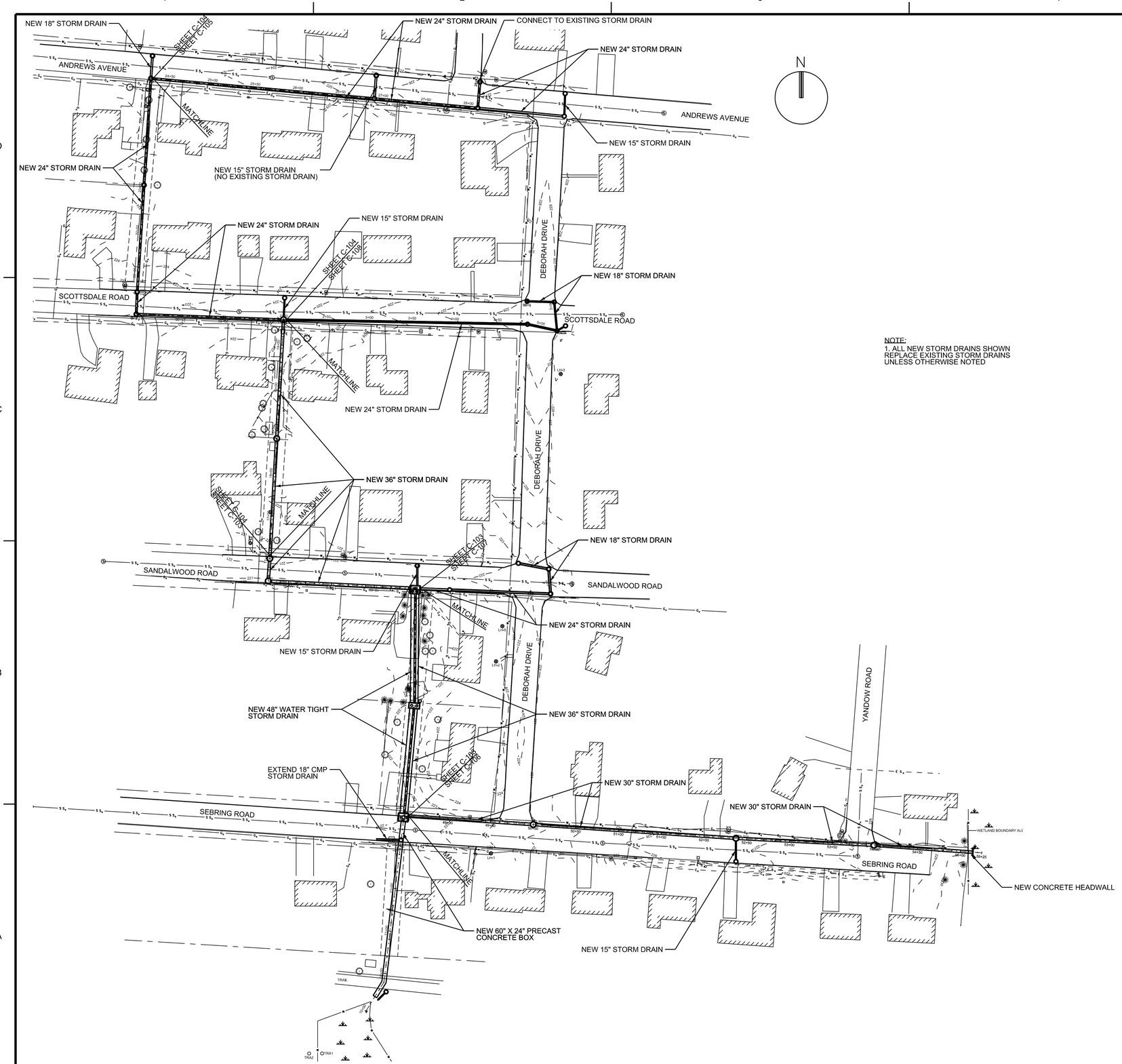

NOTE:
1. ALL NEW STORM DRAINS SHOWN REPLACE EXISTING STORM DRAINS UNLESS OTHERWISE NOTED

LEGEND
(EXISTING)

- WETLANDS
- 6" APPLE, 20" PINE — TREES
- LIGHT POLE
- SEWER MANHOLE
- CATCH BASIN
- WATER SHUT OFF
- GAS SHUT OFF
- ELECTRICAL BOX
- HORIZONTAL VERTICAL CONTROL
- BM EL: 221.46 — BENCHMARK
- EDGE OF PAVEMENT
- SEWER MAIN
- STORM DRAIN
- WATER MAIN
- UNDERGROUND COMMUNICATIONS
- OVERHEAD ELECTRICAL
- BURRIED ELECTRICAL
- UNDERGROUND NATURAL GAS
- FENCE
- WETLAND BOUNDARY
- PROPERTY BOUNDARY
- RIGHT OF WAY
- LH-1 — SOIL BORING

OVERALL SITE PLAN

60' 30' 0 60'

SCALE: 1"= 60'-0"

US Army Corps of Engineers
New York District

MARK	DESCRIPTION	DATE	APPR.	MARK	DESCRIPTION	DATE	APPR.

DESIGNED BY: CJK | DATE: MAY 2015
DWN BY: AS | CKD BY: MTM | SOLICITATION NO.:
SUBMITTED BY: D & K | CONTRACT NO.:
FILE NAME: ...\DGN\120808LH_C-102.dgn
SIZE: ANSI D | PLOTTED BY: DUBOIS & KING | PLOT DATE: 5/11/2015

U. S. ARMY ENGINEER DISTRICT
NEW YORK
http://www.nan.usace.army.mil

DuBois & King inc.

LAUREL HILL
STORM WATER IMPROVEMENTS
SOUTH BURLINGTON, VERMONT

OVERALL SITE PLAN

SHEET REFERENCE NUMBER
C-102
SHEET 05 OF 15

Submitted by: DUBOIS & KING
...\DGN\120808LH_C-102.dgn
Plot Date: 5/11/2015 2:14:28 PM

MAY 2010 NYD A/E BORDER

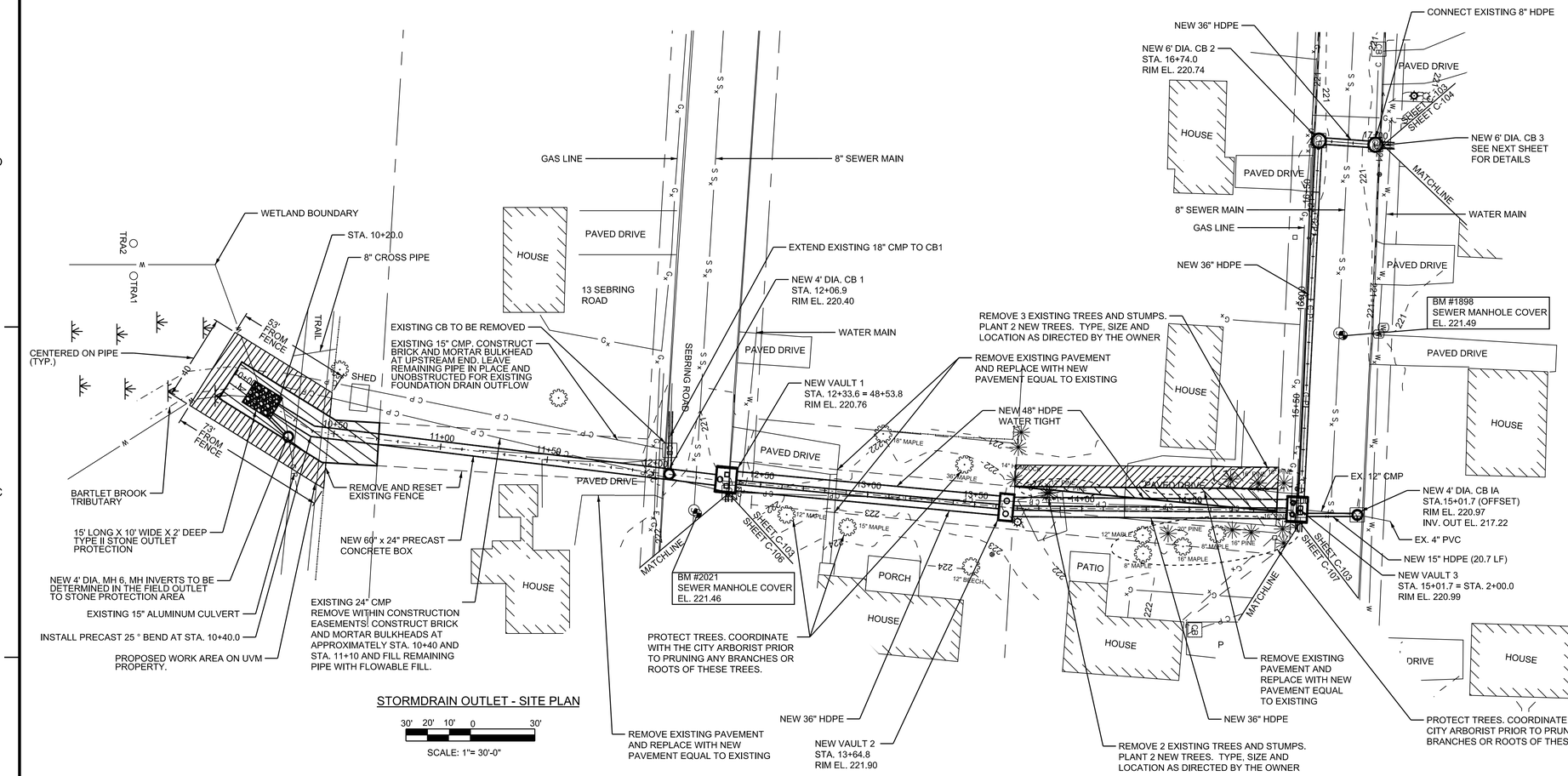

STORMDRAIN OUTLET - SITE PLAN

30' 20' 10' 0 30'

SCALE: 1"= 30'-0"

LEGEND (EXISTING)

- WETLANDS
- 6" APPLE, 20" PINE — TREES
- LIGHT POLE
- SEWER MANHOLE
- CB — CATCH BASIN
- W — WATER SHUT OFF
- GAS SHUT OFF
- ELECTRICAL BOX
- HORIZONTAL VERTICAL CONTROL
- BM EL. 221.46 — BENCHMARK
- EDGE OF PAVEMENT
- S S_x — SEWER MAIN
- C P — STORM DRAIN
- W_x — WATER MAIN
- C_x — UNDERGROUND COMMUNICATIONS
- E_x — OVERHEAD ELECTRICAL
- E S_x — BURRIED ELECTRICAL
- G_x — UNDERGROUND NATURAL GAS
- FENCE
- W — WETLAND BOUNDARY
- PROPERTY BOUNDARY
- RIGHT OF WAY

SITE PLAN

30' 20' 10' 0 30'

SCALE: 1"= 30'-0"

NOTE:

1. UNKNOWN NUMBER AND LOCATION OF BASEMENT DRAIN LINES EXIST. CONTRACTOR TO TIE BASEMENT DRAINS TO STORM DRAINAGE STRUCTURES, SEE STORM DRAIN MANHOLE DETAIL.

2. CONTRACTOR SHALL COORDINATE WITH THE CITY ARBORIST PRIOR TO PRUNING ANY BRANCHES OR ROOTS IN PROXIMITY OF THE WORK AREA.

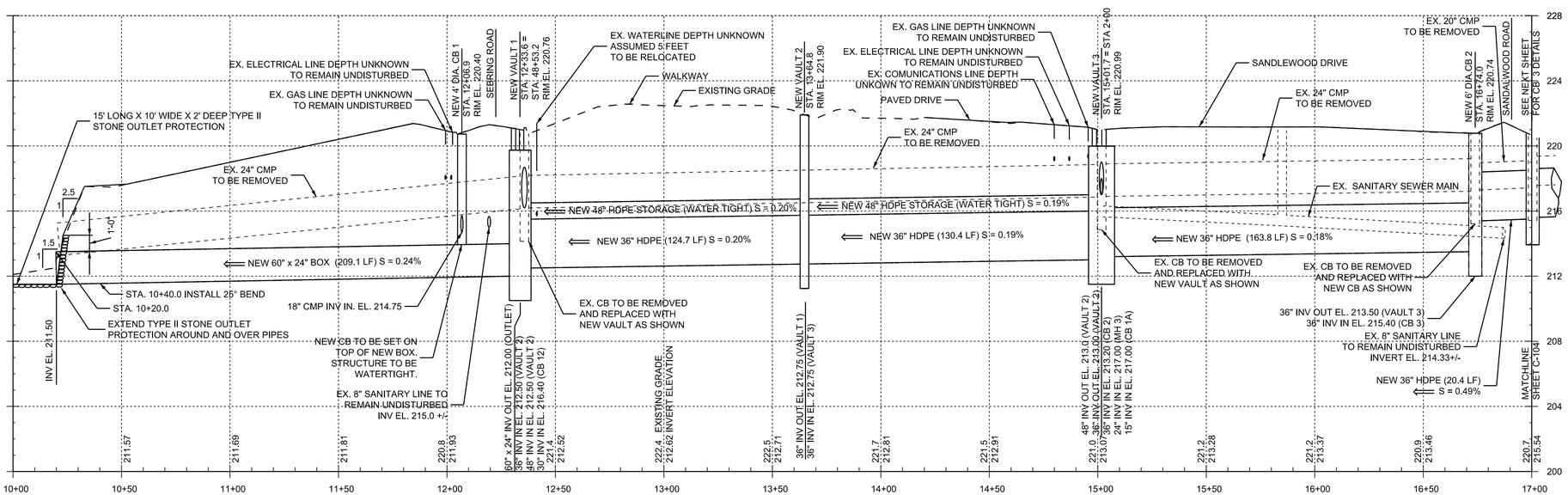

PROFILE

HORIZONTAL SCALE: 1"= 30'-0"
VERTICAL SCALE: 1"= 4'-0"

30' 20' 10' 0 30'

NOTE: PIPE LENTHS ARE PROVIDED FOR GENERAL INFORMATION. PIPE LENGTHS SHALL BE FIELD VERIFIED BASED ON ACTUAL STRUCTURE PLACEMENT

US Army Corps of Engineers
New York District

MARK	DESCRIPTION	DATE	APPR.	MARK	DESCRIPTION	DATE	APPR.

DESIGNED BY: CJK | DATE: MAY 2015
DWN BY: AS | CKD BY: MTM | SOLICITATION NO.:
SUBMITTED BY: D & K | CONTRACT NO.:
FILE NAME: ...\DGN\120808LH_C-103.dgn
SIZE: ANSI D | PLOTTED BY: DUBOIS & KING | PLOT DATE: 5/11/2015

U.S. ARMY ENGINEER DISTRICT NEW YORK
http://www.nan.usace.army.mil

DuBois & King inc.

LAUREL HILL
STORM WATER IMPROVEMENTS
SOUTH BURLINGTON, VERMONT

STORM DRAIN MAINLINE
SITE PLAN AND PROFILE
STA. 10+00 TO STA. 17+00

SHEET REFERENCE NUMBER
C-103
SHEET 08 OF 15

Submitted by: DUBOIS & KING
...\DGN\120808LH_C-103.dgn
Plot Date: 5/11/2015 2:16:10 PM

MAY 2010 NYD A/E BORDER

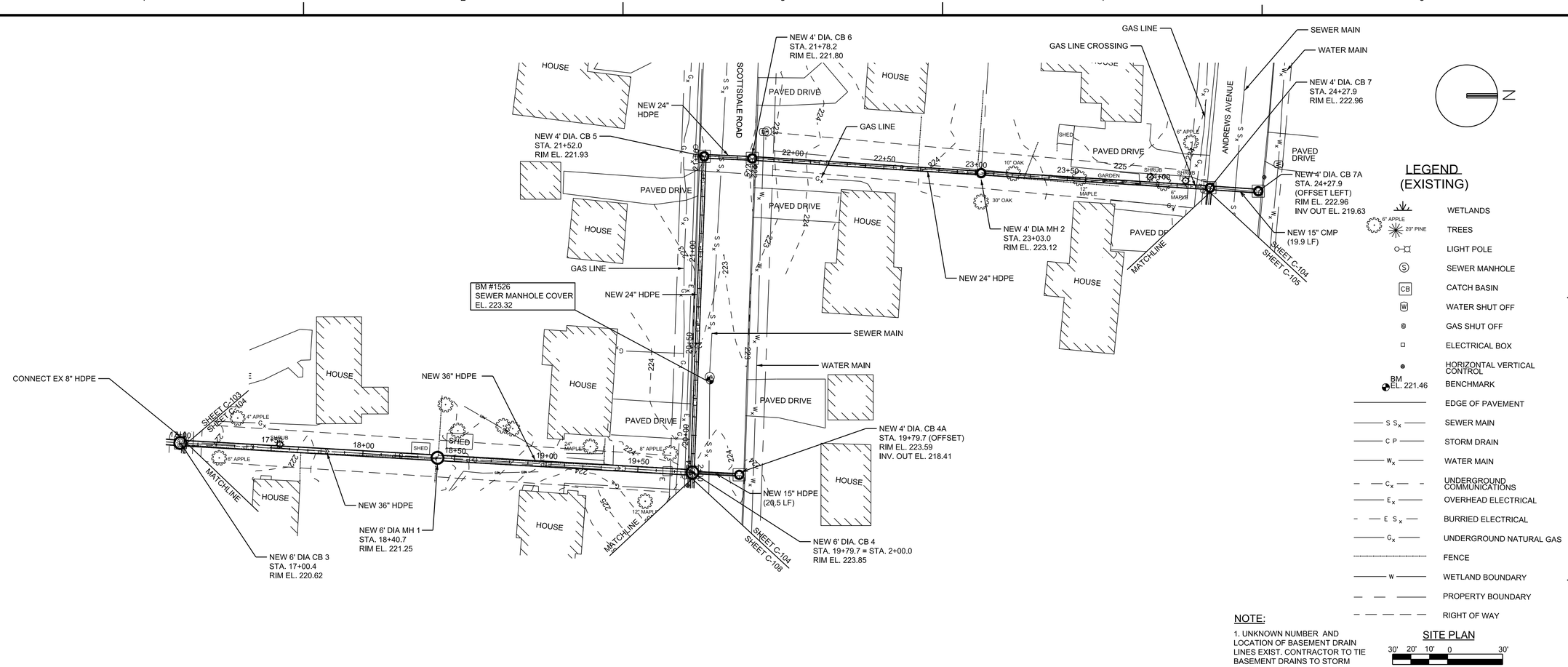

LEGEND (EXISTING)

- WETLANDS
- TREES
- LIGHT POLE
- SEWER MANHOLE
- CATCH BASIN
- WATER SHUT OFF
- GAS SHUT OFF
- ELECTRICAL BOX
- HORIZONTAL VERTICAL CONTROL
- BM EL. 221.46 — BENCHMARK
- EDGE OF PAVEMENT
- S S$_x$ — SEWER MAIN
- C P — STORM DRAIN
- W$_x$ — WATER MAIN
- C$_x$ — UNDERGROUND COMMUNICATIONS
- E$_x$ — OVERHEAD ELECTRICAL
- E S$_x$ — BURRIED ELECTRICAL
- G$_x$ — UNDERGROUND NATURAL GAS
- FENCE
- W — WETLAND BOUNDARY
- PROPERTY BOUNDARY
- RIGHT OF WAY

NOTE:

1. UNKNOWN NUMBER AND LOCATION OF BASEMENT DRAIN LINES EXIST. CONTRACTOR TO TIE BASEMENT DRAINS TO STORM DRAINAGE STRUCTURES, SEE STORM DRAIN MANHOLE DETAIL

SITE PLAN

30' 20' 10' 0 30'

SCALE: 1"= 30'-0"

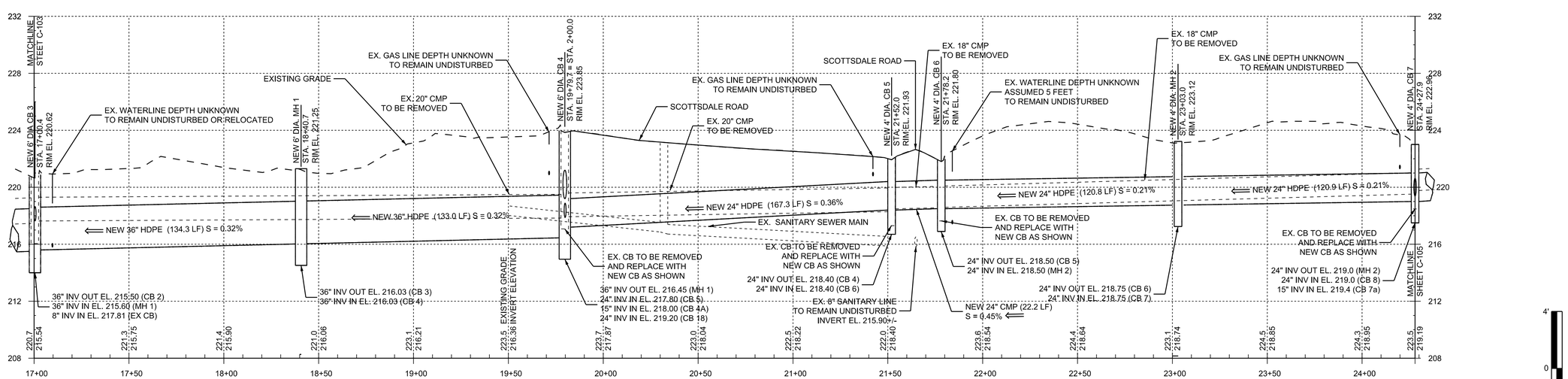

NOTE: PIPE LENTHS ARE PROVIDED FOR GENERAL INFORMATION. PIPE LENGTHS SHALL BE FIELD VERIFIED BASED ON ACTURAL STRUCTURE PLACEMENT

PROFILE

HORIZONTAL SCALE: 1"= 30'-0"

VERTICAL SCALE: 1"= 4'-0"

30' 20' 10' 0 30'

4' 0 1' 2' 3' 4'

US Army Corps of Engineers New York District

MARK	DESCRIPTION	DATE	APPR.	MARK	DESCRIPTION	DATE	APPR.

DESIGNED BY: CJK | DATE: MAY 2015 | SOLICITATION NO.:
DWN BY: AS | CKD BY: MTM | CONTRACT NO.:
SUBMITTED BY: D & K
FILE NAME: ...\DGN\120808LH_C-104.dgn
SIZE: ANSI D | PLOTTED BY: DUBOIS & KING | PLOT DATE: 5/11/2015

U. S. ARMY ENGINEER DISTRICT NEW YORK
http://www.nan.usace.army.mil

DuBois & King inc.

LAUREL HILL
STORM WATER IMPROVEMENTS
SOUTH BURLINGTON, VERMONT

STORMDRAIN MAINLINE
SITE PLAN AND PROFILE
STA. 16+90 TO STA. 24+50

SHEET REFERENCE NUMBER
C-104
SHEET 07 OF 15

Submitted by: DUBOIS & KING
...\DGN\120808LH_C-104.dgn
Plot Date: 5/11/2015 2:16:52 PM

MAY 2010 NYD A/E BORDER

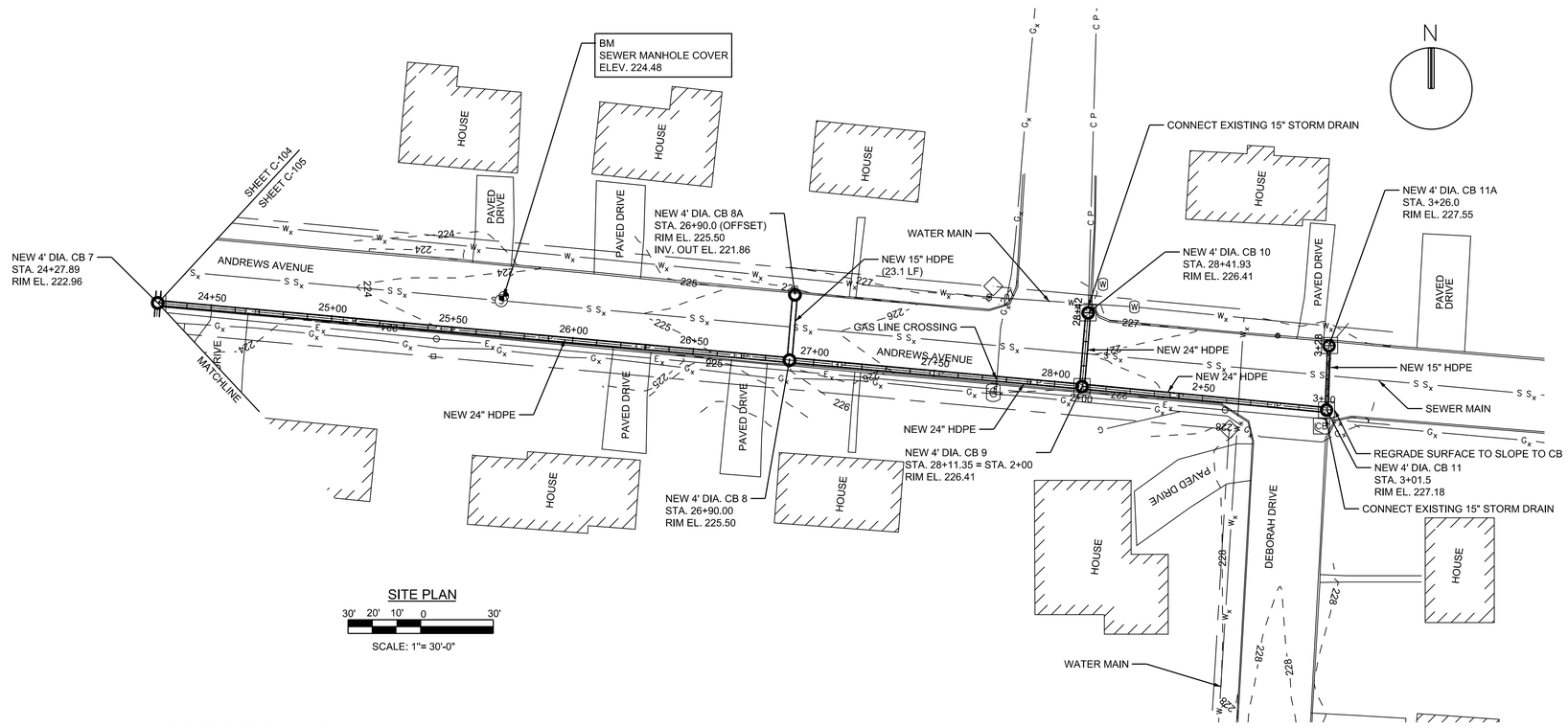

SITE PLAN

30' 20' 10' 0 30'

SCALE: 1"= 30'-0"

LEGEND (EXISTING)

- WETLANDS
- 6" APPLE, 20" PINE — TREES
- LIGHT POLE
- SEWER MANHOLE
- CATCH BASIN
- WATER SHUT OFF
- GAS SHUT OFF
- ELECTRICAL BOX
- HORIZONTAL VERTICAL CONTROL
- BM EL. 221.46 — BENCHMARK
- EDGE OF PAVEMENT
- SEWER MAIN
- STORM DRAIN
- WATER MAIN
- UNDERGROUND COMMUNICATIONS
- OVERHEAD ELECTRICAL
- BURRIED ELECTRICAL
- UNDERGROUND NATURAL GAS
- FENCE
- WETLAND BOUNDARY
- PROPERTY BOUNDARY
- RIGHT OF WAY

NOTE:

1. UNKNOWN NUMBER AND LOCATION OF BASEMENT DRAIN LINES EXIST. CONTRACTOR TO TIE BASEMENT DRAINS TO STORM DRAINAGE STRUCTURES, SEE STORM DRAIN MANHOLE DETAIL

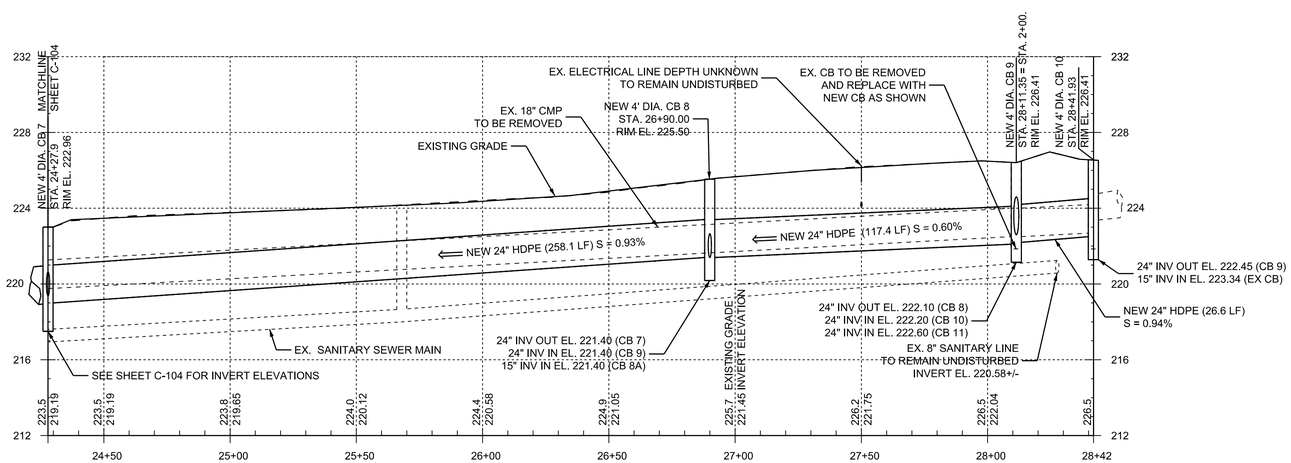

MAIN

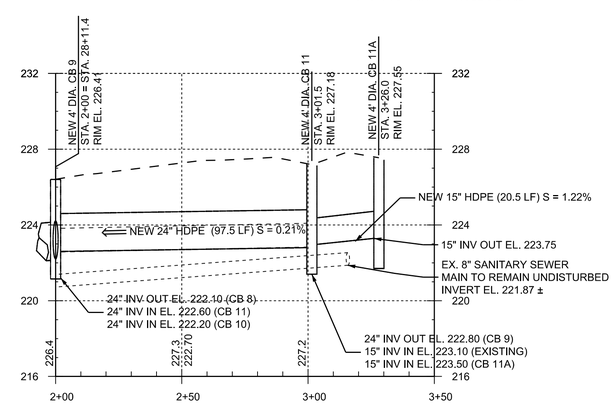

ANDREWS EXTENSION

PROFILE

HORIZONTAL SCALE: 1"= 30'-0"
VERTICAL SCALE: 1"= 4'-0"

30' 20' 10' 0 30'

4' 0 1' 2' 3' 4'

NOTE: PIPE LENTHS ARE PROVIDED FOR GENERAL INFORMATION. PIPE LENGTHS SHALL BE FIELD VERIFIED BASED ON ACTURAL STRUCTURE PLACEMENT

US Army Corps of Engineers
New York District

MARK	DESCRIPTION	DATE	APPR.	MARK	DESCRIPTION	DATE	APPR.

DESIGNED BY: CJK | DATE: MAY 2015
DWN BY: AS | CKD BY: MTM | SOLICITATION NO.:
SUBMITTED BY: D & K | CONTRACT NO.:
FILE NAME: ...\DGN\120808LH_C-105.dgn
SIZE: ANSI D | PLOTTED BY: DUBOIS & KING | PLOT DATE: 5/11/2015

U. S. ARMY ENGINEER DISTRICT
NEW YORK
http://www.nan.usace.army.mil

DuBois & King INC.

LAUREL HILL
STORM WATER IMPROVEMENTS
SOUTH BURLINGTON, VERMONT

STORM DRAIN MAINLINE
SITE PLAN AND PROFILE
STA. 24+50 TO STA. 28+42

SHEET REFERENCE NUMBER
C-105

SHEET 08 OF 15

Submitted by: DUBOIS & KING
...\DGN\120808LH_C-105.dgn
Plot Date: 5/11/2015 2:17:36 PM

MAY 2010 NYD A/E BORDER

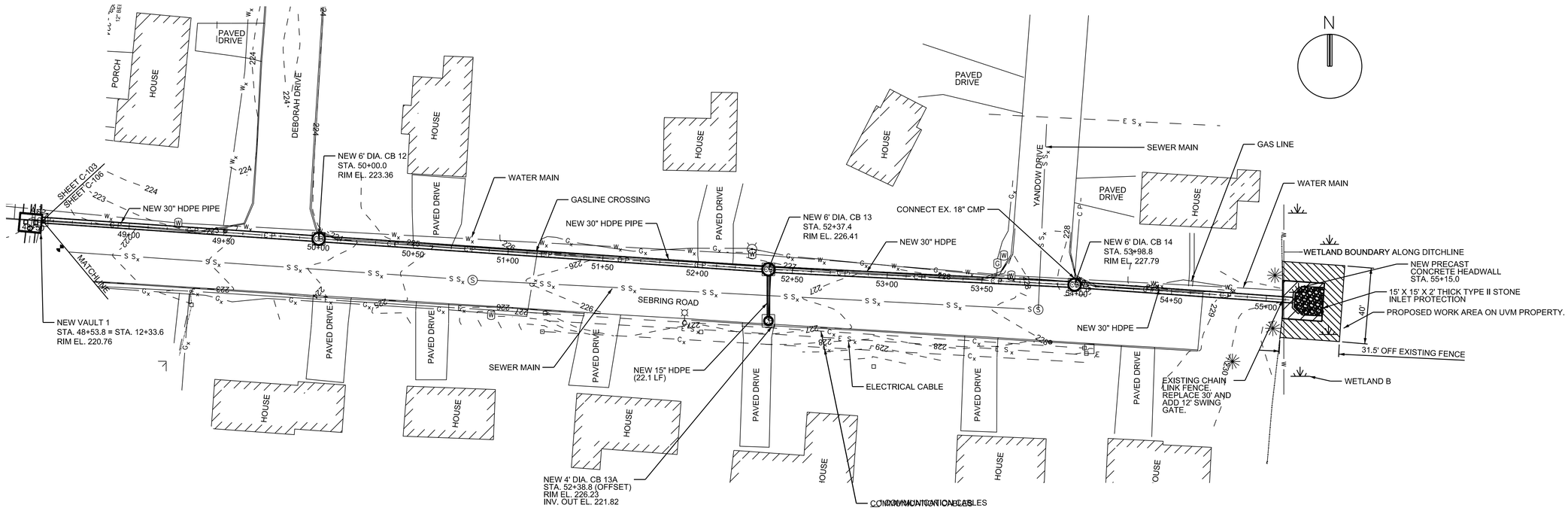

SITE PLAN

30' 20' 10' 0 30'

SCALE: 1"= 30'-0"

NOTE:

1. UNKNOWN NUMBER AND LOCATION OF BASEMENT DRAIN LINES EXIST. CONTRACTOR TO TIE BASEMENT DRAINS TO STORM DRAINAGE STRUCTURES, SEE STORM DRAIN MANHOLE DETAIL

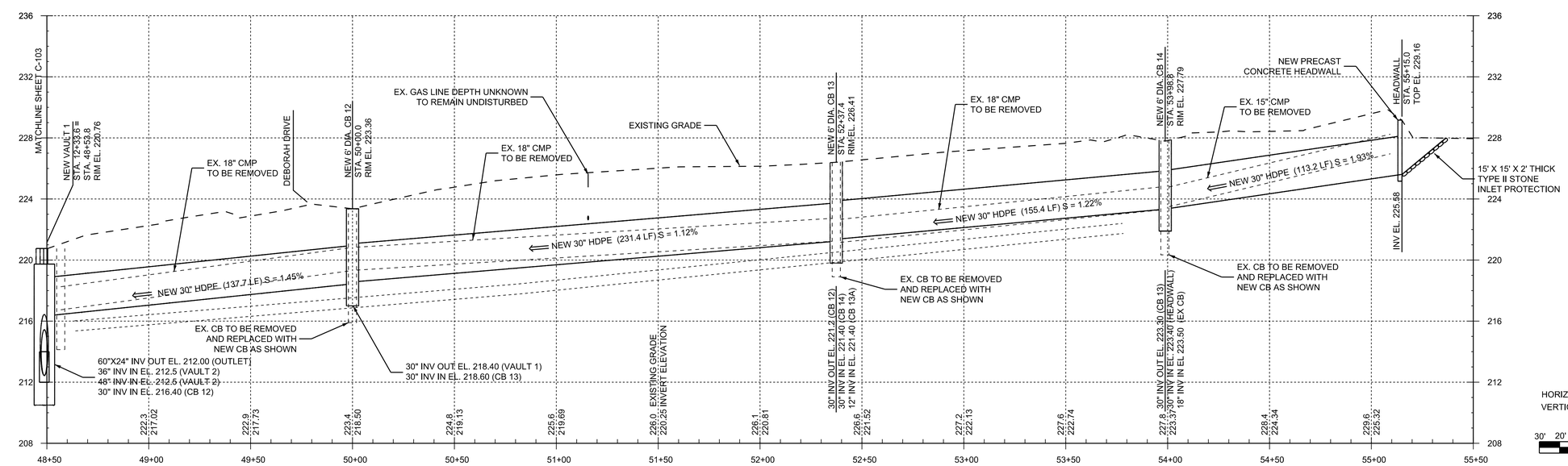

PROFILE

HORIZONTAL SCALE: 1"= 30'-0"

VERTICAL SCALE: 1"= 4'-0"

30' 20' 10' 0 30'

4' 0 1' 2' 3' 4'

NOTE: PIPE LENTHS ARE PROVIDED FOR GENERAL INFORMATION. PIPE LENGTHS SHALL BE FIELD VERIFIED BASED ON ACTURAL STRUCTURE PLACEMENT

US Army Corps of Engineers New York District

MARK	DESCRIPTION	DATE	APPR.	MARK	DESCRIPTION	DATE	APPR.

DESIGNED BY: CJK | DATE: MAY 2015
DWN BY: AS | CKD BY: MTM | SOLICITATION NO.:
SUBMITTED BY: D & K | CONTRACT NO.:
FILE NAME: ...\DGN\120808LH_C-106.dgn
SIZE: ANSI D | PLOTTED BY: DUBOIS & KING | PLOT DATE: 5/11/2015

U. S. ARMY ENGINEER DISTRICT
NEW YORK
http://www.nan.usace.army.mil

DuBois & King INC.

LAUREL HILL
STORM WATER IMPROVEMENTS
SOUTH BURLINGTON, VERMONT

SEBRING DRIVE STORMDRAIN
SITE PLAN AND PROFILE
STA. 48+50 TO STA. 55+50

SHEET REFERENCE NUMBER
C-106

SHEET 09 OF 15

Submitted by: DUBOIS & KING Plot Date: 5/11/2015 2:18:26 PM
...\DGN\120808LH_C-106.dgn

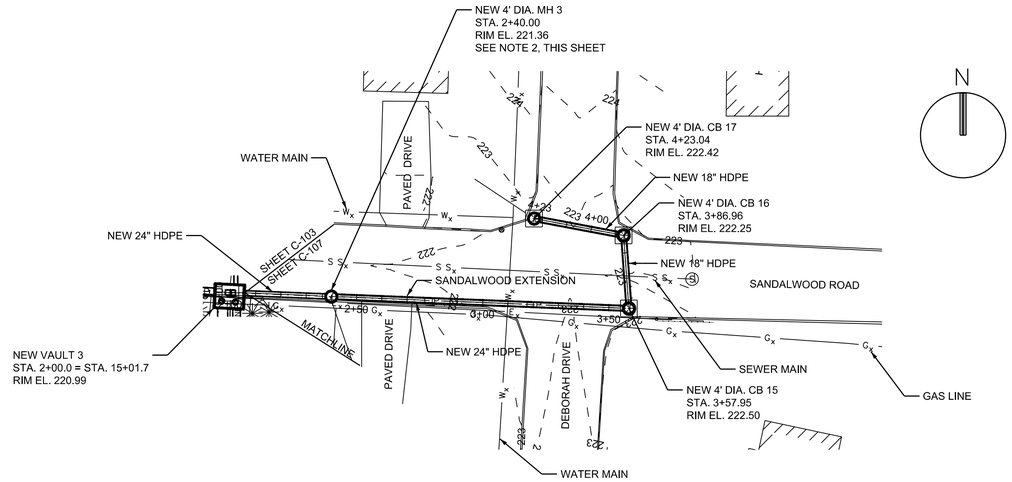

SITE PLAN

30' 20' 10' 0 30'

SCALE: 1"= 30'-0"

NOTE:

1. UNKNOWN NUMBER AND LOCATION OF BASEMENT DRAIN LINES EXIST. CONTRACTOR TO TIE BASEMENT DRAINS TO STORM DRAINAGE STRUCTURES, SEE STORM DRAIN MANHOLE DETAIL

2. NEW MH 3 IS INTENDED TO PROVIDE A LOCATION TO CONNECT POSSIBLE EXISTING YARD DRAIN AND/OR FOUNDATION DRAIN FROM ADJACENT HOUSE. CONTRACTOR SHALL CONFIRM EXISTENCE OF THE DRAIN. IF DRAIN DOES NOT EXIST, MH 3 SHALL BE RELOCATED IN THE FIELD TO STA 2+80.0 WITH ELEVATIONS ADJUSTED UPWARD BY 0.40 FEET.

LEGEND (EXISTING)

- WETLANDS
- 8" APPLE, 20" PINE — TREES
- LIGHT POLE
- SEWER MANHOLE
- CATCH BASIN
- WATER SHUT OFF
- GAS SHUT OFF
- ELECTRICAL BOX
- HORIZONTAL VERTICAL CONTROL
- BM EL. 221.46 — BENCHMARK
- EDGE OF PAVEMENT
- S S$_x$ — SEWER MAIN
- C P — STORM DRAIN
- W$_x$ — WATER MAIN
- C$_x$ — UNDERGROUND COMMUNICATIONS
- E$_x$ — OVERHEAD ELECTRICAL
- E S$_x$ — BURRIED ELECTRICAL
- G$_x$ — UNDERGROUND NATURAL GAS
- FENCE
- W — WETLAND BOUNDARY

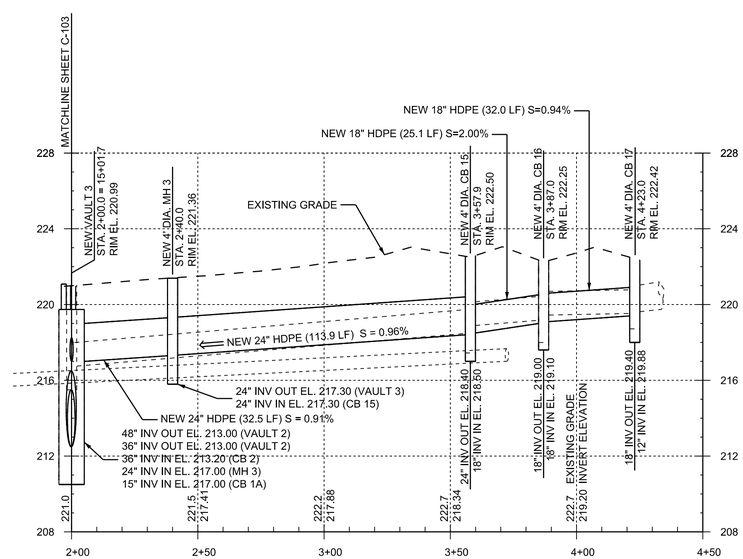

SANDALWOOD EXTENSION

NOTE: PIPE LENTHS ARE PROVIDED FOR GENERAL INFORMATION. PIPE LENGTHS SHALL BE FIELD VERIFIED BASED ON ACTURAL STRUCTURE PLACEMENT

PROFILE

HORIZONTAL SCALE: 1"= 30'-0"
VERTICAL SCALE: 1"= 4'-0"

30' 20' 10' 0 30'

4' 0 1' 2' 3' 4'

US Army Corps of Engineers New York District

MARK	DESCRIPTION	DATE	APPR.	MARK	DESCRIPTION	DATE	APPR.

DESIGNED BY: CJK | DATE: MAY 2015
DWN BY: AS | CKD BY: MTM | SOLICITATION NO.:
SUBMITTED BY: D & K | CONTRACT NO.:
FILE NAME: ...\DGN\120808LH_C-107.dgn
SIZE: ANSI D | PLOTTED BY: DUBOIS & KING | PLOT DATE: 5/11/2015

U. S. ARMY ENGINEER DISTRICT NEW YORK
http://www.nan.usace.army.mil

DuBois & King inc.

LAUREL HILL
STORM WATER IMPROVEMENTS
SOUTH BURLINGTON, VERMONT

SANDALWOOD ROAD
SITE PLAN AND PROFILES
DETENTION AND EXTENSION

SHEET REFERENCE NUMBER
C-107
SHEET 10 OF 15

MAY 2010 NYD A/E BORDER
Submitted by: DUBOIS & KING Plot Date: 5/11/2015 2:19:05 PM
...\DGN\120808LH_C-107.dgn

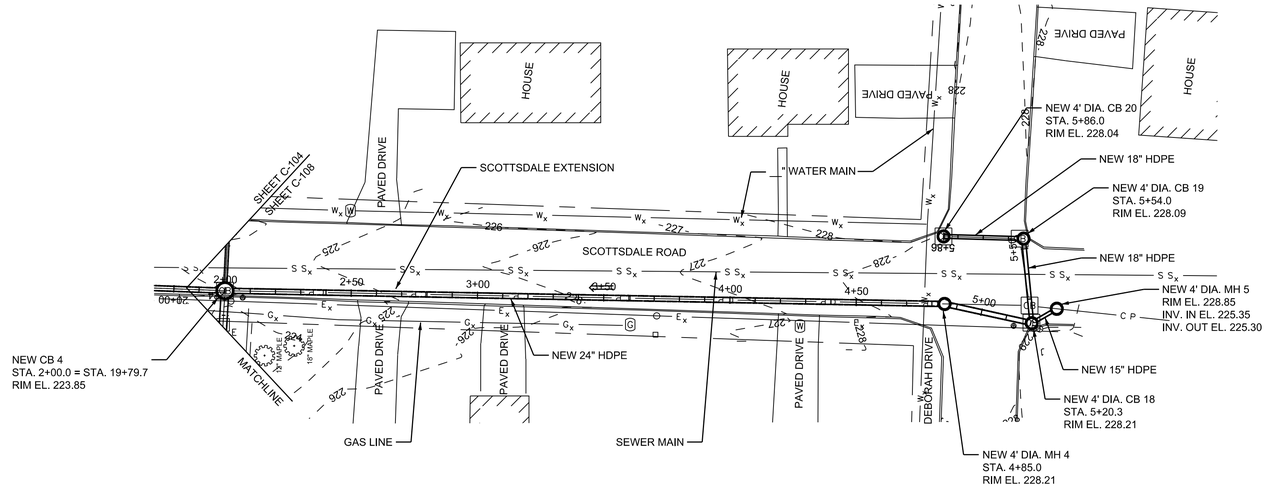

SITE PLAN

30' 20' 10' 0 30'

SCALE: 1"= 30'-0"

NOTE:

1. UNKNOWN NUMBER AND LOCATION OF BASEMENT DRAIN LINES EXIST. CONTRACTOR TO TIE BASEMENT DRAINS TO STORM DRAINAGE STRUCTURES, SEE STORM DRAIN MANHOLE DETAIL

LEGEND (EXISTING)

- WETLANDS
- 6" APPLE / 20" PINE — TREES
- LIGHT POLE
- SEWER MANHOLE
- CB — CATCH BASIN
- W — WATER SHUT OFF
- GAS SHUT OFF
- ELECTRICAL BOX
- HORIZONTAL VERTICAL CONTROL
- BM EL. 221.46 — BENCHMARK
- EDGE OF PAVEMENT
- $S\ S_x$ — SEWER MAIN
- C P — STORM DRAIN
- W_x — WATER MAIN
- C_x — UNDERGROUND COMMUNICATIONS
- E_x — OVERHEAD ELECTRICAL
- $E\ S_x$ — BURRIED ELECTRICAL
- G_x — UNDERGROUND NATURAL GAS
- FENCE
- W — WETLAND BOUNDARY
- PROPERTY BOUNDARY
- RIGHT OF WAY

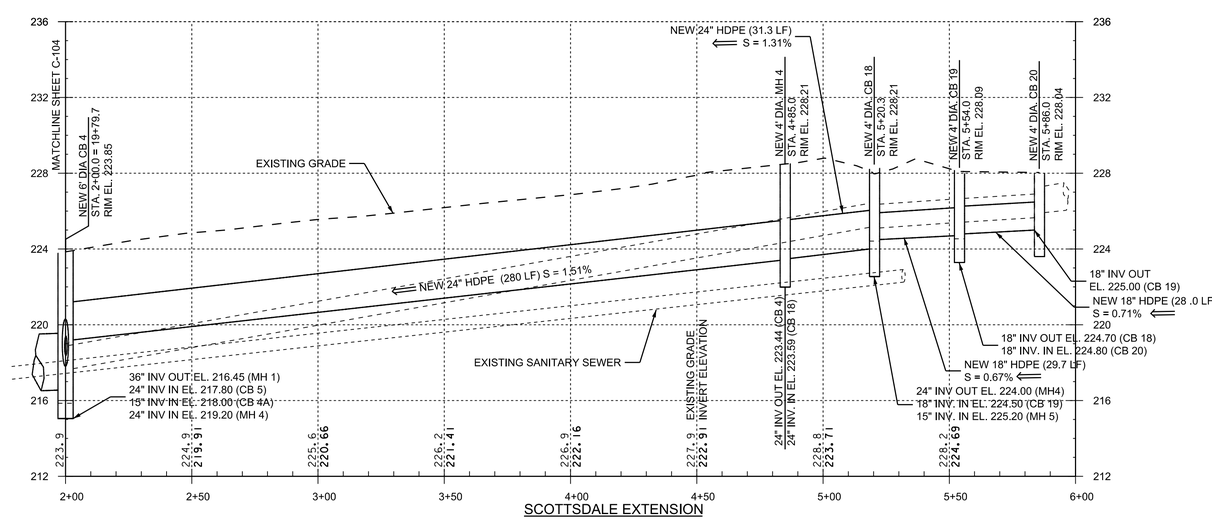

SCOTTSDALE EXTENSION

NOTE: PIPE LENTHS ARE PROVIDED FOR GENERAL INFORMATION. PIPE LENGTHS SHALL BE FIELD VERIFIED BASED ON ACTURAL STRUCTURE PLACEMENT

PROFILE

HORIZONTAL SCALE: 1"= 30'-0"
VERTICAL SCALE: 1"= 4'-0"

30' 20' 10' 0 30'

4' 0 1' 2' 3' 4'

US Army Corps of Engineers
New York District

MARK	DESCRIPTION	DATE	APPR.	MARK	DESCRIPTION	DATE	APPR.

U. S. ARMY ENGINEER DISTRICT
NEW YORK
http://www.nan.usace.army.mil

DESIGNED BY: CJK | DATE: MAY 2015
DWN BY: AS | CKD BY: MTM | SOLICITATION NO.:
SUBMITTED BY: D & K | CONTRACT NO.:
FILE NAME: ...\DGN\120808LH_C-108.dgn
SIZE: ANSI D | PLOTTED BY: DUBOIS & KING | PLOT DATE: 5/11/2015

DuBois & King INC.

LAUREL HILL
STORM WATER IMPROVEMENTS
SOUTH BURLINGTON, VERMONT

SCOTTSDALE ROAD
SITE PLAN AND PROFILES
DETENTION AND EXTENSION

SHEET REFERENCE NUMBER
C-108
SHEET 11 OF 15

MAY 2010 NYD A/E BORDER

Submitted by: DUBOIS & KING
...\DGN\120808LH_C-108.dgn
Plot Date: 5/11/2015 2:20:01 PM

MAY 2010 NYD A/E BORDER

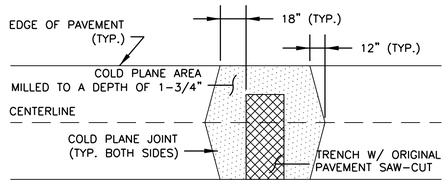

TRANSVERSE PATCH MORE THAN HALF THE WIDTH OF TRAVEL LANE

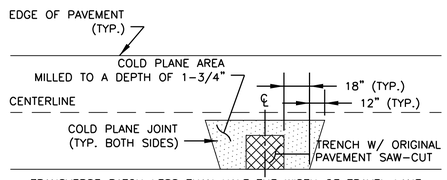

TRANSVERSE PATCH LESS THAN HALF THE WIDTH OF TRAVEL LANE

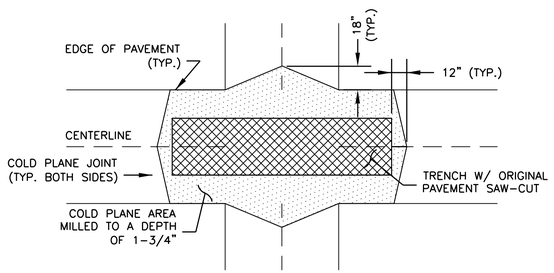

INTERSECTION PATCH

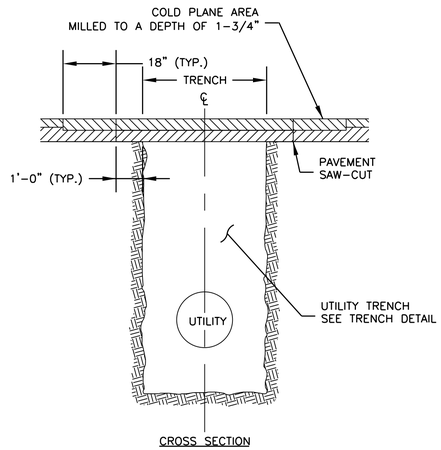

CROSS SECTION

NOTES:

1. PRIOR TO ALL TRENCH EXCAVATIONS EXISTING PAVEMENT SHALL BE SAW-CUT. ANY UNDERMINED AREAS THAT INADVERTENTLY DEVELOP DURING CONSTRUCTION ACTIVITIES SHALL BE REPAIRED.
2. TRENCH BACKFILL SHALL BE IN ACCORDANCE TO ASSOCIATED UTILITY REQUIREMENTS.
3. A TEMPORARY 3-INCH DEPTH OF NHDOT 304.11 HOT BITUMINOUS MATERIAL SHALL BE PLACED IN TWO (2) 1-1/2" LIFTS. TEMPORARY PATCH SHALL CURE FOR 30-DAYS.
4. AFTER PAVEMENT CURE PERIOD HAS BEEN COMPLETED, PAVEMENT AREA SHALL BE MILLED TO A DEPTH OF 1-3/4" IN ACCORDANCE TO THE PLAN LAYOUTS PROVIDING A MINIMUM 18" OVERLAP ONTO EXISTING UNDISTURBED PAVEMENT.
5. TACK ALL PAVEMENT EDGES PRIOR TO PLACEMENT OF PERMANENT BITUMINOUS MATERIAL.
6. PLACE 1-3/4" OF NHDOT 304.11 HOT BITUMINOUS MATERIAL.

PAVEMENT REPAIR DETAIL

NOT TO SCALE

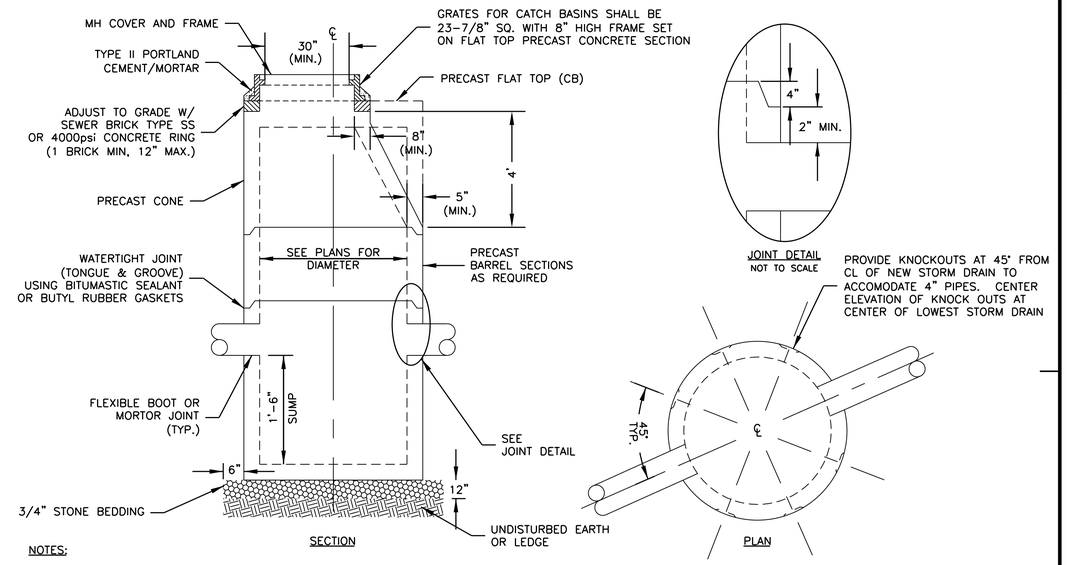

NOTES:

1. PRECAST SECTIONS SHALL BE 5" THICK WITH 0.12 SQ.IN/LF AREA OF STEEL REINFORCEMENT OR 8" THICK UNREINFORCED.
2. PRECAST SECTIONS SHALL MEET HS-20 LOADING, CONSIST OF CONCRETE THAT IS A MINIMUM OF 4000psi @28 DAYS AND SHALL BE MANUFACTURED IN ACCORDANCE WITH ASTM C-478; LATEST REVISION.
3. SEE PLANS FOR STRUCTURE SIZES.

CATCH BASIN/DRAIN MANHOLE DETAIL

NOT TO SCALE

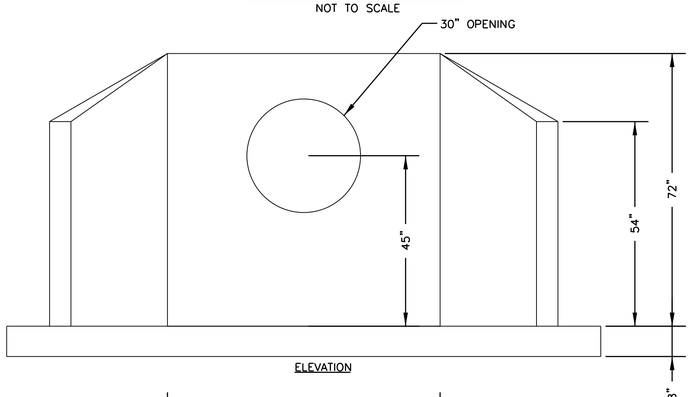

ELEVATION

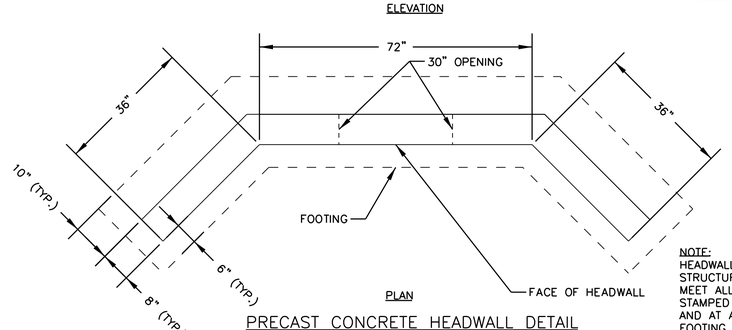

PLAN

NOTE:
HEADWALL DETAIL PROVIDED FOR DIMENSIONAL INFORMATION ONLY. A PRECAST STRUCTURE SHALL BE PROVIDED AND DESIGNED BY PRECAST SUPPLIER TO MEET ALL APPROPRIATE CODES AND STANDARDS. SUBMITTAL THAT IS STAMPED BY A PROFESSIONAL ENGINEER LICENSED IN VERMONT IS REQUIRED AND AT A MINIMUM, SHALL INCLUDE DETAILS OF HEADWALL, WINGWALLS, FOOTING, AND PENETRATIONS.

PRECAST CONCRETE HEADWALL DETAIL

NOT TO SCALE

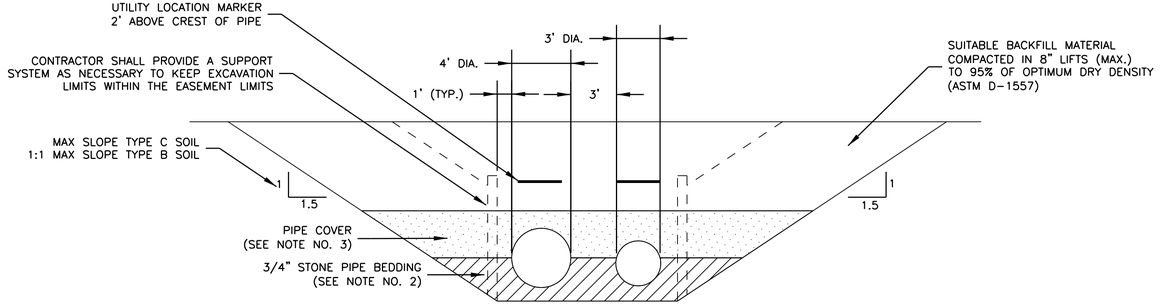

NOTE:
THESE TRENCH DETAILS ARE APPLICABLE TO SINGLE PIPE INSTALLATIONS

NOTES:

1. ALL EXCAVATION MUST MEET OSHA STANDARDS.
2. BEDDING MATERIAL SHALL BE FULL WIDTH OF TRENCH. BEDDING MATERIAL SHALL BE 6" BELOW PIPE (IN EARTH) OR 12" BELOW PIPE (IN LEDGE) UP TO SPRING LINE OF PIPE.
3. PIPE COVER MATERIAL SHALL BE FULL WIDTH OF TRENCH FROM SPRING LINE UP TO 12" (MINIMUM) ABOVE CREST OF PIPE. PIPE COVER MATERIAL SHALL BE SCREENED GRAVEL
4. CONTRACTOR MUST PROTECT EXISTING STRUCTURES, TREES, OR OTHER ITEMS THAT ARE PRESENT BETWEEN THE PERMANENT AND TEMPORARY EASEMENT LIMITS.
5. WHERE REASONABLY POSSIBLE, THE CONTRACTOR SHALL UTILIZE A TRENCH SUPPORT SYSTEM TO MINIMIZE EXCAVATION

PIPE TRENCH DETAILS

NOT TO SCALE

US Army Corps of Engineers
New York District

MARK	DESCRIPTION	DATE	APPR.	MARK	DESCRIPTION	DATE	APPR.

DESIGNED BY: CJK | DATE: MAY 2015
DWN BY: AS | CKD BY: MTM | SOLICITATION NO.:
SUBMITTED BY: D & K | CONTRACT NO.:
FILE NAME: ...\DGN\120808LH_C-501.dgn
SIZE: ANSI D | PLOTTED BY: DUBOIS & KING | PLOT DATE: 5/11/2015

U. S. ARMY ENGINEER DISTRICT
NEW YORK
http://www.nan.usace.army.mil

DuBois & King inc.

LAUREL HILL
STORM WATER IMPROVEMENTS
SOUTH BURLINGTON, VERMONT

STORM DRAIN DETAILS

SHEET REFERENCE NUMBER
C-501
SHEET 12 OF 15

Submitted by: DUBOIS & KING
...\DGN\120808LH_C-501.dgn
Plot Date: 5/11/2015 2:20:42 PM

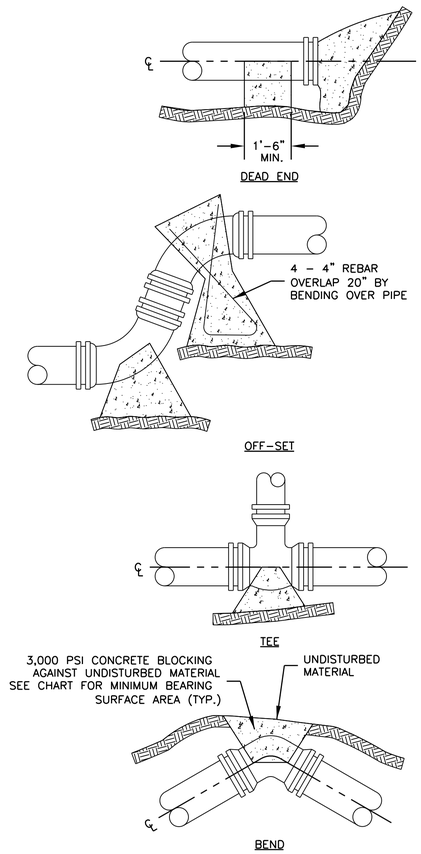

CAST-IN-PLACE CONCRETE THRUST BLOCK BEARING SURFACE AREA TABLE (S.F.)			
PIPE SIZE (IN)	SOFT WET CLAY, SAND OR SILT	DRY SAND	COMPACT COARSE SAND OR GRAVEL HARDPAN
DEAD END OR TEE			
2	2	2	2
4	4	2	2
6	9	5	3
8	16	8	5
10	24	12	8
12	34	17	12
¼ BEND			
2	2	2	2
4	2	2	2
6	4	2	2
8	7	4	3
10	10	5	4
12	15	7	5
⅛ BEND			
2	2	2	2
4	2	2	2
6	2	2	2
8	3	2	2
10	5	3	2
12	7	4	3
1/16 BEND			
2	2	2	2
4	2	2	2
6	2	2	2
8	2	2	2
10	3	2	2
12	4	2	2

WATER MAIN THRUST BLOCK DETAIL

NOT TO SCALE

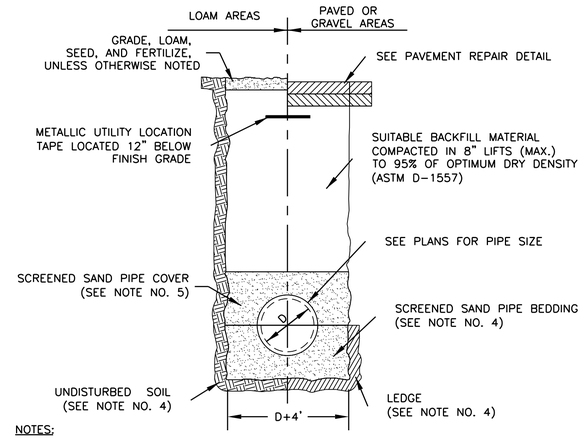

NOTES:

1. ALL MATERIALS SHALL MEET APPLICABLE AWWA SPECIFICATIONS
2. ALL EXCAVATION MUST MEET OSHA STANDARDS
3. PIPE DIAMETERS EQUAL TO OR LESS THAN 2-INCHES SHALL BE TYPE "K" COPPER TUBING. PIPE DIAMETERS GREATER THAN 2-INCHES SHALL BE DUCTILE IRON PIPE CLASS 52.
4. BEDDING MATERIAL SHALL BE FULL WIDTH OF TRENCH. BEDDING MATERIAL SHALL BE 6" BELOW PIPE (IN EARTH) OR 12" BELOW PIPE (IN LEDGE) UP TO SPRING LINE OF PIPE.
5. SAND COVER/CUSHION MATERIAL SHALL BE FULL WIDTH OF TRENCH. SAND MATERIAL SHALL BE FROM SPRING LINE UP TO 12" (MINIMUM) ABOVE CREST OF PIPE.
6. ALL WATER MAINS AND SERVICES SHALL MAINTAIN A MINIMUM COVER OF 5'-6". IN THE EVENT THAT MINIMUM COVER IS NOT FEASIBLE, PIPE SHALL BE INSULATED WITH A MINIMUM OF 2" RIGID WRAP-AROUND INSULATION WITH PVC JACKET

WATER MAIN/SERVICE PIPE TRENCH DETAIL

NOT TO SCALE

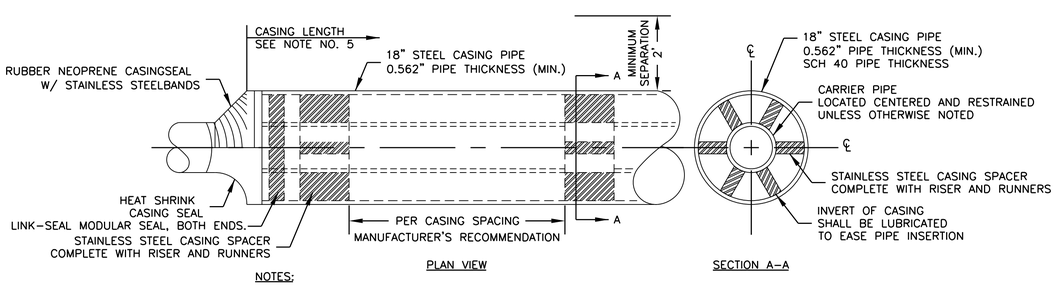

NOTES:

1. ALL EXCAVATION MUST MEET OSHA STANDARDS.
2. PIPE LEAKAGE TESTING SHALL COMPLY WITH LOCAL OR STATE REGULATIONS, WHICHEVER IS MORE STRICT.
3. RUBBER NEOPRENE CASING SEAL WITH STAINLESS STEEL BANDS OR HEAT SHRINK CASING SEAL ARE ACCEPTABLE. INSTALLATION SHALL FOLLOW MANUFACTURER'S RECOMMENDATION TO PROVIDE A WATER-TIGHT SEAL.
4. CASING PIPE LENGTH SHALL BE CALCULATED AS FOLLOWS: OUTSIDE PIPE DIAMETER (OD)+ [2 x (1.5 x MIN. SEPARATION)] + 12" OR AS IDENTIFIED ON PLANS, WHICHEVER IS GREATER

UTILITY CASING DETAIL

NOT TO SCALE

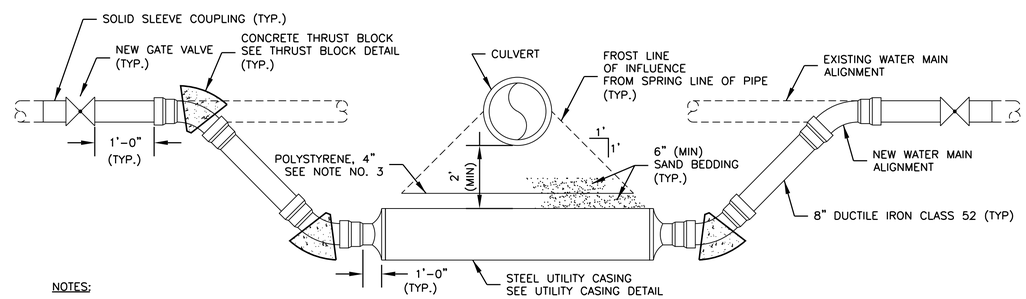

NOTES:

1. ALL EXCAVATION MUST MEET OSHA STANDARDS.
2. WATER PIPE LEAKAGE TESTING SHALL COMPLY WITH LOCAL OR STATE REGULATIONS, WHICHEVER IS MORE STRICT.
3. POLYSTYRENE RIGID INSULATION SHALL BE INSTALLED WHEN CASING/CULVERT SEPARATION IS LESS THAN 4'. INSULATION SHALL BE LOCATED 6-INCHES ABOVE CASING PIPE AND EXTEND TO THE LIMITS OF FROST LINE OF INFLUENCE + 12" EITHER SIDE OF O.D. OF CASING.
4. ALL JOINTS TO BE MECHANICALLY RESTRAINED INCLUDING THRUST RESTRAINT RODS BETWEEN GATE VALVES.
5. THE CARRIER PIPE SHALL CONSIST OF A SINGLE PIPE LENGTH WITHIN THE CASING. NO JOINTS WILL BE ALLOWED WITHIN THE CASING.

CULVERT CROSSING/WATER MAIN RELOCATION DETAIL

NOT TO SCALE

US Army Corps of Engineers New York District

MARK	DESCRIPTION	DATE	APPR.	MARK	DESCRIPTION	DATE	APPR.

U.S. ARMY ENGINEER DISTRICT NEW YORK http://www.nan.usace.army.mil

DuBois & King INC.

DESIGNED BY: CJK | DATE: MAY 2015
DWN BY: AS | CKD BY: MTM | SOLICITATION NO.:
SUBMITTED BY: D & K | CONTRACT NO.:
FILE NAME: ...\DGN\12080BLH_C-502.dgn
SIZE: ANSI D | PLOTTED BY: DUBOIS & KING | PLOT DATE: 5/11/2015

LAUREL HILL
STORM WATER IMPROVEMENTS
SOUTH BURLINGTON, VERMONT

WATER RELOCATION DETAILS

SHEET REFERENCE NUMBER
C-502
SHEET 13 OF 15

MAY 2010 NYD A/E BORDER
Submitted by: DUBOIS & KING ...\DGN\12080BLH_C-502.dgn Plot Date: 5/11/2015 2:21:15 PM

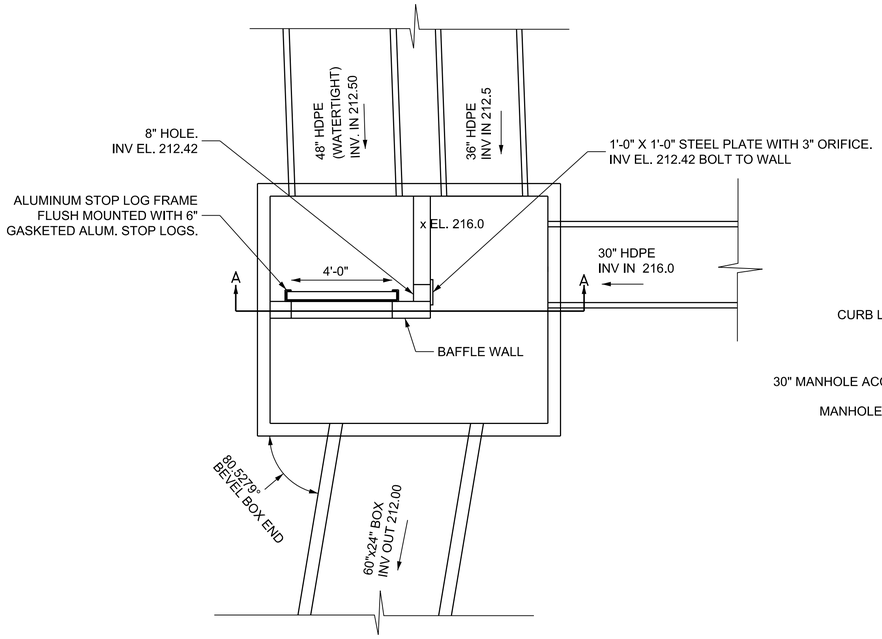

STORMDRAIN STRUCTURE
VAULT 1
INTERIOR PLAN

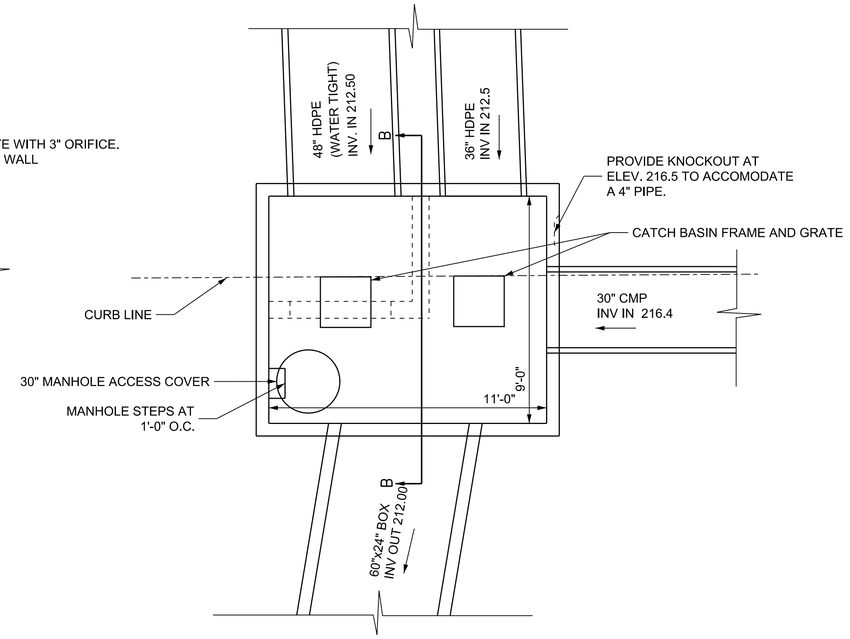

STORMDRAIN STRUCTURE
VAULT 1
PLAN

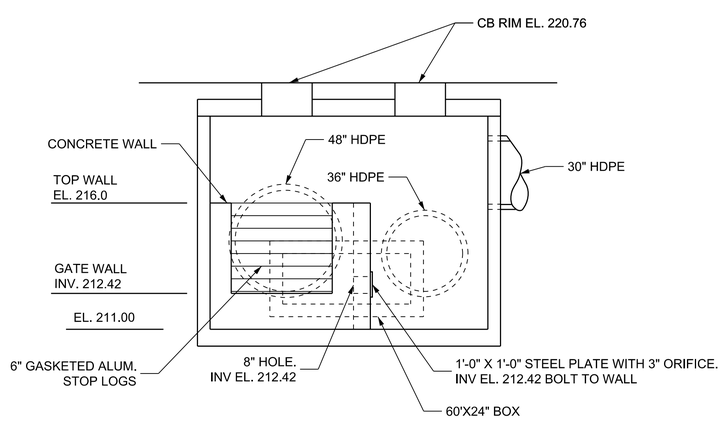

STORMDRAIN STRUCTURE
VAULT 1
SECTION A–A

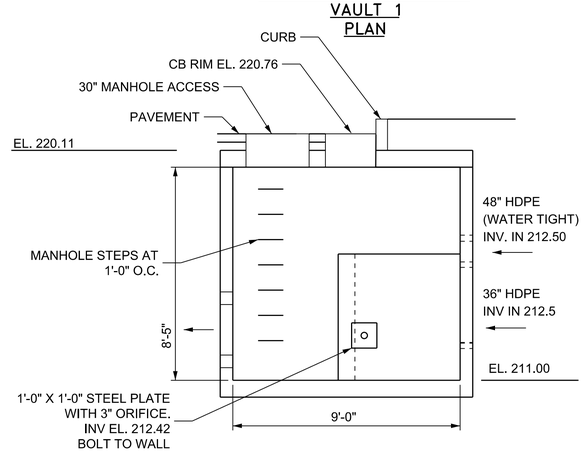

STORMDRAIN STRUCTURE
VAULT 1
SECTION B–B

3' 2' 1' 0 3'
SCALE

NOTES:

1. VAULT 1 SHALL BE A PRECAST CONCRETE STRUCTURE CAPABLE OF SUPPORTING A H20 LOADING.

2. ALL JOINTS INCLUDING PIPE ENTRYS SHALL BE WATERTIGHT.

3. SUBMITTAL REQUIRED.

US Army Corps
of Engineers
New York District

MARK	DESCRIPTION	DATE	APPR.	MARK	DESCRIPTION	DATE	APPR.

DESIGNED BY: CJK | DATE: MAY 2015
DWN BY: AS | CKD BY: MTM | SOLICITATION NO.:
SUBMITTED BY: D & K | CONTRACT NO.:
FILE NAME: ...\DGN\120808LH_C-503.dgn
SIZE: ANSI D | PLOTTED BY: DUBOIS & KING | PLOT DATE: 5/11/2015

U. S. ARMY ENGINEER DISTRICT
NEW YORK
http://www.nan.usace.army.mil

DuBois & King inc.

LAUREL HILL
STORM WATER IMPROVEMENTS
SOUTH BURLINGTON, VERMONT

VAULT 1
PLAN AND SECTIONS

SHEET
REFERENCE
NUMBER
C-503
SHEET 14 OF 15

MAY 2010 NYD A/E BORDER

Submitted by: DUBOIS & KING
...\DGN\120808LH_C-503.dgn
Plot Date: 5/11/2015 2:21:59 PM

MAY 2010 NYD A/E BORDER

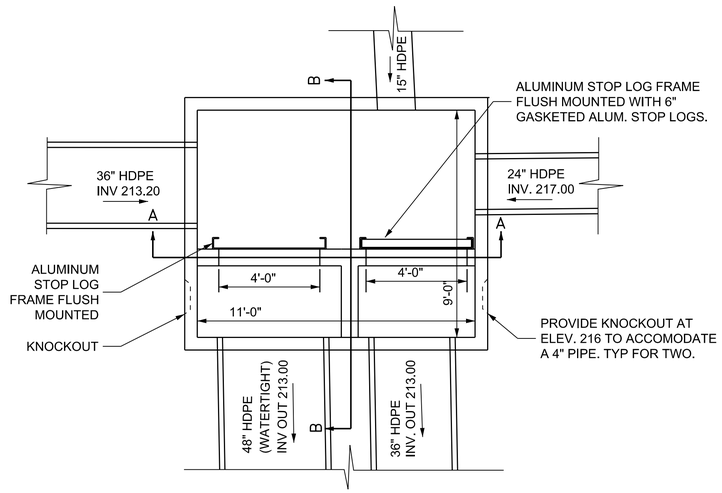

STORMDRAIN STRUCTURE
VAULT 3
INTERIOR PLAN

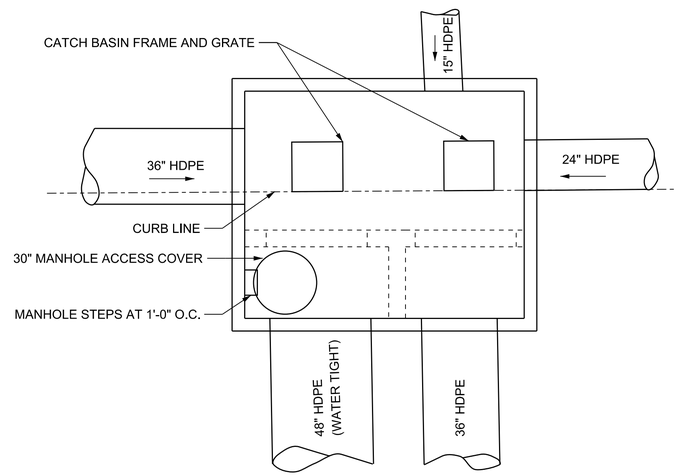

STORMDRAIN STRUCTURE
VAULT 3
PLAN

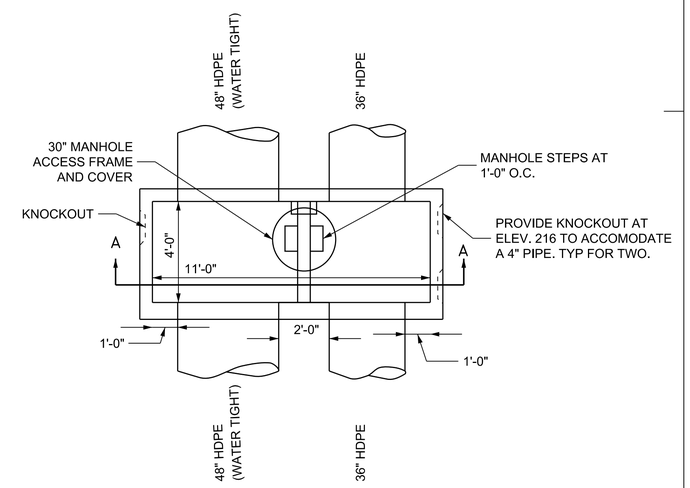

STORMDRAIN STRUCTURE
VAULT 2
PLAN

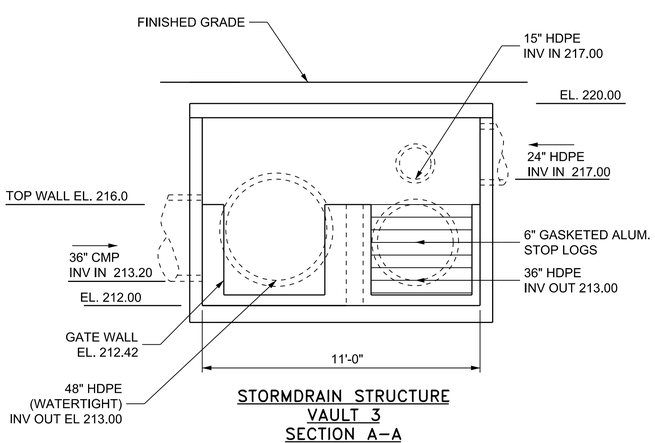

STORMDRAIN STRUCTURE
VAULT 3
SECTION A–A

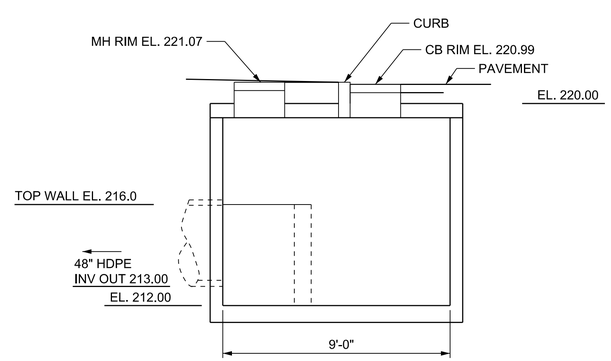

STORMDRAIN STRUCTURE
VAULT 3
SECTION B–B

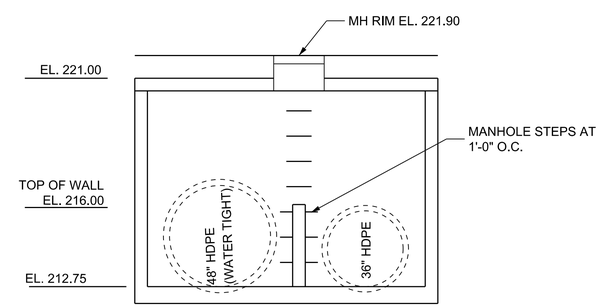

STORMDRAIN STRUCTURE
VAULT 2
SECTION A–A

NOTES:

1. VAULT 1 SHALL BE A PRECAST CONCRETE STRUCTURE CAPABLE OF SUPPORTING A H20 LOADING.

2. ALL JOINTS INCLUDING PIPE ENTRYS SHALL BE WATERTIGHT.

3. SUBMITTAL REQUIRED.

3' 2' 1' 0 3'
SCALE

US Army Corps of Engineers
New York District

MARK	DESCRIPTION	DATE	APPR.	MARK	DESCRIPTION	DATE	APPR.

DESIGNED BY: CJK | DATE: MAY 2015
DWN BY: AS | CKD BY: MTM | SOLICITATION NO.:
SUBMITTED BY: D & K | CONTRACT NO.:
FILE NAME: ...\DGN\120808LH_C-504.dgn
SIZE: ANSI D | PLOTTED BY: DUBOIS & KING | PLOT DATE: 5/11/2015

U. S. ARMY ENGINEER DISTRICT
NEW YORK
http://www.nan.usace.army.mil

DuBois & King inc.

LAUREL HILL
STORM WATER IMPROVEMENTS
SOUTH BURLINGTON, VERMONT

VAULT 2 & VAULT 3
PLAN AND SECTIONS

SHEET REFERENCE NUMBER
C-504
SHEET 15 OF 15

Submitted by: DUBOIS & KING
...\DGN\120808LH_C-504.dgn
Plot Date: 5/11/2015 2:22:42 PM

Appendix C

Pertinent Correspondence

DEPARTMENT OF THE ARMY
NEW YORK DISTRICT, CORPS OF ENGINEERS
JACOB K. JAVITS FEDERAL BUILDING
NEW YORK, N.Y. 10278-0090

REPLY TO
ATTENTION OF
Environmental Analysis Branch

July 8, 2015

Mr. Tom Chapman
Field Supervisor
U.S. Fish and Wildlife Service
New England Field Office
70 Commercial Street, Suite 300
Concord, NH 03301

Dear Mr. Chapman:

The Army Corps of Engineers, New York District (District), The US Army Corps of Engineers (Corps), New York District (District), in partnership with the City of South Burlington (South Burlington), is proposing to implement multiple stormwater management measures in the Laurel Hill and Stonehedge neighborhoods of South Burlington, Chittenden County, Vermont.

To provide you with some background information, this project has been funded under Section 542 of the Water Resources Development Act of 2000 (WRDA) which authorizes the Secretary of the Army to establish a program for providing environmental assistance to non-Federal interests in the Lake Champlain Watershed.

For this particular project, the Corps is providing assistance to the City of South Burlington (City), the non-federal sponsor, in constructing the stormwater management measures designs originally developed by South Burlington. Therefore, we would like for you to be aware that no other alternatives will be developed or evaluated for this project. We would also like for you to be aware that given the Corps' main role as a partner is constructing the project, funds for the project do not include making extensive modifications to the design.

Due to the limited funds and limited scope of the project, it is requested that comments be submitted as a Regulatory Letter in lieu of a formal Fish and Wildlife Coordination Act Report. The Draft Environmental Assessment (Enclosure 1) is enclosed for your office's review. Please note that permits have been obtained from the state and are included in the Draft Environmental Assessment.

The District is anticipating awarding a construction contract in late August with construction commencing in September. Should any questions arise during your review, or additional information is needed, please contact Ms. Kimberly Rightler at (917) 790-8722.

Sincerely,

Peter Weppler
Chief, Environmental Analysis Branch

Enclosure

VERMONT AGENCY OF NATURAL RESOURCES
DEPARTMENT OF ENVIRONMENTAL CONSERVATION

INDIVIDUAL WETLAND PERMIT

In the matter of:

City of South Burlington Public Works, Tom DiPietro
104 Landfill Road, South Burlington, VT 05403

Application for the construction of a stormwater detention pond and other stormwater infrastructure improvements with proposed impacts to 16,639 square feet of wetland and 29,526 square feet of buffer zone.

Stonehedge Drive, South Burlington

File #: 2007-469
DEC ID #: EJ14-0071

Date of Decision: May 18, 2015
Decision: **Issued**
Expiration Date: May 18, 2020

Any activity in a Class I or Class II wetland or its associated buffer zone is prohibited unless it is an allowed use under the Vermont Wetland Rules (VWR) or unless it receives a permit allowing such activity. 10 V.S.A. § 913. Applicants for an individual permit for a proposed activity in any Class I or Class II wetland or its buffer zone must demonstrate that the proposed activity complies with the VWR and will have no undue adverse effects on protected functions and values. VWR § 9.5(a).

The Vermont Agency of Natural Resources (Agency) received an application dated February 10, 2014 and last revised March 10, 2015 from City of South Burlington Public Works, Tom DiPietro (permittee) seeking an individual Vermont Wetland Permit for a project involving activities in a wetland and associated buffer zone located in South Burlington, Vermont. The Agency gave notice of the application in accordance with the VWR. The Agency considered all comments received during the public comment period during review of the application and issuance of this permit.

DECISION AND PERMIT CONDITIONS

1. Based on the Findings contained in this permit below, the Secretary has determined that the proposed project will comply with 10 V.S.A. chapter 37 and the VWR and will have no undue adverse effect on protected functions and values of the wetland. The permittee has demonstrated that the project will have no undue adverse effects on the protected functions and values of the significant wetland and associated buffer zone, provided the project is conducted in accordance with the following conditions:

A. All activities in the wetland and buffer zone shall be completed, operated, and maintained as set forth in permit application #2007-469, the Wetland Mitigation Plan and the supporting materials submitted with the permit application. No material or substantial changes shall be made to the project without the prior written approval of the Vermont Wetlands Program. Project changes may require a permit amendment and additional public notice. Supporting materials to application #2007-469 include:

- "Stonehedge Stormwater Improvements, South Burlington, Vermont, 90% plans, August 2013," by Dubois and King, dated August 30, 2013. Includes sheets G-001, G-002, C-101, C-102, C-103, C-107, L-403, L-405, and C-503.
- "Wetland Impacts Plan", by Dubois and King, dated 6/25/13, last revised 03/03/*15*
- "Wetland Mitigation Landscaping Plan – L-405" and "Landscape Details – L-406," by Dubois and King, dated March 2015.
- Letter by Charlotte Brodie of Dubois and King with subject: "Stonehedge Stormwater Improvements; Response to Feb. 24, 2015 comments on reduction of impacts and mitigation plan," dated March 3, 2015.

B. The permittee shall record this permit in the land records of the Town of South Burlington for all properties subject to the permit. Within 30 days of the date of issuance of this permit, the permittee shall supply the Vermont Wetlands Program with a copy of the recording of this permit.

C. The permittee shall notify the Vermont Wetlands Program in writing or by email prior to the start of the approved project.

D. **Prohibitions:** No additional activities are allowed in the wetland and associated buffer zone without the approval of the Secretary unless such activities are allowed uses under VWR § 6. No draining, dredging, filling, grading, or alterations of the water flow is allowed. No cutting, clearing, or removal of vegetation within the wetland and buffer zone is allowed with the exception of the proposed project area as approved by this permit. The construction of the facility will be conducted in such a manner that no rutting, compaction or other soil disturbance shall occur within the wetland or buffer zone, other than those impacts specifically approved by this permit.

E. The permittee shall assign a compliance monitor to be on site during all site preparation and construction related activities taking place in the Class II wetland and buffer zone to assure compliance with the conditions of this permit. A preconstruction meeting will be scheduled with the monitor and Agency Wetlands Program prior to project commencement. The monitor will immediately notify the Agency of any non-permitted disturbance to the wetland or buffer zone. A site inspection with the Agency Wetlands Program will be scheduled within 20 days of the completion of construction and installation.

F. All construction activities in the wetland and adjacent 50-foot buffer zone shall be completed within five years of the issuance date of this permit or this permit will expire. Any request for an extension must be received by the Agency at least 30 days prior to the end of the five year period in order to prevent the expiration of the

permit. A request for extension may be considered a minor modification at the discretion of the Secretary. Pursuant to VWR § 9.1, projects may not be extended beyond ten years of the issuance date.

G. The wetland boundary delineation is valid for five years. The delineation will need to be re-evaluated by a qualified wetland consultant if the project is not constructed during the five-year period and a request for an extension is submitted.

H. Within 30 days of completion of the work approved by this permit, the permittee shall supply the Vermont Wetlands Section with a letter certifying that the project was constructed in compliance with the conditions of this permit.

I. A continuous line of orange snow fence or flagging tape shall be installed along the limits of disturbance prior to the start of site preparation and construction.

J. If a stormwater construction permit is obtained for this project, the erosion prevention and control requirements of that permit shall be followed. If a stormwater permit is not required, the permittee shall comply with the following: A continuous line of silt fence shall be properly installed by the permittee immediately upgradient of the snow fence or tape prior to any construction and shall be regularly maintained. Care shall be taken to ensure that silt fence is installed on the contour and not in areas of concentrated flow such as stream channels or ditches. Sediment shall be cleaned out before and after any significant storm event or when sediment has reached less than half the height of the fence. Removed sediments shall be disposed of in a stable, upland area outside the 50-foot buffer zone at least 100 feet from waters of the state and stabilized immediately with seed and mulch at a minimum. All other disturbed soils shall be seeded and mulched within 48 hours of final grading. All sediment barriers and construction fencing shall be removed following the successful establishment of vegetation.

K. The method of construction shall be that which presents the least disturbance of stream flow and prevents any discharge of sediment downstream. Stream flow at all times shall be diverted from the work area. The contractor's equipment shall be clean and well maintained, free of fuel, hydraulic, and gear oil leaks, especially if such equipment is to be used in or adjacent to the water. There shall be absolutely no discharge of uncured concrete to the stream flow. Pumping from excavation areas shall be discharged to an overland area or settling basin such that the effluent shall be essentially clarified before reentering the stream flow. All areas of stream bank disturbed during construction shall be suitably reshaped and stabilized with stone fill or a vegetative planting prior to completion of the project. Additionally, the extent of stream bank disturbance shall be strictly limited, and all existing vegetation maintained to the greatest degree practicable.

L. All contractors' equipment shall be cleaned so as to contain no observable soil or vegetation prior to work in wetlands and buffer zones to prevent the spread of invasive species. The permittee shall monitor the portion of the wetland in question annually during early July for five years following construction for the nuisance plant species purple loosestrife (*Lythrum salicaria*) and common reed (*Phragmites australis*). All nuisance plants found shall be pulled by hand and disposed of by

burial or burning in a non-wetland location. If hand pulling is not feasible, a state approved invasive species control plan is required.

2. The Secretary maintains continuing jurisdiction over this project and may at any time order that remedial measures be taken if it appears that undue adverse impacts to the protected functions and values of the wetland or buffer are occurring or will occur.

3. This permit does not relieve the permittee of the responsibility to comply with any other applicable federal, state, and local laws, regulations, and permits.

4. The permittee shall allow the Secretary or the Secretary's representatives, at reasonable times and upon presentation of credentials, to enter upon and inspect the permitted property for the purpose of ascertaining compliance with this permit, the VWR, and the Vermont Water Quality Standards, and to have access to and copy all records required to be prepared pursuant to this permit.

5. The Agency accepts no legal responsibility for any damage direct or indirect of whatever nature and by whomever suffered arising out of the approved project. This permit does not convey any property rights in either real or personal property, or any exclusive privileges, nor does it authorize any injury to public or private property, or any invasion of personal rights, or any infringement of federal, state, or local laws or regulations. This permit does not obviate the necessity of obtaining such federal, state, or local permits or approvals as may be required by law. Nothing in this permit shall be construed to preclude the institution of legal action or relieve the permittee from any responsibilities, liabilities, or penalties to which the permittee is or may be subject to under other laws.

6. Within 15 days of the date of the decision, the permittee, any person entitled to notice under VWR § 9.2, or any person who filed written comments regarding the permit application may request in writing reconsideration of the decision by the Secretary in accordance with VWR § 9.6.

7. Any person with an interest in this matter may appeal this decision pursuant to 10 V.S.A. § 917. Pursuant to 10 V.S.A. chapter 220, any appeal of this decision must be filed with the clerk of the Environmental Division of the Superior Court within 30 days of the date of the decision. The Notice of Appeal must specify the parties taking the appeal and the statutory provision under which each party claims party status; must designate the act or decision appealed from; must name the Environmental Division; and must be signed by the appellant or their attorney. In addition, the appeal must give the address or location and description of the property, project, or facility with which the appeal is concerned; the name of the permittee; and any permit involved in the appeal. The appellant must also serve a copy of the Notice of Appeal in accordance with Rule 5(b)(4)(B) of the Vermont Rules for Environmental Court Proceedings. For further information, see the Vermont Rules for Environmental Court Proceedings, available on line at www.vermontjudiciary.org. The address for the Environmental Division is: 2418 Airport Road, Suite 1, Barre, VT 05641 (Tel. # 802-828-1660).

FINDINGS

1. The Agency received a complete application from City of South Burlington Public Works, Tom DiPietro for Vermont Wetland Permit on March 10, 2015

2. The wetland and adjacent 50-foot buffer zone are located west of Stonehedge Drive in South Burlington.

3. Julie Foley, District Wetlands Ecologist, conducted a site visit to the subject property with Tom DiPietro of the City of Burlington and Charlotte Brodie of Dubois and King on June 14, 2014.

4. The subject wetland is identified as a palustrine wetland on the Vermont Significant Wetlands Inventory maps and therefore is designated as a Class II wetland under VWR § 4.6.

5. The wetland in question is described in detail in Sections 7 and 8 of the permit application. The subject wetland is at the northwestern end of an approximately 6-acre, largely forested complex. The subject wetland is the headwater to an unnamed tributary of Potash Brook.

6. The proposed project is described in detail in Sections 10 and 11 of the permit application. The project consists of construction of a stormwater detention pond and other stormwater infrastructure improvements.

7. Proposed impacts to the wetland and buffer zone, summarized in Section 12 of the permit application, are as follows:

Wetland Alteration:		**Buffer Zone Alteration:**	
Wetland Fill:	12,116 sq.ft.		
Temporary:	4,523 sq.ft.	Temporary:	3,427 sq.ft.
Other Permanent: :	0 sq.ft.	Permanent: :	26,099 sq.ft.
Total Wetland Impact	**16,639** sq.ft.	**Total Buffer Zone Impact:**	**29,526** sq.ft.

8. The protected functions of the wetland complex include the following: water storage for flood water and storm runoff (VWR § 5.1), surface and groundwater protection (VWR § 5.2), and erosion control through binding and stabilizing the soil (VWR § 5.10).

9. The protected functions of the subject wetland include the following: water storage for flood water and storm runoff (VWR § 5.1), surface and groundwater protection (VWR § 5.2), and erosion control through binding and stabilizing the soil (VWR § 5.10).

10. The following functions are either not present or are present at such a minimal level as to not be protected functions: fish habitat (VWR § 5.3), wildlife and migratory bird habitat (VWR § 5.4), exemplary wetland natural community (VWR § 5.5), threatened and endangered species habitat (VWR § 5.6), education and research in natural sciences (VWR § 5.7), and recreational value and economic benefits (VWR § 5.8).

11. The subject wetland is significant for the water storage for flood water and storm runoff function as demonstrated in Section 16 of the permit application. The detention basin will

increase the amount of water stored from development runoff, where the continuation of the current sediment load reaching the wetland over time would lower the water storage capacity. The downstream portion of the wetland will receive less sediment from the development. Based on the factors described in Section 16.2 of the application, as confirmed through a site visit by Agency staff, the proposed project will not result in an undue adverse impact to this function.

12. The wetland is significant for the surface and ground water protection function as described in Section 17 of the permit application. The project in general will decrease the amount of sediment and associated nutrients from reaching the wetland complex. By decreasing the load, it will lower the likelihood of nutrient overload and allow the wetland attenuate a more natural level of nutrient and sediment. Based on the factors described in Section 17.2 of the application, as confirmed through a site visit by Agency staff, the proposed project will not result in an undue adverse impact to this function.

13. The wetland is significant for the erosion control function demonstrated in Section 25 of the permit application. The majority of the wetland adjacent to the stream will remain and continue to serve an erosion control function. Based on the factors described in Section 25.2 of the application, as confirmed through a site visit by Agency staff, the proposed project will not result in an undue adverse impact to this function.

14. Under 10 V.S.A. § 913 and VWR § 9.5, the Secretary may authorize activities in a Class II wetland or in its buffer zone if the Secretary determines that it complies with the VWR and will have no undue adverse effect on the protected functions and values. Based on the permit application, the site visit(s) by Agency staff, and the foregoing findings and analysis, the Secretary has determined that the proposed project will have no undue adverse effects on the protected functions and values of the subject Class II wetlands.

15. Pursuant to VWR § 9.5(b), the permittee has demonstrated that the proposed activity in the subject wetland cannot practicably be located outside the wetland or on another site owned, controlled, or available to satisfy the basic project purpose. All practicable measures have been taken in this proposal to avoid adverse impacts on protected functions, as described in the application.

    The location of the stormwater basin is located on the low end of the property to capture and treat the greatest amount of stormwater runoff from the existing Stonehedge Development and existing infrastructure. The specific location was partially restricted by the presence of existing buried utilities. Necessary erosion control measures will be utilized during construction and all disturbed areas will be stabilized following construction to prevent discharges to the adjacent wetland and stream. Additionally, approximately 37,000 square feet of the impacted wetland will be enhanced by the removal of invasive giant reed and the reestablishment of native vegetation.

16. No comments were received during the public comment period.

David K. Mears, Commissioner
Department of Environmental Conservation

by: E-SIGNED by Laura Lapierre on 2015-05-18 19:18:06 GMT

Laura Lapierre, Program Manager
Wetlands Program
Watershed Management Division

Dated at Montpelier, Vermont
this eighteenth day of May, 2015

DM/LVPL

Print Form

Notice of Intent (NOI)

for Stormwater Discharges Associated with Construction Activity on

Low Risk Sites

Under Vermont Construction General Permit 3-9020

For Department Use Only
NOI Number: 7220-9020

VERMONT
ENVIRONMENTAL CONSERVATION

RECEIVED
JUN - 6 2014
WsMD

Submission of this completed Notice of Intent (NOI) constitutes notice that the entity in Section A intends to be authorized to discharge pollutants to waters of the State, from the project identified in Section C, under Vermont's Construction General Permit (CGP). Submission of the NOI constitutes notice that the party identified in Section A of this form has read, understands, and meets the eligibility conditions of the CGP; has determined that the project qualifies for coverage as a Low Risk project in conformance with Appendix A of the CGP; agrees to comply with all applicable terms and conditions of the CGP; understands that continued authorization under the CGP is contingent on maintaining eligibility for coverage; and that all applicable practices in the Low Risk Site Handbook for Erosion Prevention and Sediment Control must be implemented and maintained for the duration of construction activities. In order to be granted coverage, all information required on this form must be provided and an application fee of $**50** payable to the State of Vermont must be submitted.

A. Landowner Information

1a. Name: See attached. 1b. Contact (if applicable): _____

2. Mailing Address
a. Street/P.O. Box: _____

b. City/Town: _____ c. State: Vermont d. Zip: _____

3. Contact Information
a. Phone: _____ b. Fax: _____ c. Email: _____

B. Principal Operator Information *(if known)*

1. Name: TBD

2. Mailing Address
a. Street/P.O. Box: _____

b. City/Town: _____ c. State: Vermont d. Zip: _____

3. Contact Information
a. Phone: _____ b. Fax: _____ c. Email: _____

C. Application Preparer Information *(if applicable)*

1a.Name: DuBois & King, Inc. 1b. Contact (if applicable): Charlotte Brodie

2. Mailing Address:
a. Street/P.O. Box: 6 Green Tree Drive

b. City/Town: South Burlington c. State: Vermont d. Zip: 05403

3. Contact Information
a. Phone: 802-777-5272 b. Fax: _____ c. Email: cbrodie@dubois-king.com

See Filing Directions for Low Risk Projects

Form revised June 2012

Stonehedge Stormwater Improvements
Low Risk NOI, Attachment

A. Landowner Information

1a. (1) Kathleen Talbert, Master Board President, Stonehedge North Area Association
112 Stonehedge Drive, South Burlington, VT 05403, 802-598-7218, ktalb55@hotmail.com
(2) Heather Paine, Master Board President, Stonehedge South Area Association
D10, Stonehedge Drive, South Burlington, VT 05403, 802-793-6490, Heather.Paine@comcast.net

I:\120808L1A Stonehedge\Stormwater Const. Permit\Attachment to NOI.docx

D. Project Information

1. Project Name: Stonehedge Stormwater Improvements

2a. Is this project part of a Common Plan of Development[1]? ☑ Yes ☐ No
2b. If Yes, Name of Development: Stonehedge

3a. Does this project have any previously issued or pending stormwater discharge permits? ☑ Yes ☐ No
3b. If Yes, Prior NOI Number(s): 2-0100 (expired)

4. Location Address
a. Street: Stonehedge Drive b. City/Town: South Burlington

c. Latitude: 44 ° 26 ' 10 " d. Longitude: 73 ° 11 ' 53 " e. County: Chittenden

➲ Use DEC's Waterbody Identification (WBID) ArcGIS webpage *(click here)* to answer questions 5 and 6 below.

5. Name of receiving water(s)[2]: Potash Brook 6. Include a topographic location map.

7. Project Type: ☐ Residential ☐ Commercial ☐ Industrial ☐ Other: Stormwater Improvements

8. Total Area of Disturbance: 3.2 acres 9. Description of construction activities to be permitted (below):

Five new catch basins (approx. 38 SF each), new 18" HDPE storm drains totaling approximately 581', a new 43' long 2'X3' concrete box culvert, a new 692' long stone-lined ditch, a new stone headwall (approx. 30 SF) , new 36" storm drain totaling 632', three new bioretention areas totaling approximately 6,945, 6,300 and 8,305 SF respectively, new 72,000 SF stormwater treatment and detention pond, and a new 300 SF (approx.) pond outlet and control structure.

E. Public Notice Requirement

You must provide a copy of this complete NOI form to the municipal clerk for posting in the municipality in which the project is located. If the project and the related discharge(s) are located in different municipalities, then the completed NOI must be filed with the municipal clerk in each municipality. The municipal clerk must post the completed NOI. In order to be considered complete, you must include the date of posting.

Date of Posting at Municipal Office(s): June 4, 2014

Information for the Municipal Clerk regarding posting instructions can be found on **Page 4** of this NOI.

F. Certification Relating to the Accuracy of the Information Submitted

I hereby certify under penalty of law that this document and all attachments were prepared under my direction or supervision in accordance with a system designed to assure that qualified personnel properly gathered and evaluated the information submitted. Based on my inquiry of the person or persons who manage the system, or those persons directly responsible for gathering the information, the information submitted is, to the best of my knowledge and belief, true, accurate, and complete. I am aware that there are significant penalties for submitting false information, including the possibility of fine and imprisonment for knowing violations. I also certify that the applicable practices in The Low Risk Site Handbook for Erosion Prevention and Sediment Control will be implemented for the duration of the project for which this NOI is submitted.

Landowner Name: 1)Heather Paine 2) Kathleen Talbert, Presidents Title: Stonehedge North and South Area Assoc.

Signature: _____ Date: _____

Principal Operator: TBD Title: _____
(if known)

Signature: _____ Date: _____

Application Preparer: DuBois & King, Inc. Attn: Charlotte Brodie Title: Field Naturalist
(if applicable)

Signature: Charlotte N Brodie Date: 4/17/14

[1] "Common Plan of Development" is defined within the CGP 3-9020, Appendix C – Definitions, page A-12
[2] "Waters of the State" (i.e. receiving water) is defined within the CGP 3-9020, Appendix C – Definitions, page A-16

D. Project Information

1. Project Name: Stonehedge Stormwater Improvements

2a. Is this project part of a Common Plan of Development[1]? ☑ Yes ☐ No
2b. If Yes, Name of Development: Stonehedge

3a. Does this project have any previously issued or pending stormwater discharge permits? ☑ Yes ☐ No
3b. If Yes, Prior NOI Number(s): 2-0100 (expired)

4. Location Address
a. Street: Stonehedge Drive b. City/Town: South Burlington
c. Latitude: 44 ° 26 ' 10 " d. Longitude: 73 ° 11 ' 53 " e. County: Chittenden

➲ Use DEC's Waterbody Identification (WBID) ArcGIS webpage *(click here)* to answer questions 5 and 6 below.

5. Name of receiving water(s)[2]: Potash Brook 6. Include a topographic location map.

7. Project Type: ☐ Residential ☐ Commercial ☐ Industrial ☐ Other: Stormwater Improvements

8. Total Area of Disturbance: 3.2 acres 9. Description of construction activities to be permitted (below):
Five new catch basins (approx. 38 SF each), new 18" HDPE storm drains totaling approximately 581', a new 43' long 2'X3' concrete box culvert, a new 692' long stone-lined ditch, a new stone headwall (approx. 30 SF) , new 36" storm drain totaling 632', three new bioretention areas totaling approximately 6,945, 6,300 and 8,305 SF respectively, new 72,000 SF stormwater treatment and detention pond, and a new 300 SF (approx.) pond outlet and control structure.

E. Public Notice Requirement

You must provide a copy of this complete NOI form to the municipal clerk for posting in the municipality in which the project is located. If the project and the related discharge(s) are located in different municipalities, then the completed NOI must be filed with the municipal clerk in each municipality. The municipal clerk must post the completed NOI. In order to be considered complete, you must include the date of posting.

Date of Posting at Municipal Office(s): June 4, 2014

Information for the Municipal Clerk regarding posting instructions can be found on **Page 4** of this NOI.

F. Certification Relating to the Accuracy of the Information Submitted

I hereby certify under penalty of law that this document and all attachments were prepared under my direction or supervision in accordance with a system designed to assure that qualified personnel properly gathered and evaluated the information submitted. Based on my inquiry of the person or persons who manage the system, or those persons directly responsible for gathering the information, the information submitted is, to the best of my knowledge and belief, true, accurate, and complete. I am aware that there are significant penalties for submitting false information, including the possibility of fine and imprisonment for knowing violations. I also certify that the applicable practices in The Low Risk Site Handbook for Erosion Prevention and Sediment Control will be implemented for the duration of the project for which this NOI is submitted.

Landowner Name: 1)Heather Paine 2) Kathleen Talbert, Presidents Title: Stonehedge North and South Area Assoc.

Signature: [signature] Date: 5-23-14

Principal Operator: TBD Title:
(if known)

Signature: Date:

Application Preparer: DuBois & King, Inc. Attn: Charlotte Brodie Title: Field Naturalist
(if applicable)

Signature: Charlotte N Brodie Date: 4/17/14

[1] "Common Plan of Development" is defined within the CGP 3-9020, Appendix C – Definitions, page A-12
[2] "Waters of the State" (i.e. receiving water) is defined within the CGP 3-9020, Appendix C – Definitions, page A-16

D. Project Information

1. Project Name: Stonehedge Stormwater Improvements

2a. Is this project part of a Common Plan of Development[1]? [✓] Yes [ ] No
2b. If Yes Name of Development: Stonehedge

3a. Does this project have any previously issued or pending stormwater discharge permits? [✓] Yes [ ] No
3b. If Yes, Prior NOI Number(s): 2-0100 (expired)

4. Location Address
a. Street: Stonehedge Drive b. City/Town: South Burlington

c. Latitude: 44 ° 26 ' 10 " d. Longitude: 73 ° 11 ' 53 " e. County: Chittenden

➲ Use DEC's Waterbody Identification (WBID) ArcGIS webpage *(click here)* to answer questions 5 and 6 below

5. Name of receiving water(s)[2]: Potash Brook 6. Include a topographic location map.

7. Project Type: [ ] Residential [ ] Commercial [ ] Industrial [ ] Other: Stormwater Improvements

8. Total Area of Disturbance: 3.2 acres 9. Description of construction activities to be permitted (below):
Five new catch basins (approx. 38 SF each), new 18" HDPE storm drains totaling approximately 581', a new 43' long 2'X3' concrete box culvert, a new 692' long stone-lined ditch, a new stone headwall (approx. 30 SF), new 36" storm drain totaling 632', three new bioretention areas totaling approximately 6,945, 6,300 and 8,305 SF respectively, new 72,000 SF stormwater treatment and detention pond, and a new 300 SF (approx.) pond outlet and control structure.

E. Public Notice Requirement

You must provide a copy of this complete NOI form to the municipal clerk for posting in the municipality in which the project is located. If the project and the related discharge(s) are located in different municipalities, then the completed NOI must be filed with the municipal clerk in each municipality. The municipal clerk must post the completed NOI. In order to be considered complete, you must include the date of posting.

Date of Posting at Municipal Office(s): _____

Information for the Municipal Clerk regarding posting instructions can be found on **Page 4** of this NOI.

F. Certification Relating to the Accuracy of the Information Submitted

I hereby certify under penalty of law that this document and all attachments were prepared under my direction or supervision in accordance with a system designed to assure that qualified personnel properly gathered and evaluated the information submitted. Based on my inquiry of the person or persons who manage the system, or those persons directly responsible for gathering the information, the information submitted is, to the best of my knowledge and belief, true, accurate, and complete. I am aware that there are significant penalties for submitting false information, including the possibility of fine and imprisonment for knowing violations. I also certify that the applicable practices in The Low Risk Site Handbook for Erosion Prevention and Sediment Control will be implemented for the duration of the project for which this NOI is submitted.

Landowner Name: 1)Heather Paine 2) Kathleen Talbert, Presidents Title: Stonehedge North and South Area Assoc.

Signature: Kathleen Talbert Date: 5/22/14

Principal Operator: TBD Title: _____
(if known)

Signature: _____ Date: _____

Application Preparer: DuBois & King, Inc. Attn: Charlotte Brodie Title: Field Naturalist
(if applicable)

Signature: Charlotte A Brodie Date: 9/12/14

[1] Common Plan of Development is defined within the CGP 3-9020 Appendix C - Definitions, page A-12
[2] Waters of the State (i.e. receiving water) is defined within the CGP 3-9020 Appendix C - Definitions, page A-16

For Department Use Only

VERMONT DEPARTMENT OF ENVIRONMENTAL CONSERVATION AUTHORIZATION TO DISCHARGE

A determination has been made that the proposed construction activities qualify for coverage under General Permit 3-9020 (amended 2008) as a Low Risk project. Subject to the conditions of General Permit 3-9020 (amended 2008) the applicant is hereby authorized to discharge stormwater runoff from a construction site as described in this Notice of Intent Number 7220-9020.

Dated this 7th day of July, 20 14

David K. Mears, Commissioner Department of Environmental Conservation

By: Padraic Monks

Padraic Monks, Program Manager
Stormwater Program

PUBLIC COMMENT

Public comments concerning this Notice of Intent to discharge under CGP 3-9020 (amended 2008) are invited and must be submitted within 10 days of receipt of this Notice by the Municipal Clerk. Comments should address how the application complies or does not comply with the terms and conditions of CGP 3-9020 (amended 2008). A letter of interest should be filed by those persons who elect not to file comments but who wish to be notified if the comment period is extended or reopened for any reason. All written comments received within the time frame described above will be considered by the Department of Environmental Conservation in its final ruling to grant or deny authorization to discharge under CGP 3-9020 (amended 2008). Send written comments to:

Vermont Department of Environmental Conservation
Watershed Management Division, Stormwater Program
1 National Life Drive, Main Building Second Floor
Montpelier, VT 05620-3522

Please cite the NOI number in any correspondence.

APPEALS

Renewable Energy Projects – Right to Appeal to Public Service Board
If this decision relates to a renewable energy plant for which a certificate of public good is required under 30 V.S.A. §248, any appeal of this decision must be filed with the Vermont Public Service Board pursuant to 10 V.S.A. §8506. This section does not apply to a facility that is subject to 10 V.S.A. §1004 (dams before the Federal Energy Regulatory Commission), 10 V.S.A. §1006 (certification of hydroelectric projects) or 10 V.S.A. Chapter 43 (dams). Any appeal under this section must be filed with the clerk of the Public Service Board within 30 days of the date of this decision. For further information, see the Public Service Board website at http://psb.vermont.gov or call (802) 828-2358. The address for the Public Service Board is 112 State Street Montpelier, Vermont 05620-2701.

All Other Projects – Right to Appeal to Environmental Court
Pursuant to 10 V.S.A. Chapter 220, any appeal of this decision must be filed with the clerk of the Environmental Court within 30 days of the date of the decision. The Notice of Appeal must specify the parties taking the appeal and the statutory provision under which each party claims party status; must designate the act or decision appealed from; must name the Environmental Court; and must be signed by the appellant or their attorney. In addition, the appeal must give the address or location and description of the property, project or facility with which the appeal is concerned and the name of the applicant or any permit involved in the appeal. The appellant must also serve a copy of the Notice of Appeal in accordance with Rule 5(b)(4)(B) of the Vermont Rules for Environmental Court Proceedings. For further information, see the Vermont Rules for Environmental Court Proceedings, available online at www.vermontjudiciary.org or call (802) 828-1660. The address for the Environmental Court is 2418 Airport Road, Suite 1, Barre, Vermont 05641.

A copy of CGP 3-9020 (amended 2008) may be obtained by calling (802) 828-1535; by visiting the Department at the above address between the hours of 7:45 am and 4:30 pm; or by download from the Watershed Management Division's Web site at: www.vtwaterquality.org.

INFORMATION FOR MUNICIPAL CLERK

10 V.S.A. Chapter 47 §1263(b) provides for the public notice of an applicant's intent to discharge stormwater runoff associated with construction activity. Please post this notice and instruction sheet in a conspicuous place for 10 days from the date received. If you have any questions, contact the Watershed Management Division of the Department of Environmental Conservation at (802) 828-1535.

Submit this form and the $50 fee to:

Vermont Department of Environmental Conservation
Watershed Management Division, Stormwater Program
1 National Life Drive, Main Building Second Floor
Montpelier, VT 05620-3522

Vermont Department of Environmental Conservation
Watershed Management Division
Main Building, Second Floor
One National Life Drive
Montpelier, VT 05620-3522

Agency of Natural Resources

[phone] 802-828-1535

The Notice of Intent for the discharge of stormwater runoff from Low Risk Construction Activity under Construction General Permit (CGP) 3-9020 (Amended 2008) has been authorized**.** Enclosed are four documents that you will need to maintain compliance with this authorization.

1. Authorized Notice of Intent (NOI)
The authorized NOI for Low Risk Projects is valid for two years from the date of the authorization. If the project will proceed past the automatic termination date, you must reapply for coverage under this or another construction stormwater permit before that time.

2. Notice of Authorization for Posting
The notice of Authorization, which details the authorization and conditions you selected in completion of Appendix A to the CGP, must be posted in a location visible to the public in accordance with Subpart 4.5.C of the CGP. In accordance with subpart 5.1 of the CGP, the project risk score must be re-evaluated prior to any major changes to the construction plan.

3. Low Risk Site Handbook for Erosion Prevention and Sediment Control
Please provide the Principal Operator with the low risk site handbook. This handbook details the practices that must be implemented throughout the construction project to prevent erosion and the discharge of sediment from the construction site. Some practices must be in place before construction begins, so please review the entire handbook before starting the project.

4. Notice of Addition of Co-Permittee
This form must be submitted for every new landowner or principal operator who joins the project, in accordance with Subpart 7.2 of the CGP.

The CGP, copies of pertinent forms, and an electronic version of the Low Risk Site Handbook for Erosion Prevention and Sediment Control are available on the stormwater website at: http://www.vtwaterquality.org/stormwater/htm/sw_cgp.htm. If you have any questions related to your authorization, please contact the appropriate analyst in the Stormwater District where your project is located. Use our District Look-up Tool for details.

Sincerely,

Stormwater Management Program

Cc: Co-Permittee/Application Preparer/Designer (if applicable)

Notice of Authorization

Under Vermont Construction General Permit 3-9020
For **Low Risk Projects**

VERMONT
ENVIRONMENTAL CONSERVATION

Project Name: Stonehedge Stormwater Improvements	**Notice of Intent Number: 7220-9020**
	Date of Authorization: July 7, 2014
Permittee Name: Stonehedge North Area Association and Stonehedge South Area Association	**Date of Expiration: July 7, 2016**

The project listed above has received authorization under General Permit 3-9020 to discharge stormwater from the following construction activities: Five catch basins, new 18" HDPE storm drains totaling approx. 581', a new 43' long 2' by 3' concrete box culvert, new stoned lined ditch, a new stone headwall, new storm drain, 3 new bioretention areas, stormwater treatment and detention pond, pond outlet and control structure.

This authorization includes the following requirements:

1. Implementation of erosion prevention and sediment control practices required by the Low Risk Site Handbook for Erosion Prevention and Sediment Control.

2. All areas of disturbance must have temporary or final stabilization within **7 days** of the initial disturbance. After this time, all disturbed soil must be stabilized at the end of each work day. Between October 15 and April 15 all disturbed soil must be stabilized at the end of each work day. The following exceptions apply:
    a. Stabilization is not required if work is to continue in the area within the next 24 hours and there is no precipitation forecast for the next 24 hours.
    b. Stabilization is not required if the work is occurring in a self-contained excavation (i.e. no outlet) with a depth of 2 feet or greater (e.g. house foundation excavation, utility trenches).

3. No more than **2 acres** of land may be disturbed at any one time.

4. Inspections shall be conducted at least once every (7) calendar days and within twenty-four (24) hours of the end of a storm event resulting in discharge of Stormwater from construction site.

5. If there is a discharge of visibly discolored stormwater from the construction site or from the construction site to waters of the State, the permittee shall take immediate corrective action.

6. If, after completing corrective action, there continues to be a discharge of sediment from the construction site to waters of the State, the permittee shall notify DEC by submitting a report within 72 hours of the discharge.

To request information on this authorization, or to report compliance concerns, please contact:

Vermont DEC, Watershed Management Division
Main Building, Second Floor
One National Life Drive
Montpelier, VT 05620-3522
(802) 828-1535

[See next page for posting requirements]

Notice of Addition
Of Owners or Operators To Coverage
Under Vermont Construction General Permit 3-9020

VERMONT
ENVIRONMENTAL CONSERVATION

Submission of this completed form constitutes notice that the entity in Section C seeks to be added as a co-permittee to an existing authorization to discharge under Vermont's Stormwater Construction General Permit (CGP) from the project identified in Section A. All landowners and persons who meet the definition of Principal Operator (Subparts 2.1B, 3.1B of the CGP) and who were not included on the original NOI must submit a Notice of Addition form.

A. Project Information
1. Project Name:_____ 2. Notice of Intent Number: _____

B. Original Permittee Information
1.Name: _____

2. Mailing Address:
a. Street/PO Box: _____

b. City/Town: _____ c. State: _____ d. Zip:_____
3. Contact Information

a. Phone: _____ b. Fax: _____ c. Email: _____

C. New Co-Permittee Information
Check one or both: ☐ New Landowner ☐ New Principal Operator

1.Name: _____

2. Business Name: _____
3. Mailing Address:
a. Street/PO Box: _____

b. City/Town: _____ c. State: _____ d. Zip:_____
4. Contact Information

a. Phone: _____ b. Fax:_____ c. Email: _____

D. Request for Addition as Co-Permittee
I hereby request that the entity in Section C be added as co-permittee to the existing authorization to discharge stormwater from construction activities stated in Section A. In requesting co-permittee status, I hereby certify under the penalty of law that I have read, understand, and meet the eligibility conditions of the CGP; that I agree to comply with all applicable terms and conditions of the CGP; that I understand that continued authorization under the CGP is contingent on maintaining eligibility for coverage, and that the applicable practices in the authorized Erosion Prevention and Sediment Control Plan must be implemented and maintained for the duration of the construction activities. I agree to comply with all applicable terms and conditions of the General Permit 3-9020.

Signature: _____ Date: _____

Submit <u>Original</u> Form to:
VT DEC, Watershed Management Division
1 National Life Drive, Main 2
Montpelier, VT, 05620-3522

Permittee Directions for Posting:
This notice shall be placed near the construction entrance at a location visible to the public. If displaying near the main entrance is infeasible, the notice shall be posted in a local public building such as the town hall or public library. For linear projects, the notice shall be posted at a publicly accessible location near the active part of the construction project (e.g., where a pipeline project crosses a public road).

February 17, 2015
120808L1A

Ms. Laura LaPierre and Ms. Julie Foley
VT DEC Watershed Management Division
1 National Life Drive, Main 2
Montpelier, VT 05620-3522

Subject: Stonehedge Stormwater Improvements, City of South Burlington; Wetland Mitigation Plan

Dear Laura and Julie,

Introduction

In response to our recent conversations about this project and Laura's January 8, 2015 email on the subject, we have reduced the impacts to Class II wetland buffer at the north end of the stormwater pond, and have developed a wetland mitigation plan.

Impacts reduction

Regarding reduction of impacts, we have moved the temporary stone check dam northwards to the edge of the bike path, as shown on the attached Overall Site Plan, Sheet C-102 and the Wetland Impacts Plan. We have also pulled the grading back just north of the outlet control structure, and have added Project Demarcation Fence along that new contour. The result of these actions is the elimination of approximately 2,621 SF of temporary buffer impact which would have involved cutting of forest.

We have recalculated all impacts following these changes and using an improved measurement tool. The results of these changes are shown in the totals of the various impact categories on the Wetland Impacts Plan, and have resulted in reductions to all categories of impacts.

Wetland Mitigation Plan

In accordance with our meeting with you on December 15, 2014, we have investigated the potential to restore the degraded, giant reed-dominated wetland to the southeast of the project. We have also sought additional remediation opportunities in the immediate vicinity of the project.

I GPS'd the boundaries of the giant reed infestation on the Stonehedge South Association land. I also GPS'd the infestation on the adjacent City land, should that be determined to be available for mitigation. I overlaid those boundaries onto an orthophoto (see attached Wetland Mitigation Orthophoto). The "Winter GPS Line" boundary reflects areas of observed un-mowed giant reed which were observable even with snow cover. The orthophoto was taken during leaf-off/snowless conditions and shows additional areas likely to be infested with giant reed (currently mowed), and therefore also potential candidates for mitigation.

The area of potential mitigation on the Stonehedge South Association land is 24,150 SF. The area of potential mitigation on the City of South Burlington land is 13,067 SF. Tom DiPietro of the City of South Burlington has approved the use of the 13,067 SF of City land as shown for eradication of giant reed and planting of wetland species for mitigation. Thus, the total area of mitigation proposed is 37,217 SF.

Attached is a Wetland Mitigation Site Plan. Giant reed is to be treated by a licensed herbicide applicator on the entire 37,217 SF area, and a follow-up treatment is to occur one year later. Initial treatment is to occur in late August of Year 1. Wetland mitigation plantings may occur early that fall, or may occur early in the fall of Year 2, after the follow-up giant reed treatment, if project timing allows.

We have specified the planting of attractive native wetland trees (5' height) and shrubs (3' height) along the boundaries of the mitigation site, which are the areas in the immediate viewshed of the condominium dwellers and the users of the City park. No trees are to be planted within a 10' corridor along the existing sewer lines, but shrubs will be planted there to discourage pedestrian traffic into condominium dwellers' yards.

The entire site is to be seeded with a Wet Meadow and Detention Basin seed mix, as offered by Vermont Wetland Plant Supply, or an equivalent to be approved in writing by myself. The seed mix includes a variety of native grasses, forbs and flowering herbs, intended to provide erosion control and turf to discourage invasive species establishment and to provide a diversity of herbaceous wetland species (see attached list of species).

The area outside of the specified tree and shrub clusters (shown in hatching on the plan) is to be planted with tubelings of red osier dogwood, shrub willow and silky dogwood at a rate of 400 stems per acre. This rate is at the upper end of recommendations for a planting rate, as recommended to compensate for the lower expected viability of tubelings as opposed to balled and burlaped or container-grown plants. The planting of tubelings is intended to create a dense shrub wetland which should be efficacious in suppressing invasive species, which would improve the functions and values of the wetland, and which will not create an impracticable financial burden on the City.

Conclusion

We believe we have accomplished the goals of reducing impacts to the Class II wetland and developing a workable and beneficial wetland mitigation site plan to help compensate for the necessary impacts to the wetland and its buffer. We hope that you will approve of these measures and grant the Wetlands Permit for the project. Expeditious receipt of the permit will be critical to the City's ability to maintain its funding for the project.

Thank you very much for your cooperation on this project. Please do not hesitate to contact me at 878-7661, or by email at cbrodie@dubois-king.com, if you have any questions or comments regarding this letter.

Very truly yours,

Charlotte Brodie

Charlotte Brodie
Field Naturalist

I:\120808L1A Stonehedge\Mitigation\Mitigation Plan Letter.docx

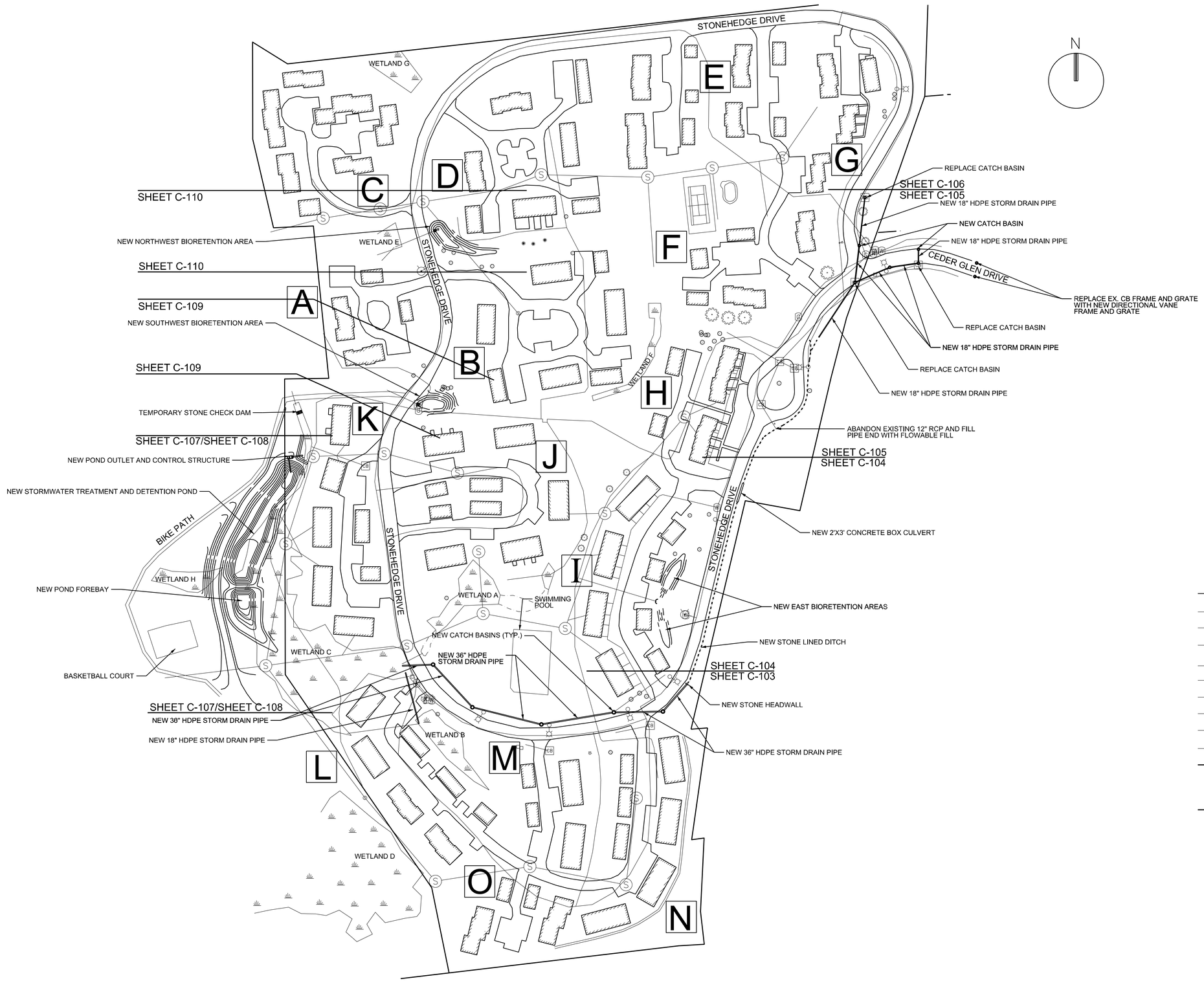

LEGEND (EXISTING)

- WETLANDS
- 6" APPLE / 20" PINE — TREES
- LIGHT POLE
- SEWER MANHOLE
- CATCH BASIN
- WATER SHUT OFF
- GAS SHUT OFF
- ELECTRICAL BOX
- HORIZONTAL VERTICAL CONTROL
- EDGE OF PAVEMENT
- SEWER MAIN
- STORM DRAIN
- WATER MAIN
- UNDERGROUND COMMUNICATIONS
- OVERHEAD ELECTRICAL
- BURIED ELECTRICAL
- UNDERGROUND NATURAL GAS
- FENCE
- WETLAND BOUNDARY
- PROPERTY LINE

LEGEND (NEW)

- LIMITS OF DISTURBANCE

OVERALL SITE PLAN

100' 50' 0 100'

SCALE: 1"= 100'-0"

US Army Corps of Engineers New York District

MARK	DESCRIPTION	DATE	APPR.	MARK	DESCRIPTION	DATE	APPR.

DATE: JUNE 2014
SOLICITATION NO.:
CONTRACT NO.:

DESIGNED BY: HLV
DWN BY: ZDC
CKD BY: MTM
SUBMITTED BY: D & K
FILE NAME: ...\dgn\120808C_SP-C102.dgn
SIZE: ANSI D
PLOT SCALE: 1:1
PLOT BY: DUBOIS & KING
PLOT DATE: 2/10/2015

U. S. ARMY ENGINEER DISTRICT
NEW YORK
http://www.nan.usace.army.mil

DuBois & King inc.

STONEHEDGE
STORMWATER IMPROVEMENTS
SOUTH BURLINGTON, VERMONT

OVERALL SITE PLAN

SHEET REFERENCE NUMBER
C-102
SHEET 04 OF 22

MAY 2010 NYD A/E BORDER

Submitted by: DUBOIS & KING
...\dgn\120808C_SP-C102.dgn
Plot Date: 2/10/2015 8:10:08 AM

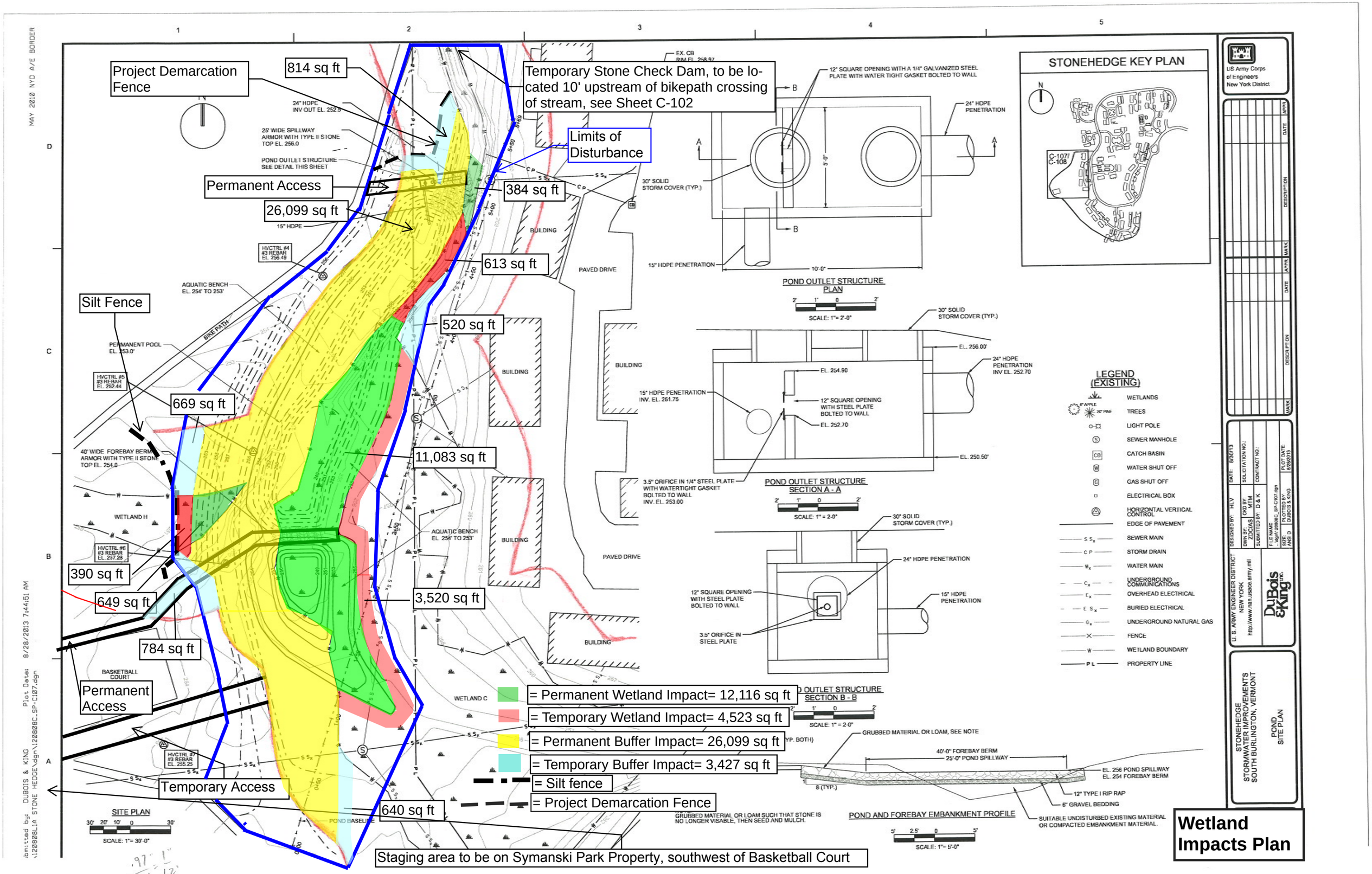
Project Demarcation Fence
814 sq ft
Temporary Stone Check Dam, to be located 10' upstream of bikepath crossing of stream, see Sheet C-102
Limits of Disturbance
Permanent Access
384 sq ft
26,099 sq ft
613 sq ft
Silt Fence
520 sq ft
669 sq ft
11,083 sq ft
390 sq ft
649 sq ft
3,520 sq ft
784 sq ft
Permanent Access
Temporary Access
640 sq ft
Staging area to be on Symanski Park Property, southwest of Basketball Court
= Permanent Wetland Impact= 12,116 sq ft
= Temporary Wetland Impact= 4,523 sq ft
= Permanent Buffer Impact= 26,099 sq ft
= Temporary Buffer Impact= 3,427 sq ft
= Silt fence
= Project Demarcation Fence
SITE PLAN
SCALE: 1"= 30'-0"
POND OUTLET STRUCTURE PLAN
SCALE: 1"= 2'-0"
POND OUTLET STRUCTURE SECTION A - A
SCALE: 1"= 2-0"
POND OUTLET STRUCTURE SECTION B - B
SCALE: 1"= 2-0"
POND AND FOREBAY EMBANKMENT PROFILE
SCALE: 1"= 5'-0"
STONEHEDGE KEY PLAN
LEGEND (EXISTING)
WETLANDS
TREES
LIGHT POLE
SEWER MANHOLE
CATCH BASIN
WATER SHUT OFF
GAS SHUT OFF
ELECTRICAL BOX
HORIZONTAL VERTICAL CONTROL
EDGE OF PAVEMENT
SEWER MAIN
STORM DRAIN
WATER MAIN
UNDERGROUND COMMUNICATIONS
OVERHEAD ELECTRICAL
BURIED ELECTRICAL
UNDERGROUND NATURAL GAS
FENCE
WETLAND BOUNDARY
PROPERTY LINE
US Army Corps of Engineers New York District
U.S. ARMY ENGINEER DISTRICT NEW YORK
http://www.nan.usace.army.mil
DuBois & King
STONEHEDGE STORMWATER IMPROVEMENTS SOUTH BURLINGTON, VERMONT
POND SITE PLAN
Wetland Impacts Plan

DuBois & King inc.

ENGINEERING • PLANNING •
MANAGEMENT • DEVELOPMENT
6 GREEN TREE DRIVE
SO. BURLINGTON, VT 05403
TEL: (802) 878-7661
FAX: (866) 783-7101
www.dubois-king.com
RANDOLPH, VT
SPRINGFIELD, VT
BEDFORD, NH

© Copyright 2015 Dubois & King Inc.

PROFESSIONAL SEAL

NOT FOR CONSTRUCTION PRELIMINARY PLANS

NO.	DATE	DESCRIPTION	BY	CK'D

CITY OF SOUTH BURLINGTON

STONEHEDGE STORMWATER IMPROVEMENTS

SOUTH BURLINGTON, VT 05403

SHEET TITLE

Wetland Mitigation Orthophoto

DRAWN BY JWP	DATE FEB. 2015
CHECKED BY CWB	D&K PROJECT # 120808L1A
PROJ. ENG. CWB	D&K ARCHIVE #

SHEET NUMBER

C-1

N/F
CITY OF SOUTH
BURLINGTON

N/F
STONEHEDGE SOUTH
ASSOCIATION

ADDITIONAL PROPOSED
MITIGATION AREA

25 IVC,
5' O.C.

3 AB

3 AB

14 VCS,
5' O.C.

25 IVC,
5' O.C.

STONEHEDGE DRIVE

14 CSI,
5' O.C.

NO TREE OR SHRUB PLANTINGS
IN 10' SEWER LINE CORRIDORS

21 VOP,
5' O.C.

ADDITIONAL PROPOSED
MITIGATION AREA

ADDITIONAL PROPOSED
MITIGATION AREA

5 AB, 10' O.C.

24 VOP,
5' O.C.

8 AB, 10' O.C.

14 VCS,
5' O.C.

WINTER
GPS LINE

6 PM, 10' O.C.

Trees
AB = Abies balsamea, balsam fir
PM = Picea mariana, black spruce

Shrubs
CSI = Cornus sericea, red-osier dogwood
IVC = Ilex verticillata, winterberry
VCS = Viburnum cassinoides, wild raisin
VOP = Viburnum opulus, highbush cranberry

Seed mix (entire mitigation site)
Wet Meadow & Detention Basin, VT Wetland
Plant Supply, or equivalent

= Red osier dogwood, shrub willow & silky dogwood tubelings in equal numbers, planted at 400 stems/acre.

GRAPHIC SCALE
15 0 7.5 15 30 60
(IN FEET)
1 inch = 15 ft. AT 24X36
HALF SIZE AT 11X17

DuBois & King inc.
ENGINEERING • PLANNING •
MANAGEMENT • DEVELOPMENT
6 GREEN TREE DRIVE
SO. BURLINGTON, VT 05403
TEL: (802) 878-7661
FAX: (866) 783-7101
www.dubois-king.com
RANDOLPH, VT
SPRINGFIELD, VT
BEDFORD, NH

© Copyright 2015 Dubois & King Inc.

PROFESSIONAL SEAL

NOT FOR CONSTRUCTION PRELIMINARY PLANS

NO.	DATE	DESCRIPTION	BY	CK'D

CITY OF SOUTH BURLINGTON

STONEHEDGE STORMWATER IMPROVEMENTS

SOUTH BURLINGTON, VT 05403

SHEET TITLE

WETLAND MITIGATION SITE

DRAWN BY	DATE
JWP	FEB. 2015
CHECKED BY	D&K PROJECT #
CWB	120808L1A
PROJ. ENG.	D&K ARCHIVE #
CWB	

SHEET NUMBER

C-1

Wet Meadow and Detention Basin Seed Mix
List of Species

Panicum virgatum

Elymus virginicus

Festuca rubra

Carex vulpinoidea

Carex scoparia

Scirpus atrovirens

Bidens cernua

Eupatorium perfoliatum

Eupatoriadelphus maculatus

Juncus effuses

Onoclea sensibilis

Verbena hastata

Symphyotrichum novae-angliae

Appendix D

Draft Finding of No Significant Impact

Finding of No Significant Impact
Environmental Assessment for Bartlett Brook Stormwater Management
South Burlington, Chittenden County, Vermont

The U.S. Army Corps of Engineers (Corps), New York District (District), in partnership with the City of South Burlington, is proposing to implement multiple stormwater management measures in the Laurel Hill and Stonehedge neighborhoods of South Burlington, Chittenden County, Vermont.

The proposed project is situated within the Potash and Bartlett Brook watersheds. Both the Potash and Bartlett Brooks are tributaries to Lake Champlain and have been listed on the Vermont 303(d) list of impaired waters since 2004 and 2006, respectively, due to impacts from unmanaged stormwater runoff. The purpose of the project is to improve water quality through the removal of pollutants and the reduction of peak flows that cause channel erosion, which is associated with significant sediment and phosphorous loads.

In addition, both neighborhoods experience regular flooding and drainage issues related to uncontrolled stormwater runoff. Therefore, a secondary benefit associated with the proposed project will be a reduction in nuisance flooding associated with stormwater runoff.

The proposed project has been authorized under Section 542 of the Water Resources Development Act of 2000 (WRDA). Section 542 of WRDA 2000 authorizes the Secretary of the Army to establish a program for providing environmental assistance to non-Federal interests in the Lake Champlain Watershed. It defines the Lake Champlain Watershed as the land areas within Addison, Bennington, Caledonia, Chittenden, Franklin, Grand Isle, Lamoille, Orange, Orleans, Rutland, and Washington Counties in the State of Vermont; the land areas that drain into Lake Champlain and that are located within Essex, Clinton, Franklin, Warren, and Washington Counties in the State of New York; and the near-shore areas of Lake Champlain within the counties referred to in New York.

The District has completed an Environmental Assessment (EA) according to the requirements of the National Environmental Policy Act (NEPA) in order to evaluate the potential impacts to environmental, cultural and socio-economic resources associated with the proposed action. No significant impacts to the environment are anticipated. My determination of a FONSI is based on the Environmental Assessment and the following considerations:

- The project will not negatively impact the quality of the human environment. Vegetative screens will be installed around the proposed retention basin in the Stonehedge neighborhood to maintain the viewscape.
- Employing standard erosion control techniques during bridge removal will minimize excess sedimentation to the Potash Brook and a Bartlett Brook tributary.
- The enhancement of 0.85 acres of on-site wetlands through invasive species management and replanting with native wetland herbaceous, shrub and tree species to compensate for 0.27 acres of unavoidable wetland impacts resulting from the implementation of the retention pond.
- No known archaeological or historical resources will be affected by this project.

- The project will not adversely impact air quality.
- A tree clearing restriction from 1 April through 30 September will be implemented during construction to avoid potential adverse impacts to northern long-eared bat (*Myotis septentrionalis*) and Indiana bat (*Myotis sodalis*).

Based on my review and evaluation of the environmental, cultural resource and socio-economic effects as presented in the Environmental Assessment, I have determined that the proposed project is not a major Federal action significantly affecting the quality of the human environment. I have reviewed the proposed action in terms of overall public interest and have found the proposed action does not warrant the preparation of an environmental impact statement.

_____ _____

Date

David A. Caldwell
Colonel, U.S. Army
Commander