854,000 856,000 858,000 860,000

646,000

648,000

650,000

GRID NORTH

CHANNEL COORDINATES (NAD 83)

STATION NAME	NORTHING (Y)	EASTING (X)
A	855905.2098	647898.6195
F	856085.7500	648469.5600
B	863344.9400	644484.3700
E	863552.5700	645043.4900
C	870066.0200	642267.1100
D	870150.5600	642888.2900

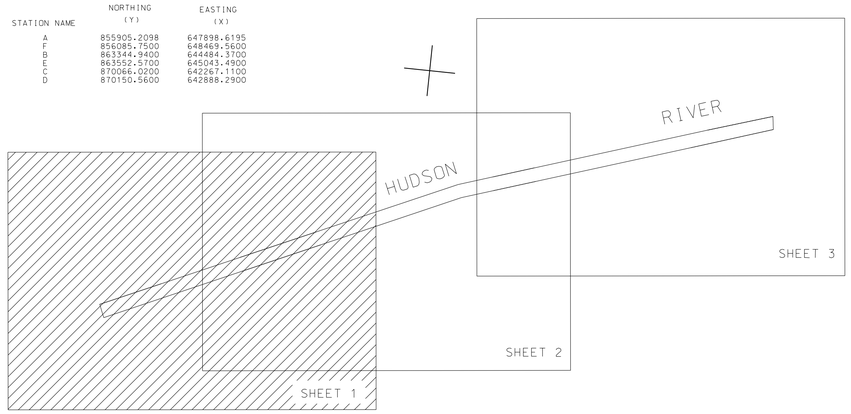

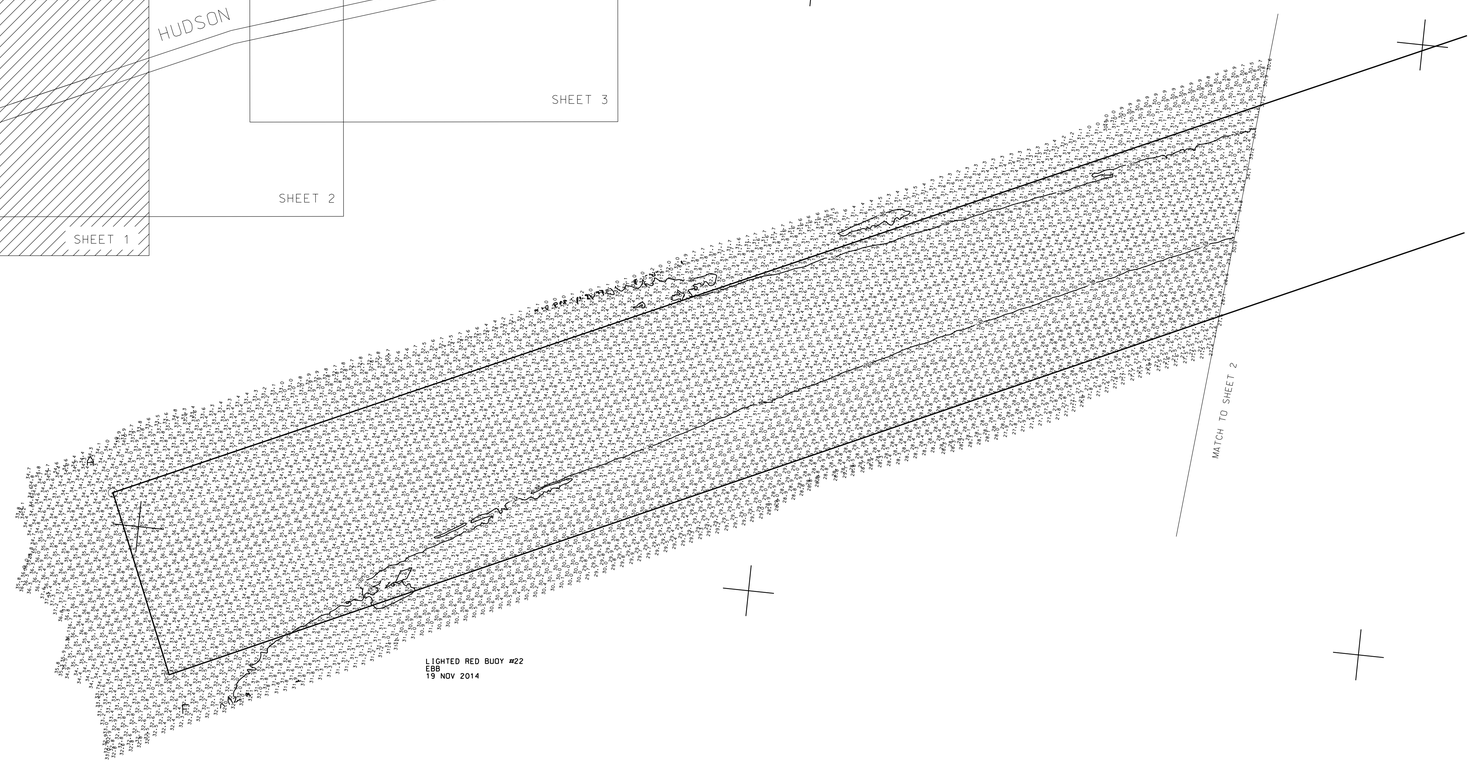

LOCAL CONTROL DATA
BENCHMARK: HAVERSTRAW TBM
ELEVATION: 6.92 (NAVD) 1988

NSRS BENCHMARK
BENCHMARK: 851 8924 C (LX1849)
ELEVATION: 6.70 (NAVD) 1988

NOTE:

THE INFORMATION DEPICTED ON THIS MAP REPRESENTS THE RESULTS OF SURVEYS MADE ON THE DATES INDICATED AND CAN ONLY BE CONSIDERED THE GENERAL CONDITIONS EXISTING AT THAT TIME.

COORDINATES REFER TO THE NEW YORK EAST SYSTEM (NAD 1983)

SOUNDINGS REFER TO THE PLANE OF MEAN LOWER LOW WATER

THE M.L.L.W. IS 1.7' BELOW NAVD 1988

M.L.L.W. WAS DETERMINED USING VDATUM

THIS MAP IS NOT CEPD COMPLIANT

THE SOUNDING DATA DEPICTED ON THIS MAP WAS COLLECTED USING PROJECT CLASSIFICATION-GENERAL, AS DEPICTED IN EM 1110-2-1003

THE DATA ON THIS MAP IS REPRESENTATIVE OF A LARGER DATA SET.

"THE PLANIMETRICS SHOWN ON THIS MAP ARE FOR ORIENTATION PURPOSES ONLY."

THIS SURVEY WAS PERFORMED USING RTK GPS FROM THE NEW YORK STATE D.O.T. (NYDOT).

US ARMY CORPS OF ENGINEERS NEW YORK DISTRICT

ROGERS SURVEYING PLLC
1023 Bedford Place
Staten Island, N.Y. 10314
(718) 761-0100
www.rogerssurveying.net

646,000

DATES OF SURVEY:
NOV 18-19 2014

FILE NO.: 226
REQUEST NO.: 4228

SCALE:
ONE INCH = 200 FEET

FIELD BOOKS:
1013 & 1046

APPROVED: D. ROGERS
PLS (CORPORATE/STATE SURVEYOR)

APPROVED: REGINALD SMITH
PROJECT MANAGER

APPROVED: D. CLARKE
CHIEF, SURVEY SECTION

APPROVED: J. MRAZ
BRANCH CHIEF OF SURVEY

DATE: NOV-21-2014

648,000

DEPARTMENT OF THE ARMY
NEW YORK DISTRICT
CORPS OF ENGINEERS
NEW YORK, NEW YORK 10278

OPERATIONS DIVISION
SURVEY SECTION
CENAN-OP-S

HAVERSTRAW BAY
NEW YORK
STATUS SURVEY

VH-101

SHEET 1 OF 3

CORPS OF ENGINEERS

U. S. ARMY

CHANNEL COORDINATES (NAD 83)

STATION NAME	NORTHING (Y)	EASTING (X)
A	855905.2098	647898.6195
F	856085.7500	648469.5600
B	863344.9400	644484.3700
E	863552.5700	645043.4900
C	870066.0200	642267.1100
D	870150.5600	642888.2900

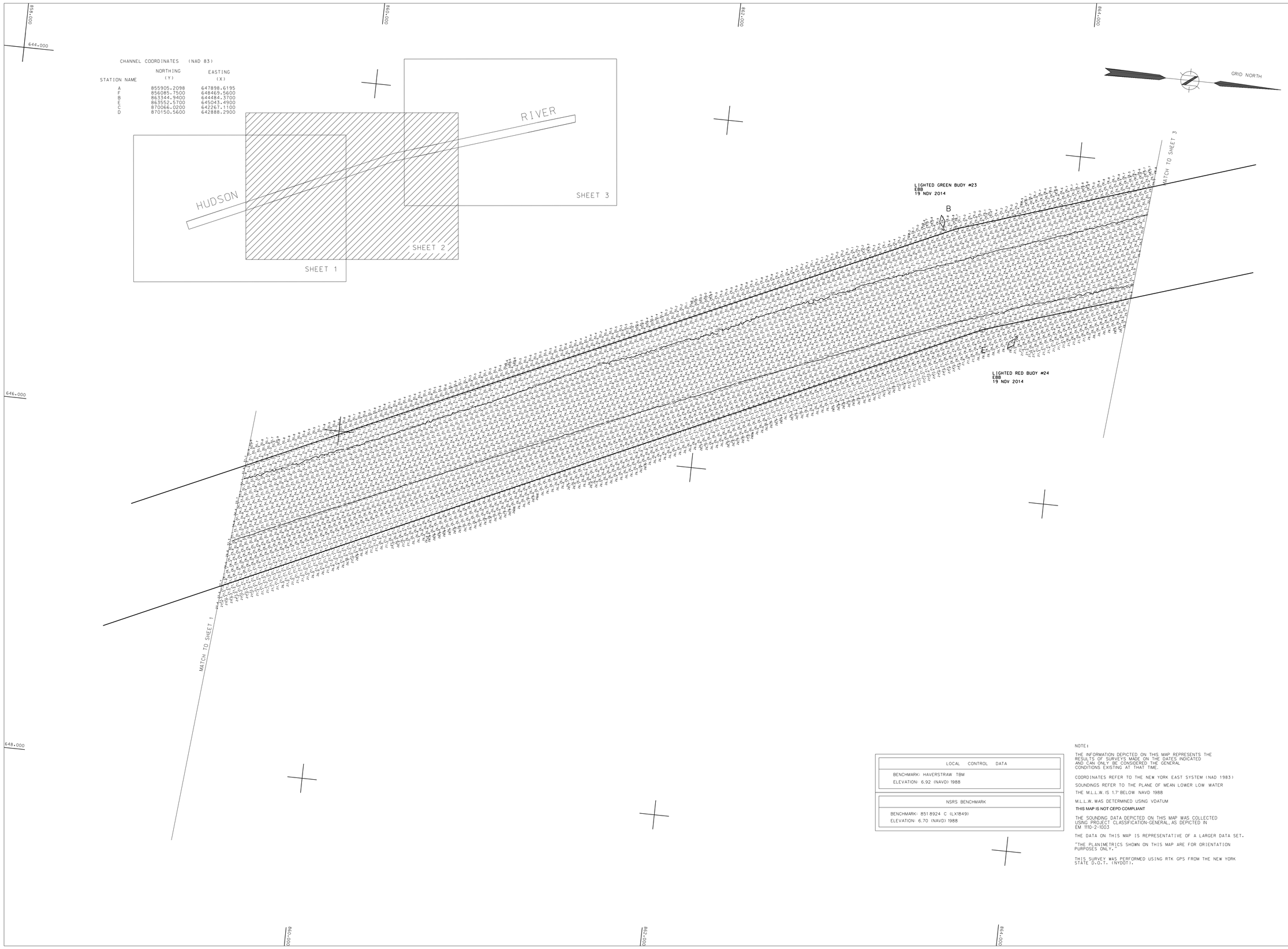

LOCAL CONTROL DATA
BENCHMARK: HAVERSTRAW TBM ELEVATION: 6.92 (NAVD) 1988

NSRS BENCHMARK
BENCHMARK: 851 8924 C (LX1849) ELEVATION: 6.70 (NAVD) 1988

NOTE:

THE INFORMATION DEPICTED ON THIS MAP REPRESENTS THE RESULTS OF SURVEYS MADE ON THE DATES INDICATED AND CAN ONLY BE CONSIDERED THE GENERAL CONDITIONS EXISTING AT THAT TIME.

COORDINATES REFER TO THE NEW YORK EAST SYSTEM (NAD 1983)

SOUNDINGS REFER TO THE PLANE OF MEAN LOWER LOW WATER

THE M.L.L.W. IS 1.7' BELOW NAVD 1988

M.L.L.W. WAS DETERMINED USING VDATUM

THIS MAP IS NOT CEPD COMPLIANT

THE SOUNDING DATA DEPICTED ON THIS MAP WAS COLLECTED USING PROJECT CLASSIFICATION-GENERAL, AS DEPICTED IN EM 1110-2-1003

THE DATA ON THIS MAP IS REPRESENTATIVE OF A LARGER DATA SET.

"THE PLANIMETRICS SHOWN ON THIS MAP ARE FOR ORIENTATION PURPOSES ONLY."

THIS SURVEY WAS PERFORMED USING RTK GPS FROM THE NEW YORK STATE D.O.T. (NYDOT).

US ARMY CORPS OF ENGINEERS NEW YORK DISTRICT

ROGERS SURVEYING, PLLC
1633 Richmond Avenue
Staten Island, N.Y. 10314
(718) 761-7100
www.rogerssurveying.net

DATES OF SURVEY: NOV 18-19 2014

FILE NO.: 226
REQUEST NO.: 4228

SCALE: ONE INCH = 200 FEET

FIELD BOOKS: 1013 / 47-48

APPROVED: D. ROGERS
PLS (signature/CT/FDAT Seal)

APPROVED: REGINALD SMITH
PROJECT MANAGER

APPROVED: D. CLARKE
CHIEF, SURVEY SECTION (signature)

APPROVED: J. MRAZ
SURVEY CHIEF OF SURVEY

DATE: NOV-21-2014

DEPARTMENT OF THE ARMY
NEW YORK DISTRICT
CORPS OF ENGINEERS
NEW YORK, NEW YORK 10278

OPERATIONS DIVISION
SURVEY SECTION
CENAN-OP-S

HAVERSTRAW BAY
NEW YORK
STATUS SURVEY

VH-102

SHEET 2 OF 3

FILE NO : 226
REQ NO : 4228

CORPS OF ENGINEERS

U. S. ARMY

CHANNEL COORDINATES (NAD 83)

STATION NAME	NORTHING (Y)	EASTING (X)
A	855905.2098	647898.6195
F	856085.7500	648469.5600
B	863344.9400	644484.3700
E	863552.5700	645043.4900
C	870066.0200	642267.1100
D	870150.5600	642888.2900

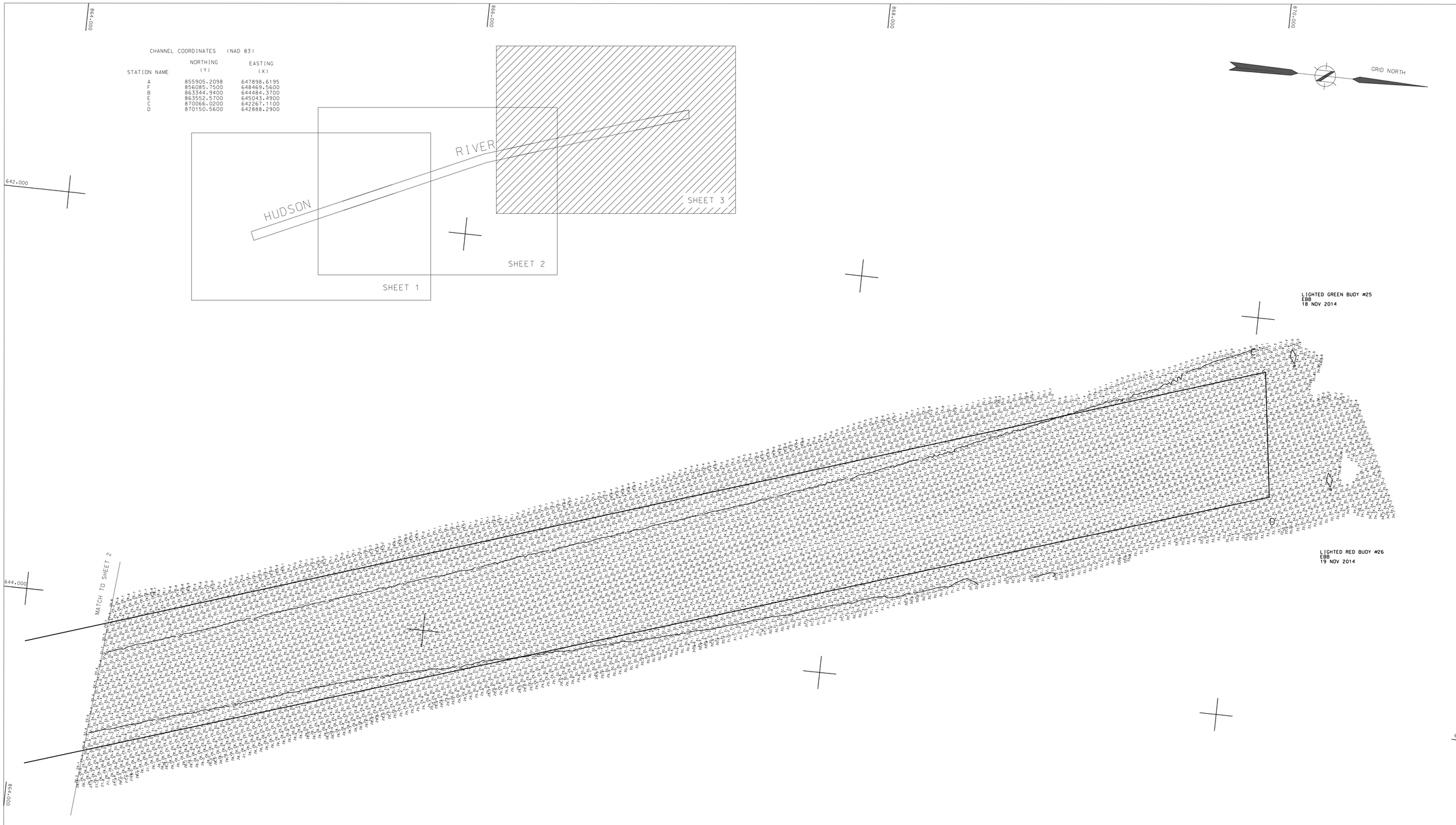

LOCAL CONTROL DATA
BENCHMARK: HAVERSTRAW TBM
ELEVATION: 6.92 (NAVD) 1988

NSRS BENCHMARK
BENCHMARK: BS1892 4 C (LX1849)
ELEVATION: 6.70 (NAVD) 1988

NOTE:

THE INFORMATION DEPICTED ON THIS MAP REPRESENTS THE RESULTS OF SURVEYS MADE ON THE DATES INDICATED AND CAN ONLY BE CONSIDERED THE GENERAL CONDITIONS EXISTING AT THAT TIME.

COORDINATES REFER TO THE NEW YORK EAST SYSTEM (NAD 1983)

SOUNDINGS REFER TO THE PLANE OF MEAN LOWER LOW WATER

THE M.L.L.W. IS 1.7' BELOW NAVD 1988

M.L.L.W. WAS DETERMINED USING VDATUM

THIS MAP IS NOT CEPD COMPLIANT

THE SOUNDING DATA DEPICTED ON THIS MAP WAS COLLECTED USING PROJECT CLASSIFICATION-GENERAL, AS DEPICTED IN EM 1110-2-1003

THE DATA ON THIS MAP IS REPRESENTATIVE OF A LARGER DATA SET.

"THE PLANIMETRICS SHOWN ON THIS MAP ARE FOR ORIENTATION PURPOSES ONLY."

THIS SURVEY WAS PERFORMED USING RTK GPS FROM THE NEW YORK STATE D.O.T. (NYDOT)

US ARMY CORPS OF ENGINEERS NEW YORK DISTRICT

ROGERS SURVEYING PLLC
A Land Surveying Firm
Saint Helena, N.Y. 10510
(845) 831-0000
www.rogerssurveying.net

DATES OF SURVEY: NOV 18-19 2014

FILE NO.: 226
REQUEST NO.: 4228

SCALE: ONE INCH = 200 FEET

FIELD BOOKS: 1013

APPROVED: D. ROGERS
PLS (SURVEYOR/ENGINEER) SURVEYOR

APPROVED: REGINALD SMITH
PROJECT MANAGER

APPROVED: D. CLARKE
CHIEF, SURVEY SECTION

APPROVED: J. MRAZ
CHIEF, OPERATIONS DIVISION

DATE: NOV-21-2014

DEPARTMENT OF THE ARMY
NEW YORK DISTRICT
CORPS OF ENGINEERS
NEW YORK, NEW YORK 10278

OPERATIONS DIVISION
SURVEY SECTION
CENAN-OP-S

HAVERSTRAW BAY
NEW YORK
STATUS SURVEY

VH-103

SHEET 3 OF 3

FILE NO : 226
REQ NO : 4228