Attachment 5 - Typical Drawing Underwater Cable Installation

NAN-2009-01089-EYA
ATTACHMENT 5

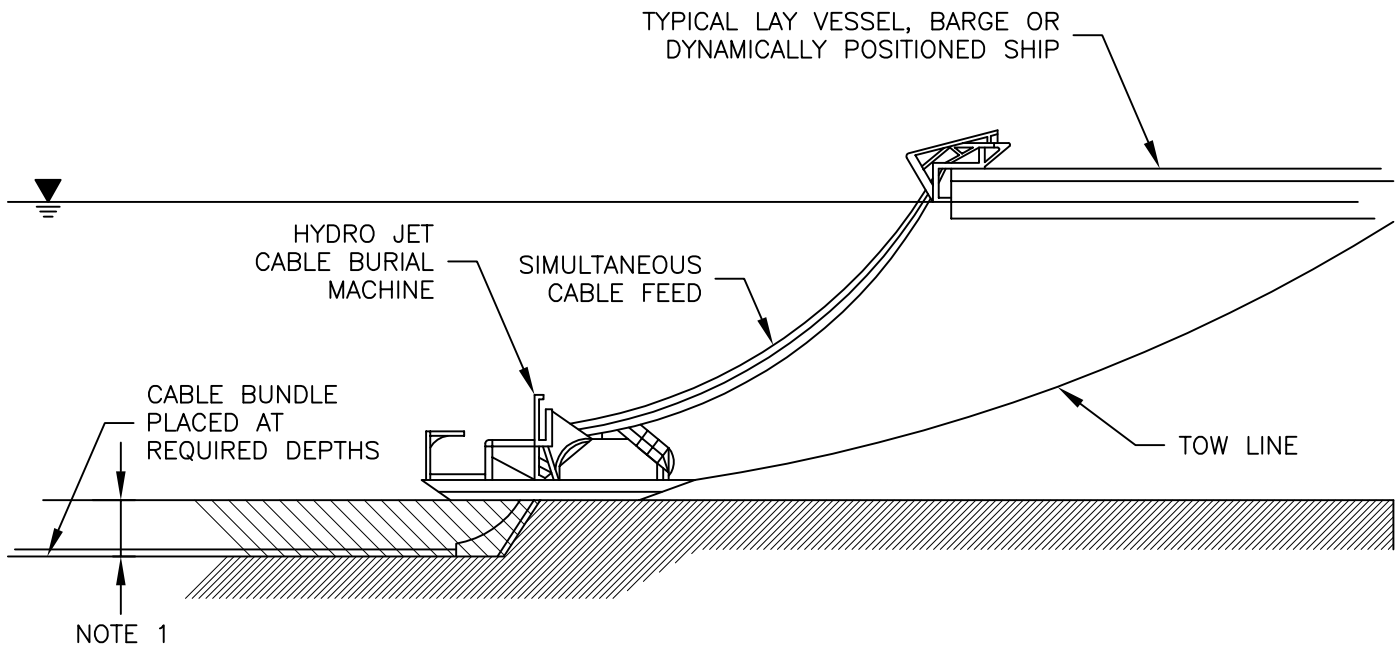

NOTES:

1. BURIAL DEPTH SHALL BE 15'–0" MIN. WITHIN MAINTAINED NAVIGATION CHANNELS. BURIAL DEPTH IS EXPECTED TO BE 6'–0" IN THE HUDSON, HARLEM AND EAST RIVERS, AND NOT LESS THAN 3'–0" WHEN THE CABLES ARE BURIED IN LAKE CHAMPLAIN.

2. HYDROPLOW IS TYPICAL OF EQUIPMENT THAT MAY BE EMPLOYED. ACTUAL EQUIPMENT WILL BE DETERMINED BY THE EPC CONTRACTOR.

3. HYDROJET SHOWN, SHEAR PLOW OPERATION SIMILAR.

4. HYDROPLOW MAY BE OPERATED WITH OR WITHOUT HYDROJET OPERATION (OPERATING AS A SHEAR PLOW) DEPENDING ON BOTTOM SEDIMENT CONDITIONS.

Designed	A WIRONEN
Drawn	JRP/TRC
Checked	.
Approved	.
Scale	NONE

No.	Revision	Date	By	Ck	PE	PE #
0	ISSUED FOR PERMIT	12/06/10	TRC	TRC	.	.
1	ART. VII SUBMISSION	2/3/12	TRC	TRC	.	.
2	ISSUED FOR PERMIT	02/20/12	TRC	TRC	.	.

Transmission Developers Inc.

Champlain Hudson Power Express Project

Champlain Hudson Power Express Inc.

HYDRO PLOW OR JET PLOW

176764-SM-01

Prepared by: HDR DTA & TRC 12/06/2010

NAN-2009-01089-EYA
ATTACHMENT 5

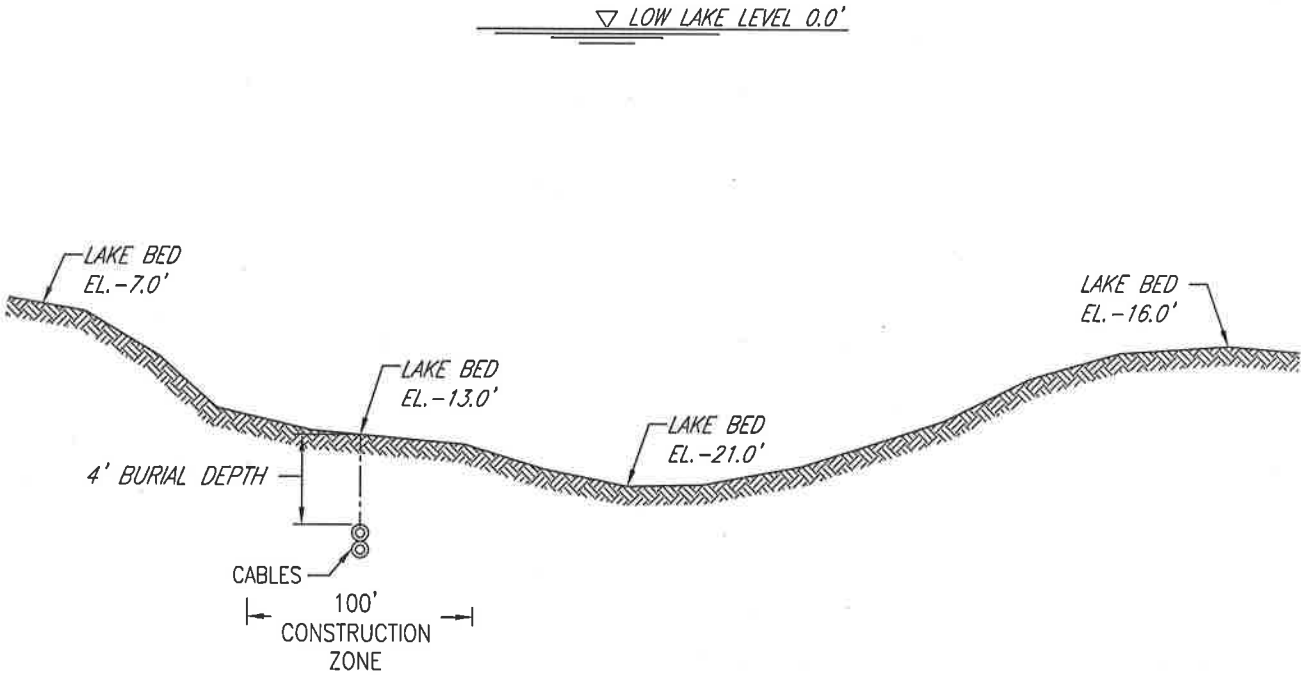

LAKE CHAMPLAIN-1 TYPICAL CROSS SECTION

NOTES: (1) MUDLINE ELEVATION BASED ON MP 80.
(2) REFERENCE NOAA CHARTS 14781, 14782, 14783, 14784.
(3) SEE LAKE CHAMPLAIN-3 & 4 FOR ILLUSTRATIONS OF TYPICAL CABLE INSTALLATION OVER BEDROCK.
(4) FOR TABLE OF ANTICIPATED NON-BURIAL LOCATIONS, SEE LAKE CHAMPLAIN-5.
(5) THE DEFINED CONSTRUCTION ZONE WILL BE REDUCED, AS NEEDED, TO AVOID PROTECTED AREAS.

1"=600' Horizontal Scale
1"=10' Vertical Scale

NAN-2009-01089-EYA
ATTACHMENT 5

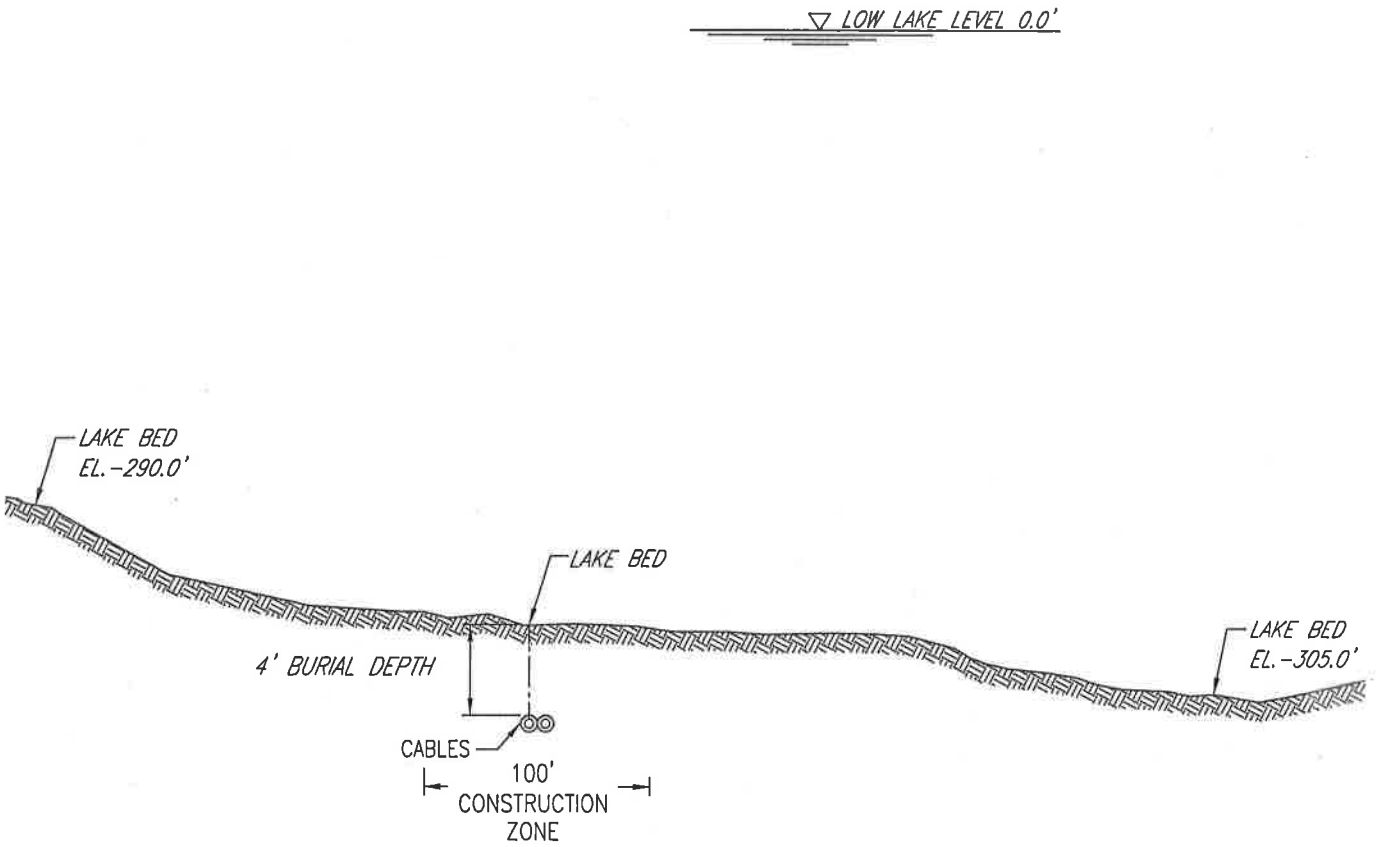

LAKE CHAMPLAIN-2 TYPICAL CROSS SECTION (DEEPER THAN EL -150')

NOTES: (1) MUDLINE ELEVATION BASED ON MP 49
(2) REFERENCE NOAA CHARTS 14781, 14782, 14783
(3) SUBJECT TO USACE APPROVAL, CABLE BURIAL IN DEPTHS GREATER THAN 150 FT WILL NOT BE REQUIRED UPON DEMOSTRATION THAT LAYING THE CABLES ON THE SURFACE IS NOT A NAVIGATION OR PUBLIC HEATH CONCERN.
(4) THE DEFINED CONSTRUCTION ZONE WILL BE REDUCED, AS NEEDED, TO AVOID PROTECTED AREAS.

1"=600' Horizontal Scale
1"=60' Vertical Scale

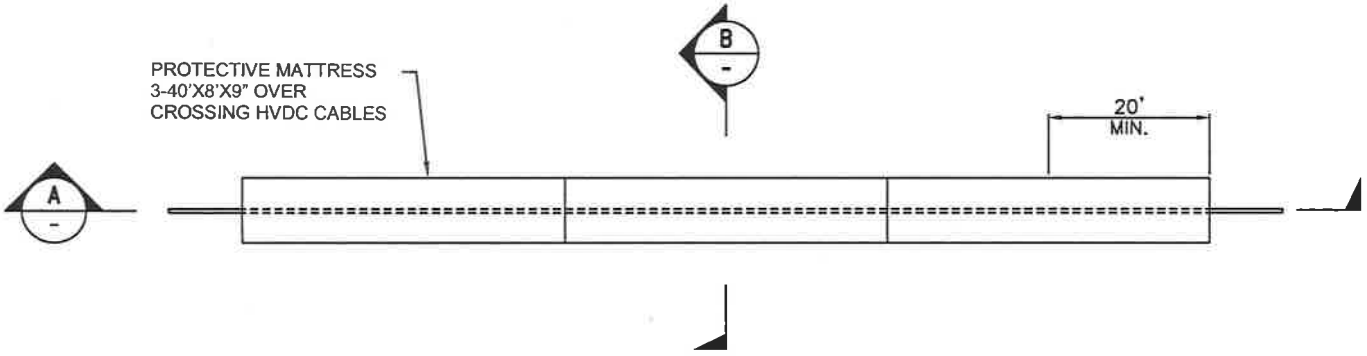

PLAN
SCALE: N.T.S.

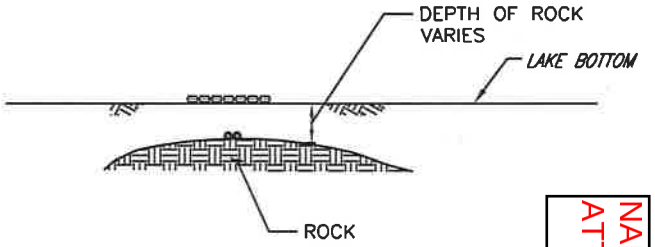

B - CROSS SECTION
SCALE: N.T.S.

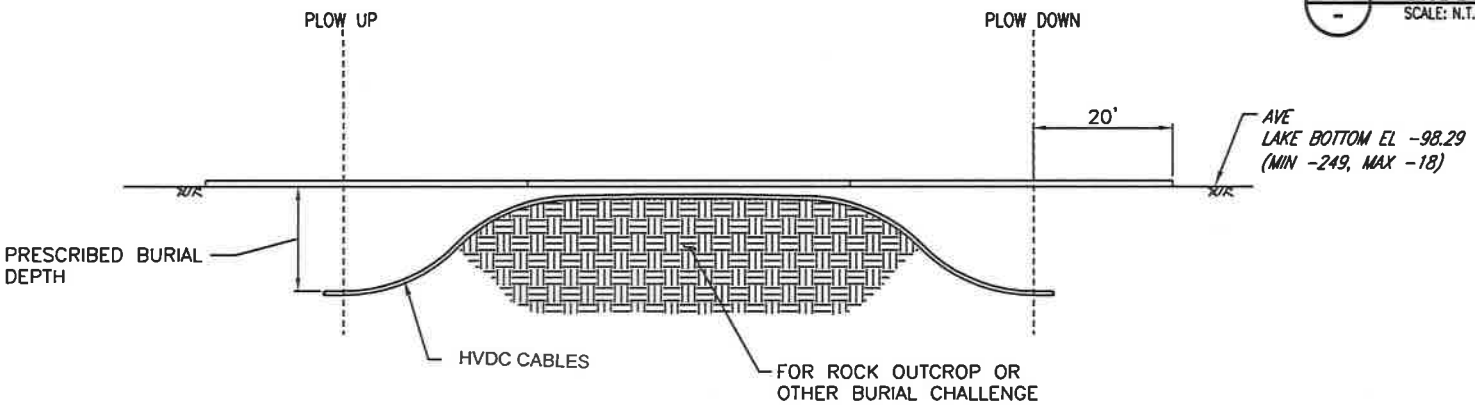

A - PROFILE SECTION
SCALE: N.T.S.

NAN-2009-01089-EYA
ATTACHMENT 5

NOTES:

1. SITE SPECIFIC DETAILS DEFINING PROTECTIVE MEASURES, MINIMUM CLEARANCES, SKEW ANGLE TOLERANCE, ETC. TO BE DEFINED ON A CASE-BY-CASE BASIS.
2. CABLE PROTECTION MAY BE ARTICULATED CONCRETE MATTRESSES, GROUT BAGS, RIP RAP, ARTICULATED PIPE SECTIONS OR OTHER INDUSTRY STANDARD, SUBJECT TO USACE AND OTHER PERMITTING AUTHORITY APPROVALS, AS APPLICABLE.
3. HEXAGON SHAPE OF MATTRESS CELLS WILL TEND TO SETTLE INTO OVERBURDEN WERE PRESENT.
4. "PLOW UP AND "PLOW DOWN" REFER TO THE RAISING AND LOWERING OF THE HYDRO PLOW BURIAL ELEMENT (i.e., STINGER) TO THE PRESCRIBED BURIAL DEPTH.

AECOM
Project Name: Champlain Hudson Power Express Project

TYPICAL CABLE INSTALLATION OVER ROCK
LAKE CHAMPLAIN
– REDUCED BURIAL –

Figure: LAKE CHAMPLAIN–3

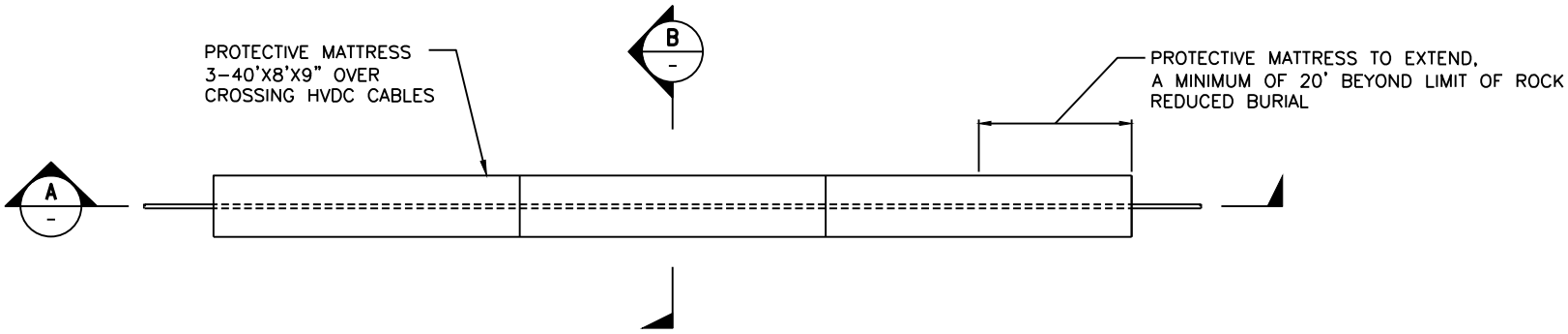

PLAN
SCALE: N.T.S.

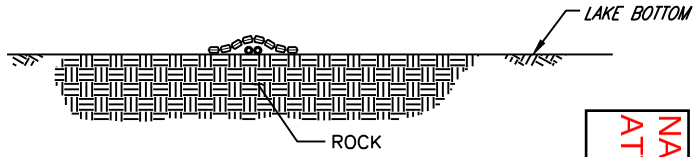

B - CROSS SECTION
SCALE: N.T.S.

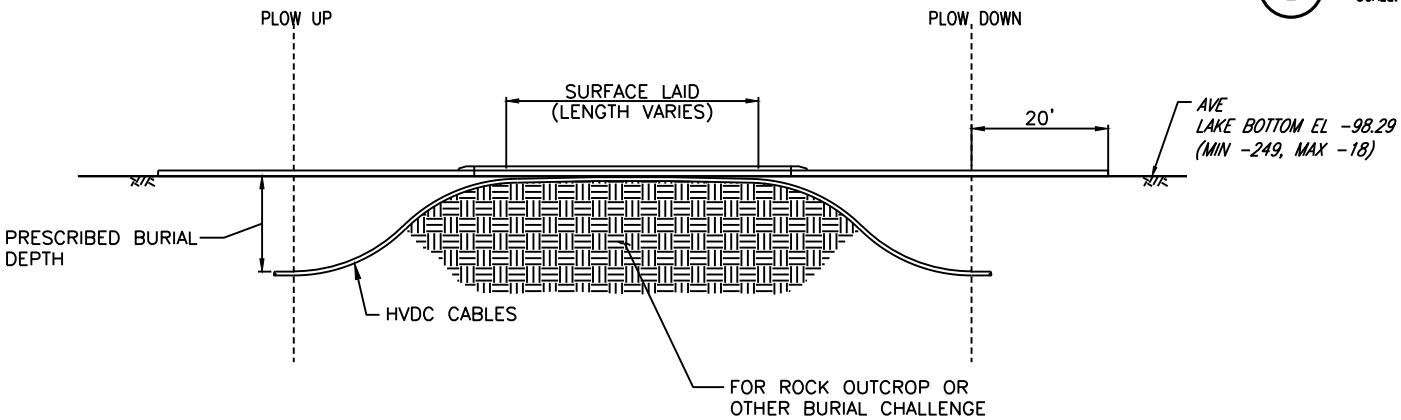

A - PROFILE SECTION
SCALE: N.T.S.

NAN-2009-01089-EYA
ATTACHMENT 5

NOTES:

1. SITE SPECIFIC DETAILS DEFINING PROTECTIVE MEASURES, MINIMUM CLEARANCES, SKEW ANGLE TOLERANCE, ETC. TO BE DEFINED ON A CASE-BY-CASE BASIS.
2. CABLE PROTECTION MAY BE ARTICULATED CONCRETE MATTRESSES, GROUT BAGS, RIP RAP, ARTICULATED PIPE SECTIONS OR OTHER INDUSTRY STANDARD, SUBJECT TO USACE AND OTHER PERMITTING AUTHORITY APPROVALS, AS APPLICABLE.
3. HEXAGON SHAPE OF MATRESS CELLS WILL TEND TO SETTLE INTO OVERBURDEN WERE PRESENT.
4. "PLOW UP AND "PLOW DOWN" REFER TO THE RAISING AND LOWERING OF THE HYDRO PLOW BURIAL ELEMENT (i.e., STINGER) TO THE PRESCRIBED BURIAL DEPTH.

AECOM
Project Name: Champlain Hudson Power Express Project

TYPICAL CABLE CROSSING WITHIN FNC
LAKE CHAMPLAIN
- SURFACE LAID -

Figure: LAKE CHAMPLAIN-4

Anticipated Non-Burial Locations
Lake Champlain (Rock)

MP	Crossing Type	Lakebed Elevation (NAVD 83)
9.0	Cable Protection - Natural Bedrock	-22.57
10.3	Cable Protection - Natural Bedrock	-32.57
11.3	Cable Protection - Natural Bedrock	-24.57
15.6	Cable Protection - Natural Bedrock	-77.57
19.9	Cable Protection - Natural Bedrock	-60.57
20.9	Cable Protection - Natural Bedrock	-143.57
41.3	Cable Protection - Natural Bedrock	-117.57
44.0	Cable Protection - Natural Bedrock	-205.57
46.3	Cable Protection - Natural Bedrock	-215.57
59.2	Cable Protection - Natural Bedrock	-240.57

NAN-2009-01089-EYA
ATTACHMENT 5

NAN-2009-01089-EYA
ATTACHMENT 5

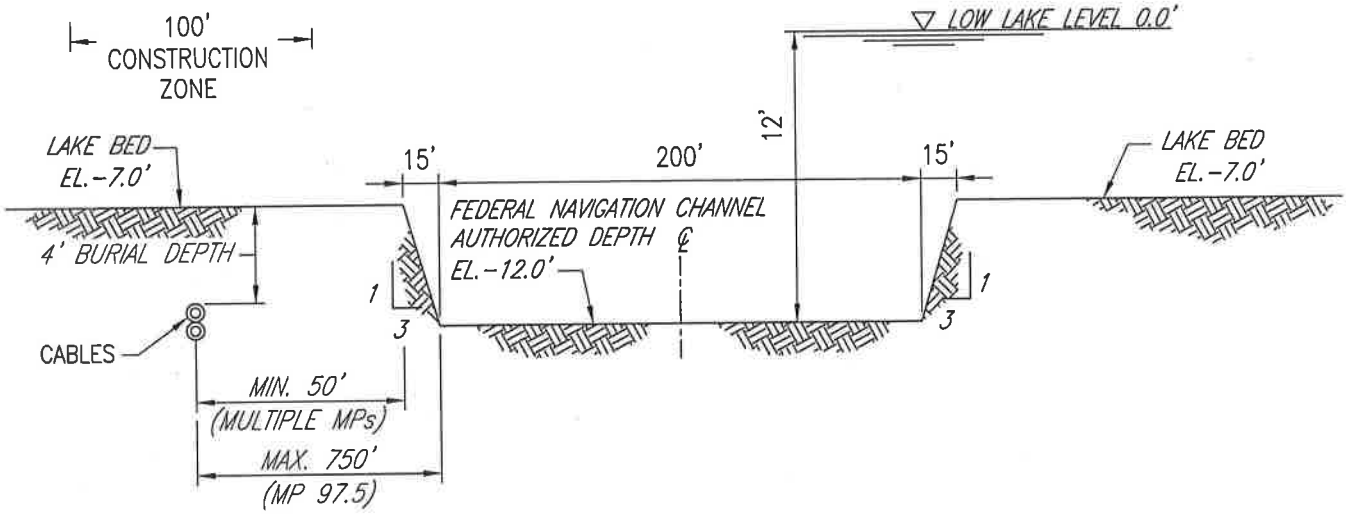

NARROWS OF LAKE CHAMPLAIN-1 TYPICAL CROSS SECTION

NOTES: (1) SIDE SLOPE AND MUDLINE ELEVATION BASED ON MP 99.
(2) REFERENCE NOAA CHART 14784.
(3) THE DEFINED CONSTRUCTION ZONE WILL BE REDUCED, AS NEEDED, TO AVOID PROTECTED AREAS.

1"=60' Horizontal Scale
1"=6' Vertical Scale

NAN-2009-01089-EYA
ATTACHMENT 5

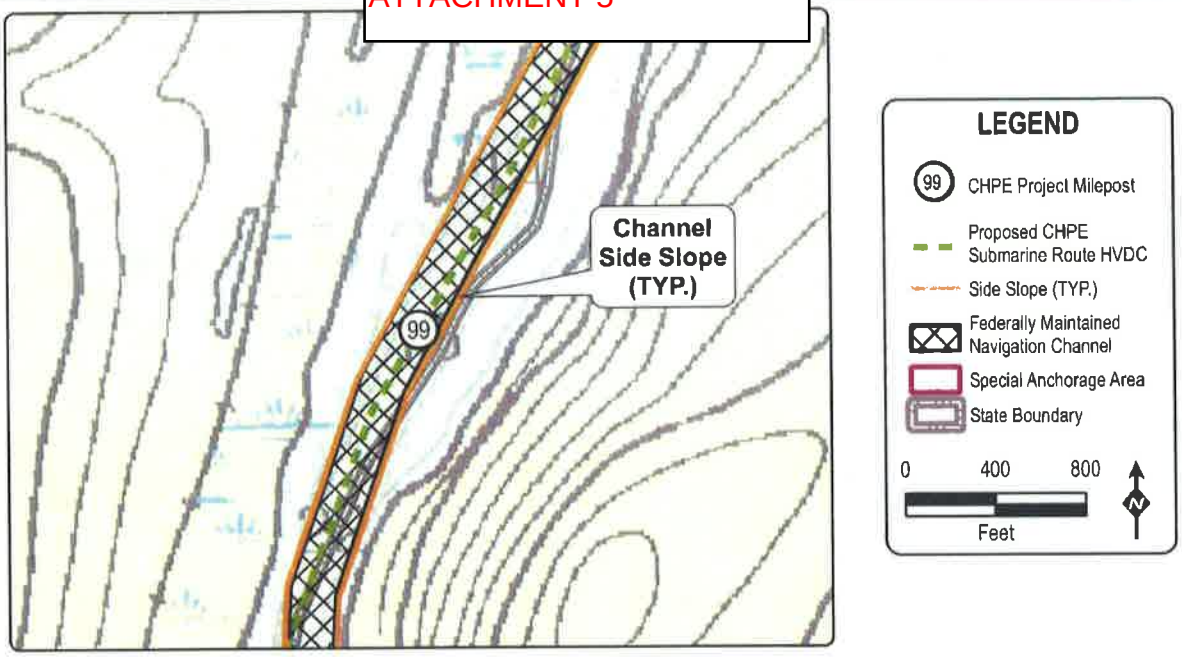

NARROWS OF LAKE CHAMPLAIN
MP 99 VICINITY MAP

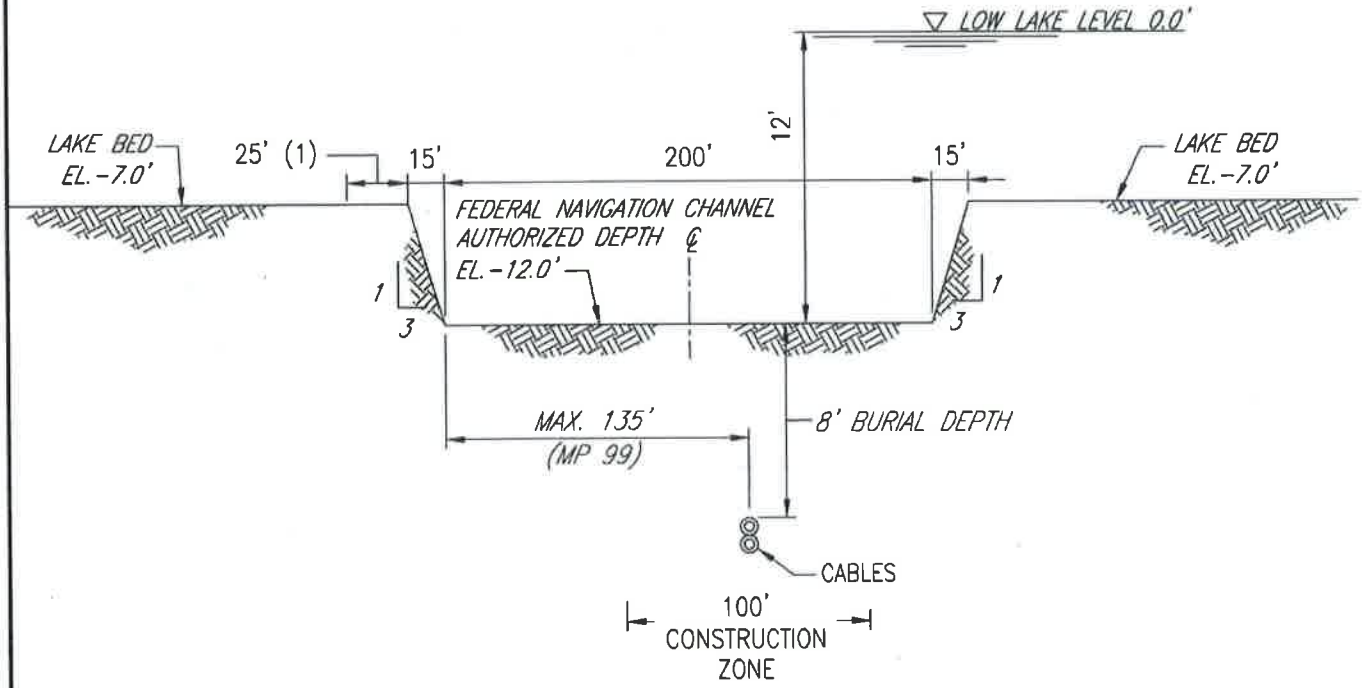

NARROWS OF LAKE CHAMPLAIN-2 TYPICAL CROSS SECTION

NOTES: (1) CABLES LOCATED WITHIN 25' OF THE FEDERAL NAVIGATION CHANNEL (FNC) WILL TRANSITION TO BURIAL AT 8' BELOW THE FNC AUTHORIZED DEPTH.
(2) SIDE SLOPE AND MUDLINE ELEVATION BASED ON CHPE MP 99.
(3) REFERENCE NOAA CHART 14784.
(4) THE DEFINED CONSTRUCTION ZONE WILL BE REDUCED, AS NEEDED, TO AVOID PROTECTED AREAS.

1"=60' Horizontal Scale
1"=6' Vertical Scale

AECOM
Project Name: Champlain Hudson Power Express Project

Figure: Narrows of Lake Champlain-2

NAN-2009-01089-EYA
ATTACHMENT 5

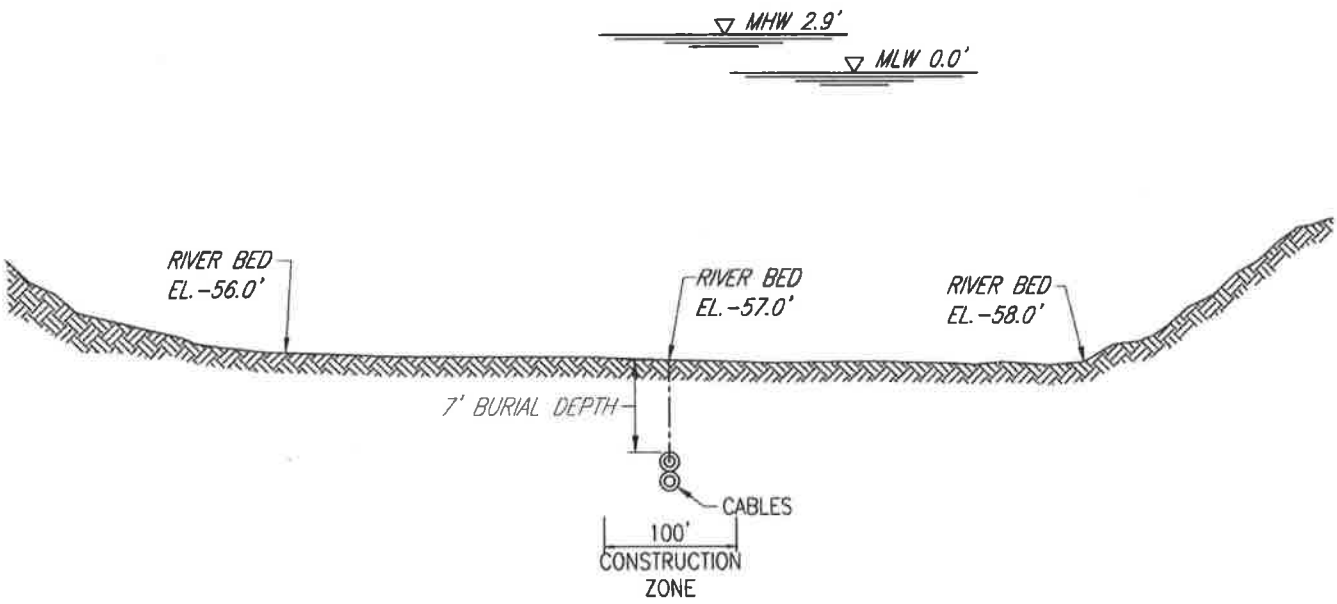

HUDSON-1 TYPICAL CROSS SECTION

NOTES: (1) MUDLINE ELEVATION BASED ON MP 270.
(2) REFERENCE NOAA CHART 12343, 12347.
(3) THERE ARE NO KNOWN UTILITY CROSSINGS IN THE FNC IN THE HUDSON RIVER.
(4) SEE HUDSON-4 & 5 FOR ILLUSTRATION OF TYPICAL CABLE INSTALLATION OVER BEDROCK.
(5) SEE HUDSON-6 FOR LISTING OF ANTICIPATED INSTANCES OF CABLE INSTALLATION OVER BEDROCK.
(6) THE DEFINED CONSTRUCTION ZONE WILL BE REDUCED, AS NEEDED, TO AVOID PROTECTED AREAS.

1"=400' Horizontal Scale
1"=10' Vertical Scale

NAN-2009-01089-EYA
ATTACHMENT 5

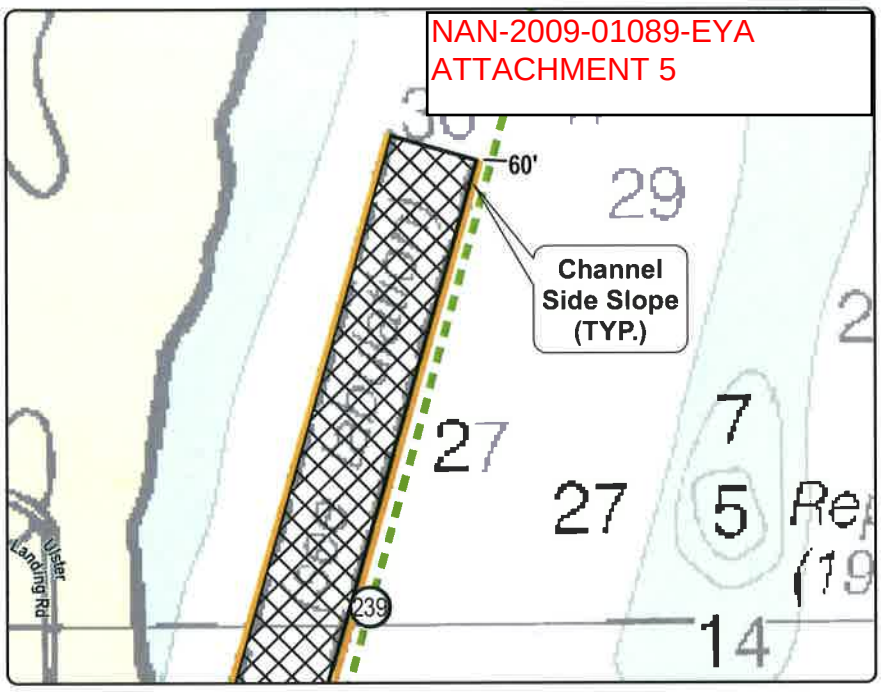

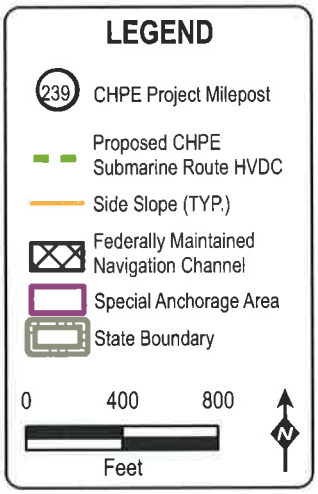

HUDSON RIVER – MP 238.6 VICINITY MAP

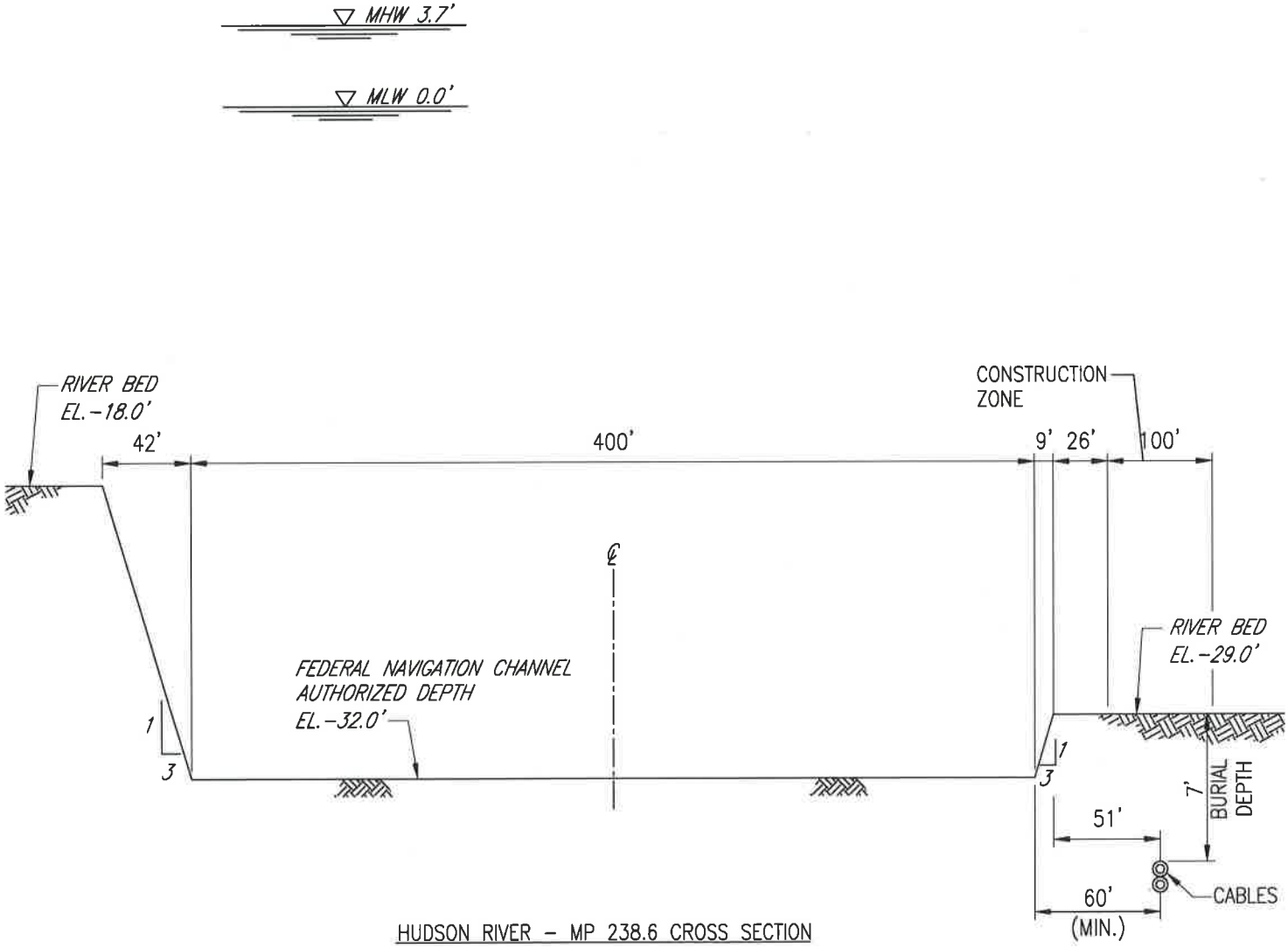

HUDSON RIVER – MP 238.6 CROSS SECTION

NOTES: (1) REFERENCE NOAA CHARTS 12347.
(2) THE DEFINED CONSTRUCTION ZONE WILL BE REDUCED, AS NEEDED, TO AVOID PROTECTED AREAS.

1"=60' Horizontal Scale
1"=6' Vertical Scale

AECOM

Project Name: Champlain Hudson Power Express Project

Figure: HUDSON-2

NAN-2009-01089-EYA
ATTACHMENT 5

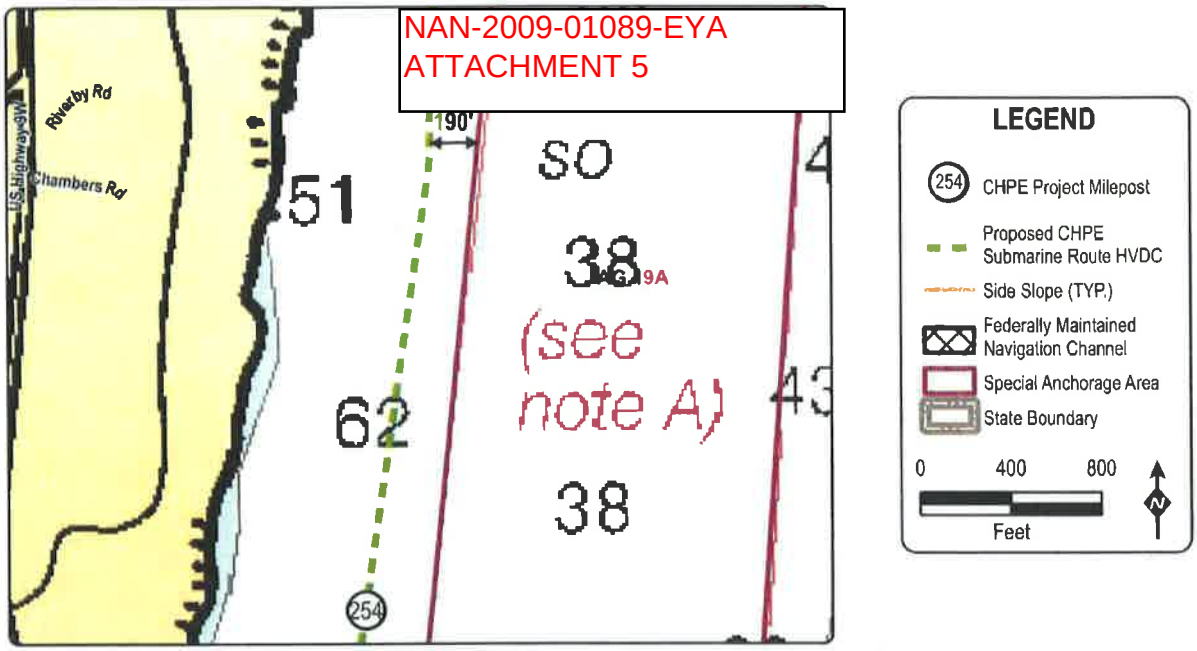

HUDSON RIVER – MP 253.6 ANCHORAGE AREA VICINITY MAP

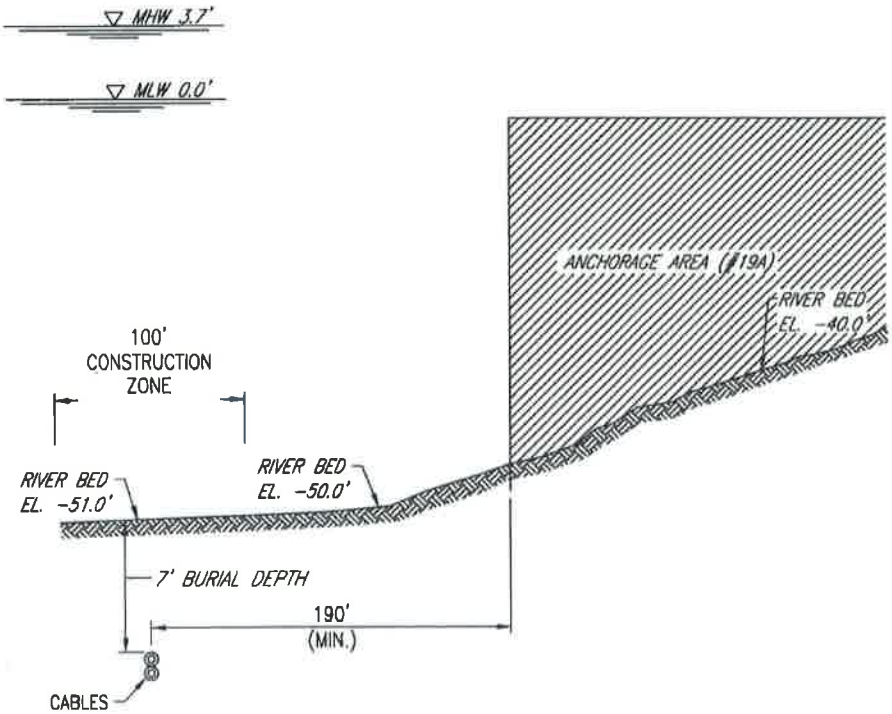

HUDSON RIVER MP 253.6 – ANCHORAGE AREA CROSS SECTION

NOTES: (1) REFERENCE NOAA CHARTS 12347.
(2) THE DEFINED CONSTRUCTION ZONE WILL BE REDUCED, AS NEEDED, TO AVOID PROTECTED AREAS.

1"=60' Horizontal Scale
1"=6' Vertical Scale

AECOM

Project Name: Champlain Hudson Power Express Project

Figure: HUDSON-3

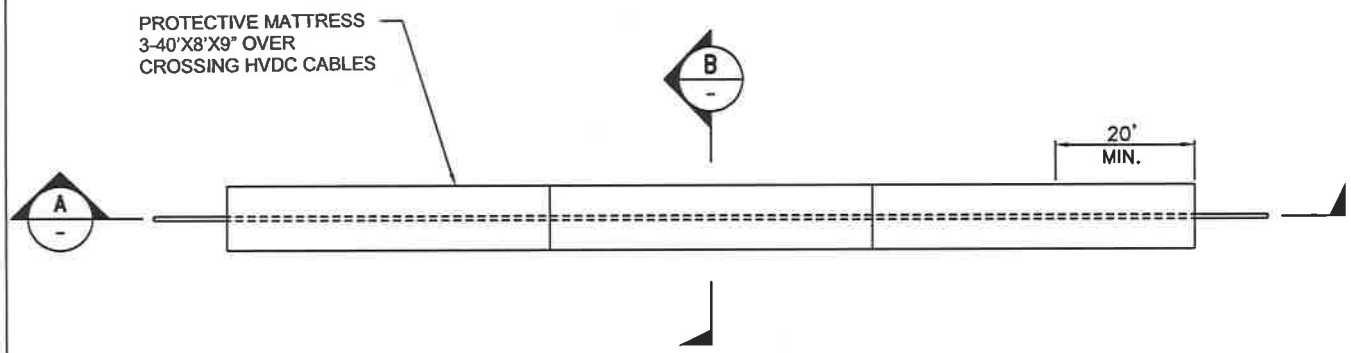

PLAN
SCALE: N.T.S.

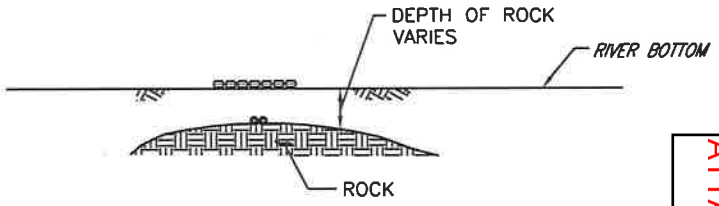

B - CROSS SECTION
SCALE: N.T.S.

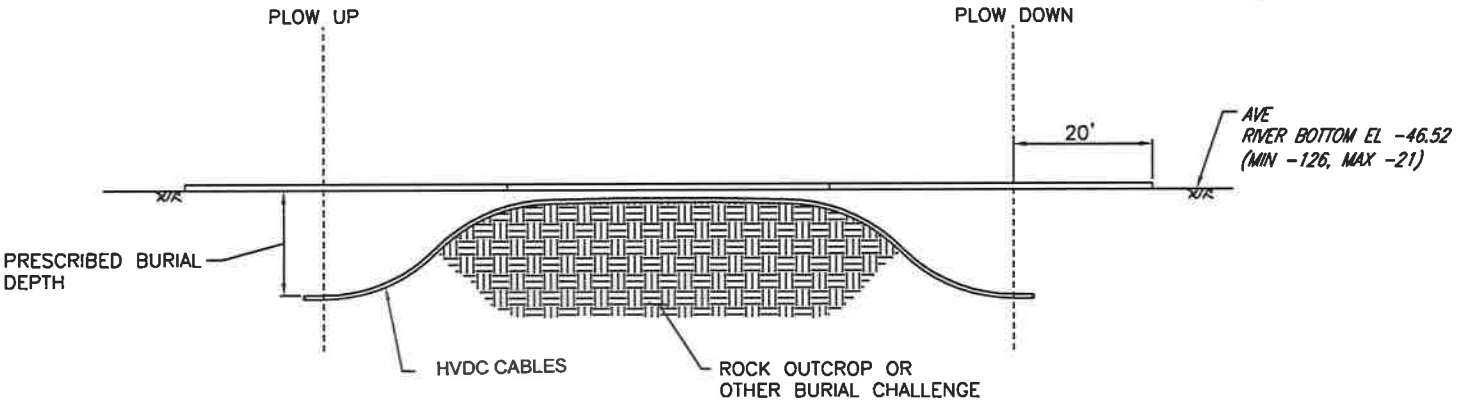

A - PROFILE SECTION
SCALE: N.T.S.

NAN-2009-01089-EYA
ATTACHMENT 5

NOTES:

1. SITE SPECIFIC DETAILS DEFINING PROTECTIVE MEASURES, MINIMUM CLEARANCES, SKEW ANGLE TOLERANCE, ETC. TO BE DEFINED ON A CASE-BY-CASE BASIS.
2. CABLE PROTECTION MAY BE ARTICULATED CONCRETE MATTRESSES, GROUT BAGS, RIP RAP, ARTICULATED PIPE SECTIONS OR OTHER INDUSTRY STANDARD, SUBJECT TO USACE AND OTHER PERMITTING AUTHORITY APPROVALS, AS APPLICABLE.
3. HEXAGON SHAPE OF MATTRESS CELLS WILL TEND TO SETTLE INTO OVERBURDEN WERE PRESENT.
4. "PLOW UP" AND "PLOW DOWN" REFER TO THE RAISING AND LOWERING OF THE HYDRO PLOW BURIAL ELEMENT (i.e., STINGER) TO THE PRESCRIBED BURIAL DEPTH.

AECOM
Project Name: Champlain Hudson Power Express Project

TYPICAL CABLE INSTALLATION OVER ROCK
HUDSON RIVER
– REDUCED BURIAL –

Figure: HUDSON-4

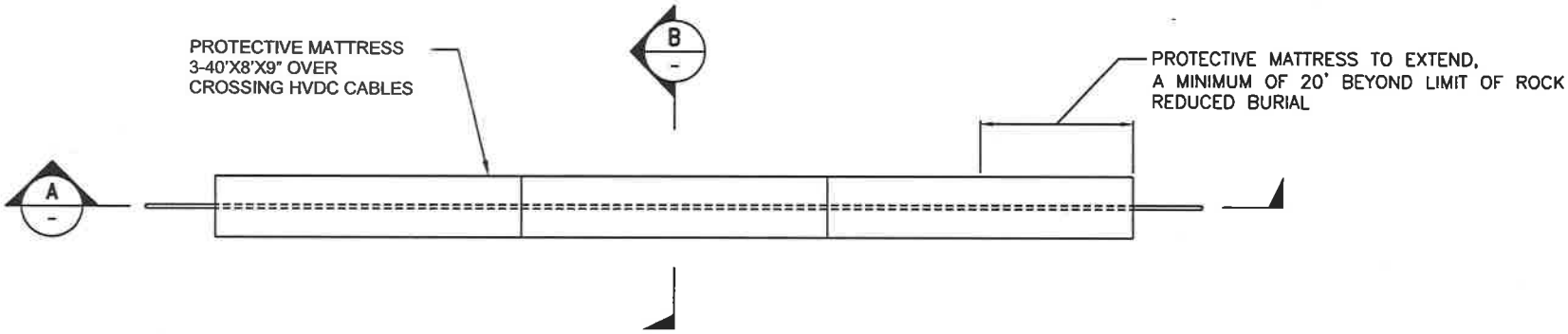

PLAN
SCALE: N.T.S.

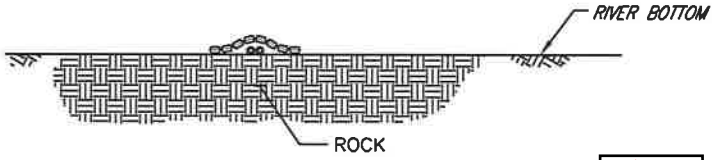

B - CROSS SECTION
SCALE: N.T.S.

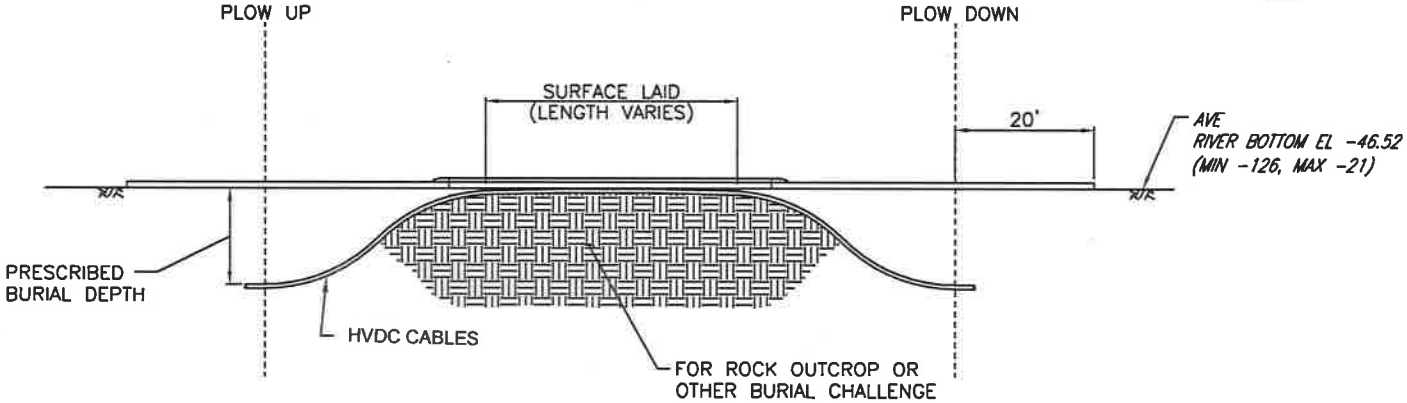

A - PROFILE SECTION
SCALE: N.T.S.

NAN-2009-01089-EYA
ATTACHMENT 5

NOTES:

1. SITE SPECIFIC DETAILS DEFINING PROTECTIVE MEASURES, MINIMUM CLEARANCES, SKEW ANGLE TOLERANCE, ETC. TO BE DEFINED ON A CASE-BY-CASE BASIS.
2. CABLE PROTECTION MAY BE ARTICULATED CONCRETE MATTRESSES, GROUT BAGS, RIP RAP, ARTICULATED PIPE SECTIONS OR OTHER INDUSTRY STANDARD, SUBJECT TO USACE AND OTHER PERMITTING AUTHORITY APPROVALS, AS APPLICABLE.
3. HEXAGON SHAPE OF MATTRESS CELLS WILL TEND TO SETTLE INTO OVERBURDEN WERE PRESENT.
4. "PLOW UP" AND "PLOW DOWN" REFER TO THE RAISING AND LOWERING OF THE HYDRO PLOW BURIAL ELEMENT (i.e., STINGER) TO THE PRESCRIBED BURIAL DEPTH.

AECOM
Project Name: Champlain Hudson Power Express Project

TYPICAL CABLE INSTALLATION OVER ROCK
HUDSON RIVER
– SURFACE LAID –

Figure: HUDSON-5

Anticipated Non-Burial Locations - Hudson River (Rock)

MP	Crossing Type	Riverbed Elevation (MLW)
229.2	Cable Protection - Natural Bedrock	-49.57
259.9	Cable Protection - Natural Bedrock	-52.57
260.1	Cable Protection - Natural Bedrock	-52.57
262.2	Cable Protection - Natural Bedrock	-59.57
263.3	Cable Protection - Natural Bedrock	-39.57
268.5	Cable Protection - Natural Bedrock	-37.57
283.4	Cable Protection - Natural Bedrock	-73.57
286.7	Cable Protection - Natural Bedrock	-82.57
292.2	Cable Protection - Natural Bedrock	-58.57
292.5	Cable Protection - Natural Bedrock	-36.57

NAN-2009-01089-EYA
ATTACHMENT 5

NAN-2009-01089-EYA
ATTACHMENT 5

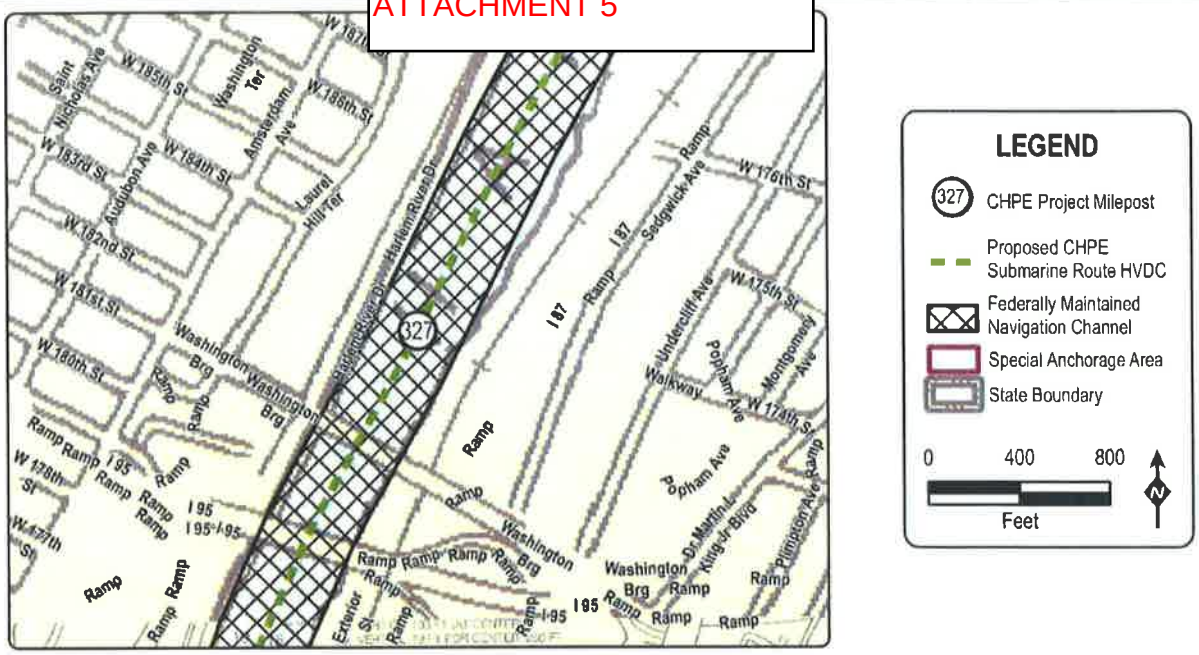

HARLEM RIVER – TYPICAL VICINITY MAP (SEDIMENT)

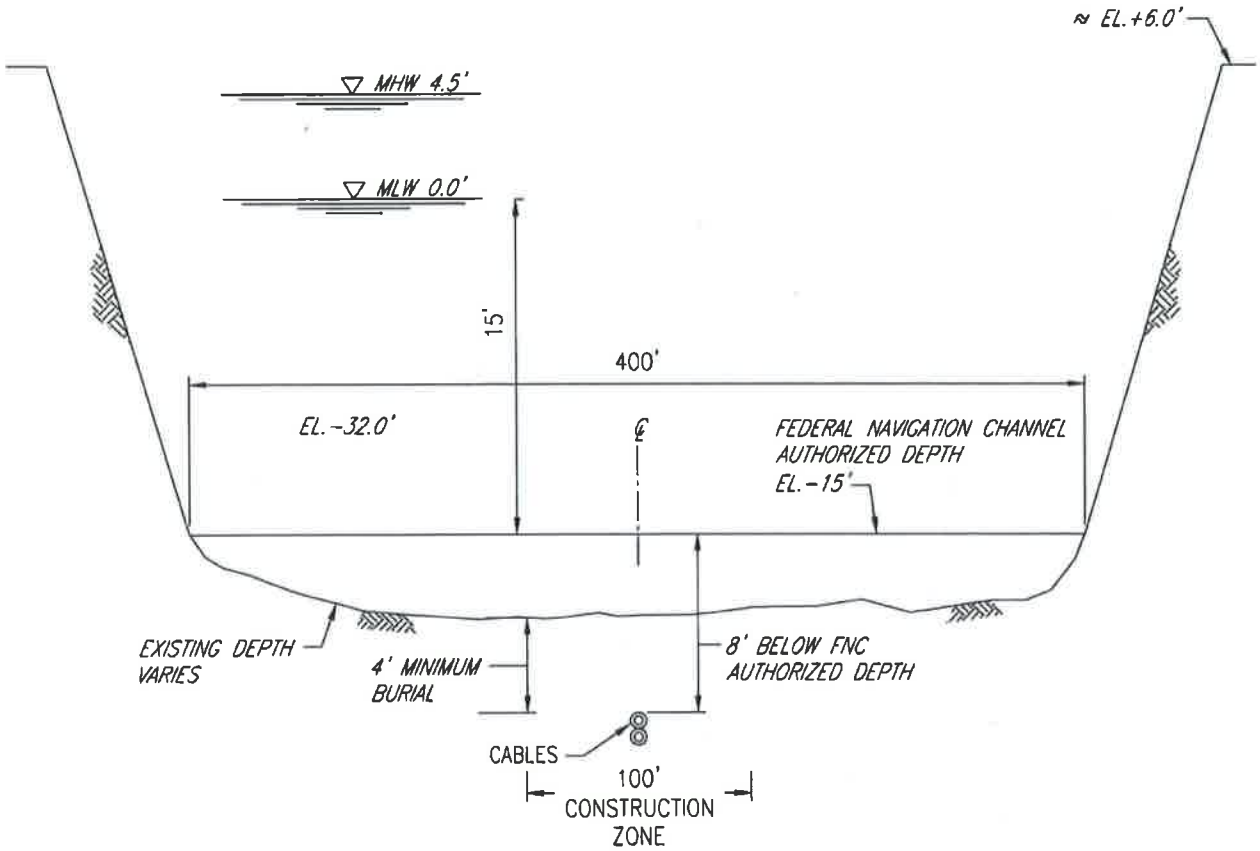

HARLEM RIVER–TYPICAL CROSS SECTION (SEDIMENT)

NOTES: (1) REFERENCE NOAA CHART 12342.
(2) SEE HARLEM 3 & 4 FOR ILLUSTRATIONS OF TYPICAL CHPE UTILITY CROSSINGS.
(3) SEE HARLEM 5 FOR LISTINGS OF ANTICIPATED CHPE UTILTIY CROSSINGS.
(4) SEE HARLEM 5 & 6 FOR ILLUSTRATION OF TYPICAL INSTALLATION OVER BED ROCK.
(5) FOR TABLE OF ANTICIPATED NON-BURIAL LOCATIONS, SEE HARLEM-7.
(6) THE DEFINED CONSTRUCTION ZONE WILL BE REDUCED, AS NEEDED, TO AVOID PROTECTED AREAS.

1"=60' Horizontal Scale
1"=6' Vertical Scale

AECOM

Project Name: Champlain Hudson Power Express Project

Figure: HARLEM-1

NAN-2009-01089-EYA
ATTACHMENT 5

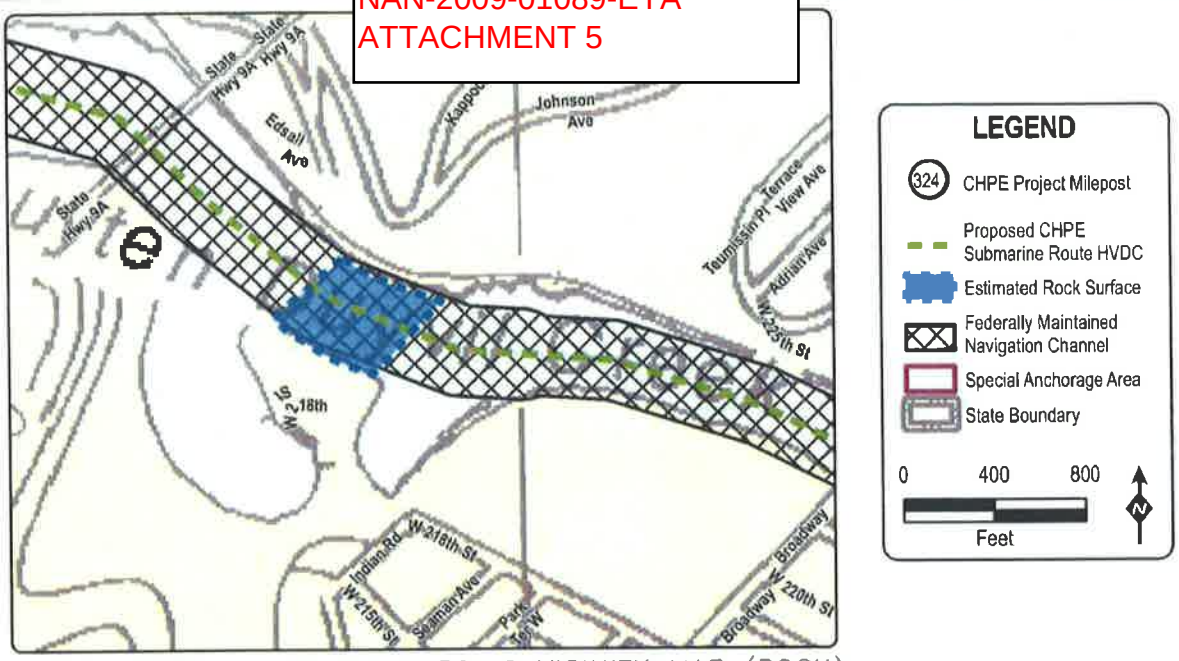

HARLEM RIVER – MP 324.4–324.6 VICINITY MAP (ROCK)

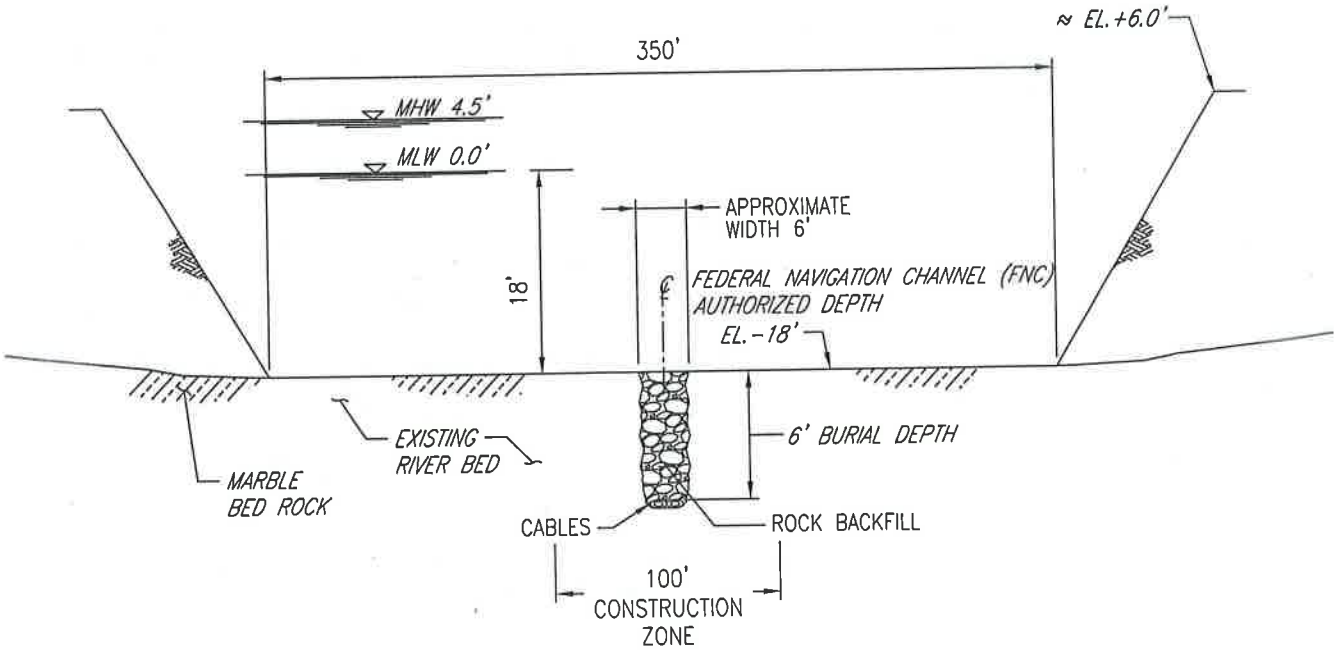

HARLEM–2 TYPICAL CROSS SECTION (ROCK)

NOTES: (1) REFERENCE NOAA CHART 12342.
(2) CABLE BURIAL OF 6' BELOW THE FNC MAY BE UNATTAINABLE, DUE TO RESTRICTIONS ON EXCAVATION METHODOLOGIES. TECHNOLOGICAL LIMITATIONS AND ECONOMIC CONSTRAINTS.
(3) SEE HARLEM 3 & 4 FOR ILLUSTRATIONS OF TYPICAL CHPE UTILITY CROSSINGS.
(4) SEE HARLEM 7 FOR LISTINGS OF ANTICIPATED CHPE UTILITY CROSSINGS.
(5) THE DEFINED CONSTRUCTION ZONE WILL BE REDUCED, AS NEEDED, TO AVOID PROTECTED AREAS.

1"=60' Horizontal Scale
1"=12' Vertical Scale

AECOM

Project Name: Champlain Hudson Power Express Project

Figure: HARLEM-2

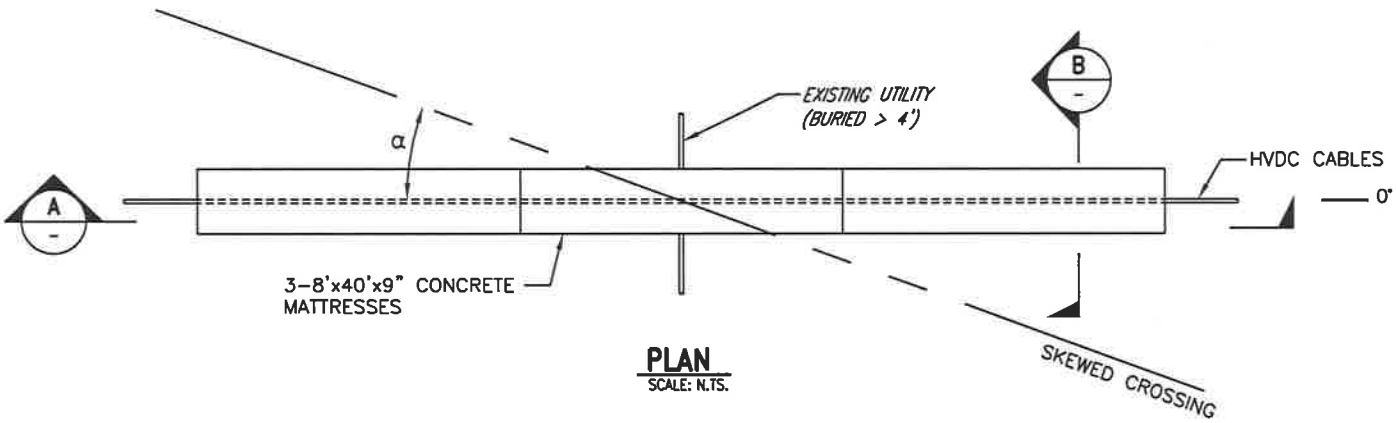

PLAN
SCALE: N.TS.

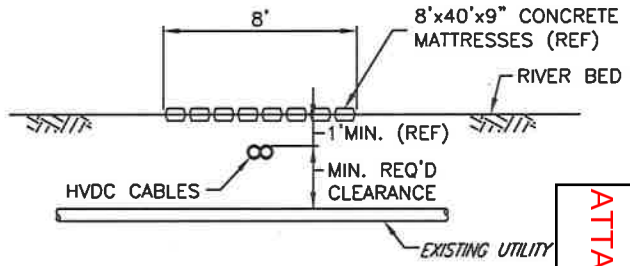

B CROSS SECTION
SCALE: N.T.S.

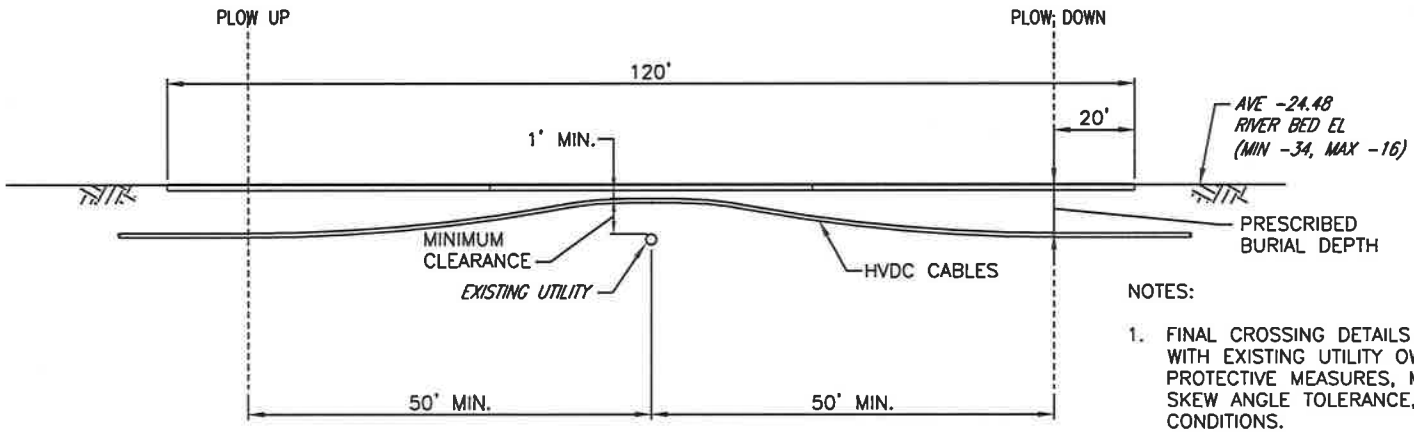

A PROFILE SECTION
SCALE: N.T.S.

NOTES:

1. FINAL CROSSING DETAILS SHALL BE DEVELOPED IN CONSULTATI WITH EXISTING UTILITY OWNER. SITE SPECIFIC DETAILS DEFINING PROTECTIVE MEASURES, MINIMUM CLEARANCES, DEPTH OF COV SKEW ANGLE TOLERANCE, ETC. TO BE DEFINED ON CASE-BY-CASE CONDITIONS.
2. CABLE PROTECTION MAY BE ARTICULATED CONCRETE MATTRESSES, GROUT BAGS, RIP RAP, ARTICULATED PIPE SECTIONS OR OTHER INDUSTRY STANDARD, SUBJECT TO USACE AND OTHER PERMITTING AUTHORITY APPROVALS, AS APPLICABLE.
3. MINIMUM CLEARANCE REQUIREMENTS TO BE DEFINED IN CONSULTATION WITH THE EXISTING UTILITY OWNER.
4. "PLOW UP" AND "PLOW DOWN" REFER TO THE RAISING AND LOWERING OF THE HYDRO PLOW BURIAL ELEMENT (IE, STINGER) TO THE PRESCRIBED BURIAL DEPTH.
5. HEXAGON SHAPE OF MATTRESS CELLS WILL TEND TO SETTLE INTO THE RIVER BED.
6. SEE HARLEM 3 & 4 FOR ILLUSTRATION OF TYPICAL CHPE UTILITY CROSSINGS.
7. SEE HARLEM 5 FOR LISTING OF ANTICIPATED CHPE UTILTIY CROSSINGS

NAN-2009-01089-EYA
ATTACHMENT 5

AECOM
Project Name: Champlain Hudson Power Express Project

TYPICAL CABLE CROSSING WITHIN FNC
HARLEM RIVER
– REDUCED BURIAL –

Figure: HARLEM–3

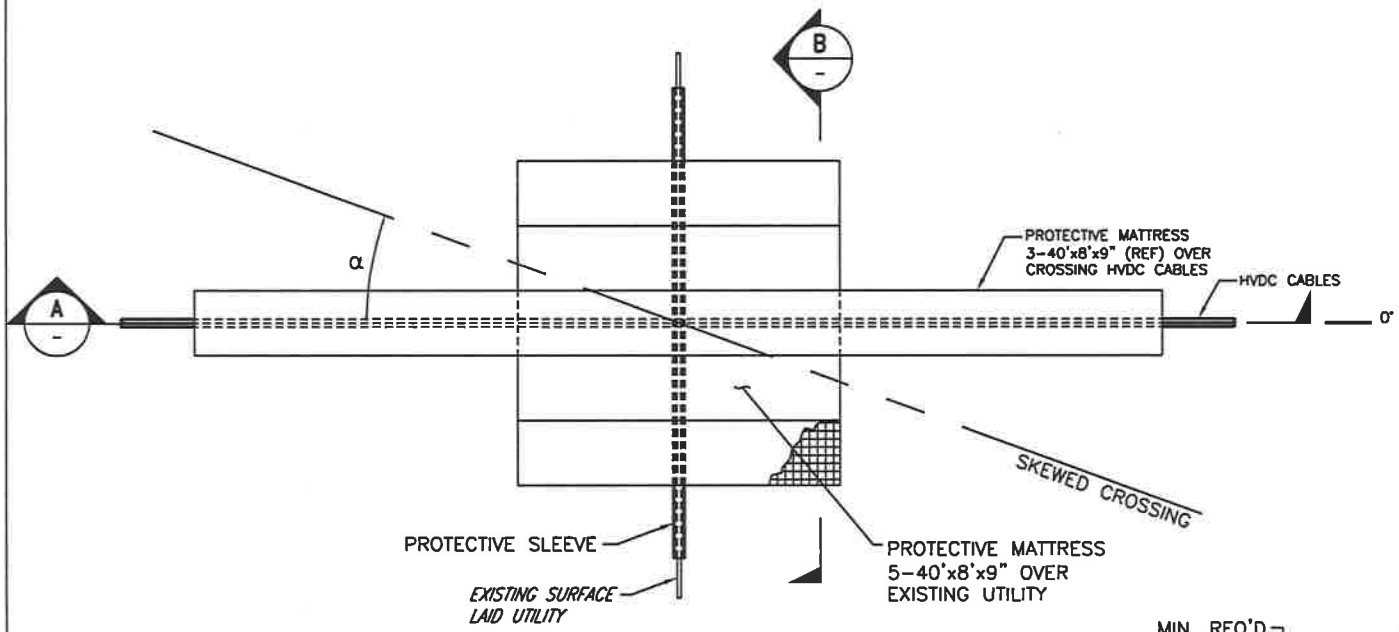

PLAN
SCALE: N.T.S.

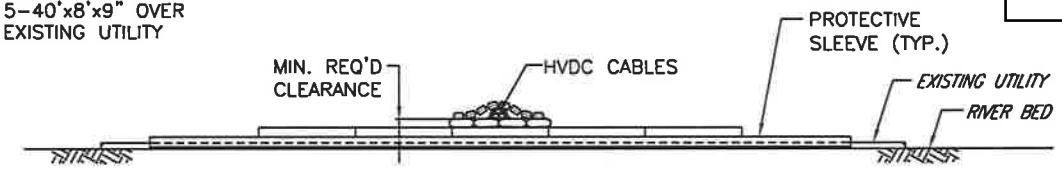

B CROSS SECTION
SCALE: N.T.S.

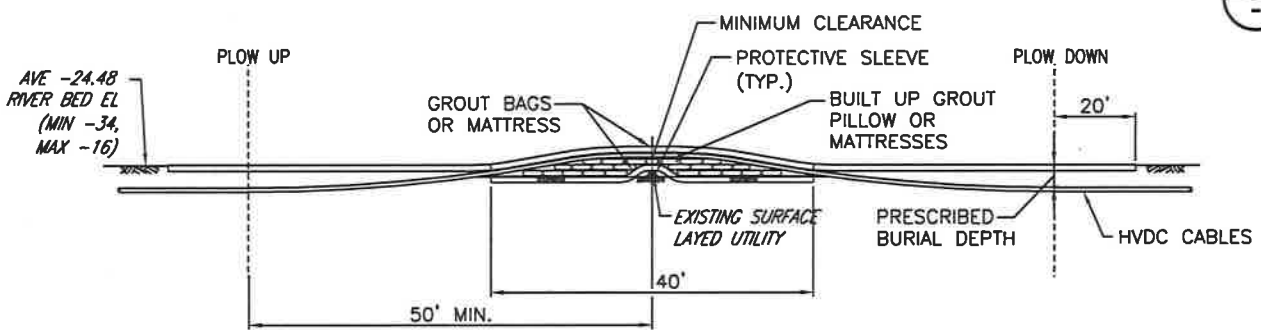

A PROFILE SECTION
SCALE: N.T.S.

NOTES:

1. FINAL CROSSING DETAILS SHALL BE DEVELOPED IN CONSULTATION WITH EXISTING UTILITY OWNER. SITE SPECIFIC DETAILS DEFINING PROTECTIVE MEASURES, MINIMUM CLEARANCES, DEPTH OF COVER, SKEW ANGLE TOLERANCE, ETC. TO BE DEFINED ON CASE-BY-CASE CONDITIONS.
2. CABLE PROTECTION MAY BE ARTICULATED CONCRETE MATTRESSES, GROUT BAGS, RIP RAP, ARTICULATED PIPE SECTIONS OR OTHER INDUSTRY STANDARD, SUBJECT TO USACE AND OTHER PERMITTING AUTHORITY APPROVALS, AS APPLICABLE.
3. MINIMUM CLEARANCE REQUIREMENTS TO BE DEFINED IN CONSULTATION WITH THE EXISTING UTILITY OWNER.
4. "PLOW UP" AND "PLOW DOWN" REFER TO THE RAISING AND LOWERING OF THE HYDRO PLOW BURIAL ELEMENT (i.e., STINGER) TO THE PRESCRIBED BURIAL DEPTH.
5. PERPENDICULAR LOWER MAT ORIENTATION TO THE EXISTING UTILITY WILL ACCOMMODATE SKEWED CROSSING OF HVDC CABLES OVER THE EXISTING UTILITY.

AECOM
Project Name: Champlain Hudson Power Express Project

TYPICAL CABLE CROSSING WITHIN FNC
HARLEM RIVER
– REDUCED BURIAL –

Figure: HARLEM-4

Attachment 6 - Typical Drawings Overland Cable Installation

NAN-2009-01089
ATTACHMENT 6

NOTES:

1. COFFERDAM TO BE UTILIZED WHERE NECESSARY TO STABILIZE BOTTOM SEDIMENT AT HDD TERMINUS OTHER ALTERNATIVES PROVIDING EQUIVALENT ENVIRONMENTAL PROTECTION MAY BE EMPLOYED WHERE BOTTOM CONDITIONS DO NOT PERMIT DRIVEN PILES.
2. PILES SHALL BE REMOVED OR CUT BELOW THE MUD LINE. AT COMPLETION OF CABLE INSTALLATION IN COORDINATION WITH THE BMP REQUIREMENTS.
3. COFFERDAM WILL EXTEND ABOVE THE WATERLINE IN SHALLOW WATER. EXPOSED STRUCTURE WILL BE MARKED BY BUOYS AND OTHER NAVIGATION AIDS. A NOTICE TO MARINERS WILL BE ISSUED WHEN APPROPRIATE.
4. COFFERDAMS IN DEEP WATER NOT BE EXTENDED TO THE WATER SURFACE. EACH INSTALLATION WILL BE MARKED BY BUOYS AND OTHER NAVIGATION AIDS. A NOTICE TO MARINERS WILL BE ISSUED WHERE APPROPRIATE.

Designed	A WIRONEN
Drawn	KLB/TRC
Checked	.
Approved	.
Scale	NONE

No.	Revision	Date	By	Ck	PE	PE #
0	ISSUED FOR PERMIT	2/ 14/12	TRC	TRC	.	.

Transmission Developers Inc.

Champlain Hudson Power Express Project

Champlain Hudson Power Express Inc.

TYPICAL - TERRESTRIAL TRANSITION

176764-UM-41

Prepared by: HDR DTA & TRC 01/13/2012

NAN-2009-01089
ATTACHMENT 6

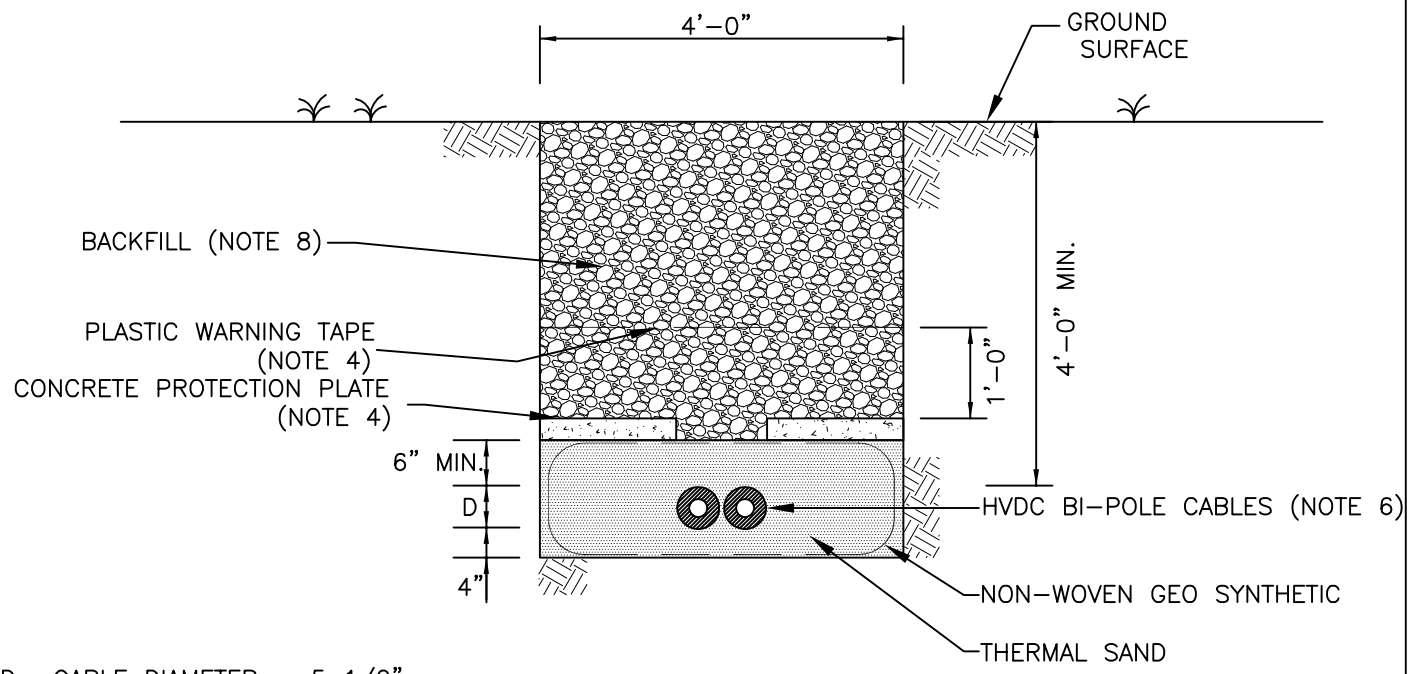

D= CABLE DIAMETER = 5 1/2"

NOTES:

1. CABLE SPACING MAY VARY BASED UPON CONTRACTOR INSTALLATION PREFERENCE AND LOCATION.

2. CABLES WILL BE BEDDED IN SCREENED SAND OR NATIVE SOIL. THERMAL SAND WILL BE USED WHERE REQUIRED. DEPTH OF THERMAL SAND OVER CABLE WILL BE FIELD DETERMINED FOLLOWING TESTING OF NATIVE SOILS.

3. GEOSYNTHETIC BLANKET WILL BE PROVIDED AROUND SAND BEDDING OVER THERMAL FILL WHEN INSTALLATION IS WITHIN FINE–GRADED SOILS.

4. CONCRETE PROTECTIVE PLATES WILL BE PROVIDED OVER EACH CABLE. AT CONTRACTORS OPTION, STORKBOARD OR APPROVED EQUAL UTILITY DIG–IN PROTECTION MAYBE USED IN LIEU OF CONCRETE PLATES AND WARNING TAPE.

5. EXCAVATION MAY BE VERTICAL SHORED OR LAYED BACK PER OSHA REQUIREMENTS WHERE NECESSARY.

6. INTENTION IS TO BURY CABLE IN A COMMON TRENCH IN CONTACT OR CLOSE PROXIMITY. INSTALLED SEPARATION DISTANCE MAY VARY WITH TRENCH CONDITIONS AND INSTALLATION TECHNIQUES.

7. PRIOR TO EXCAVATION PROVIDE EROSION AND SEDIMENT CONTROLS AS REQUIRED.

8. WHERE THERMAL PROPERTIES OF NATIVE SOIL PERMITS, THE NATIVE SOIL WILL BE USED AS BACKFILL, THEREBY ENHANCING RESTORATION OF THE NATURAL ENVIRONMENT.

9. ABOVE SKETCH IS TO PRESENT CONCEPTS. MORE RESTRICTIVE REQUIREMENTS OF THE RAILROAD, STATE OR OTHER AUTHORITY WILL BE REFLECTED IN THE DETAILED DESIGN REQUIREMENTS OF THE EM & CP DOCUMENTS.

Designed	WJL
Drawn	WJL
Checked	CRP
Approved	LEP
Scale	NTS

No.	Revision	Date	By	Ck	PE	PE #
0	ISSUED FOR PERMIT	12/06/10	TRC	TRC		
1	ISSUED FOR PERMIT	02/20/12	TRC	TRC		

Transmission Developers Inc.

Champlain Hudson Power Express Project

Champlain Hudson Power Express Inc.

TYPICAL TRENCH CROSS-SECTION

176764-UM-08

Prepared by: HDR | DTA & TRC 12/06/2010

NAN-2009-01089
ATTACHMENT 6

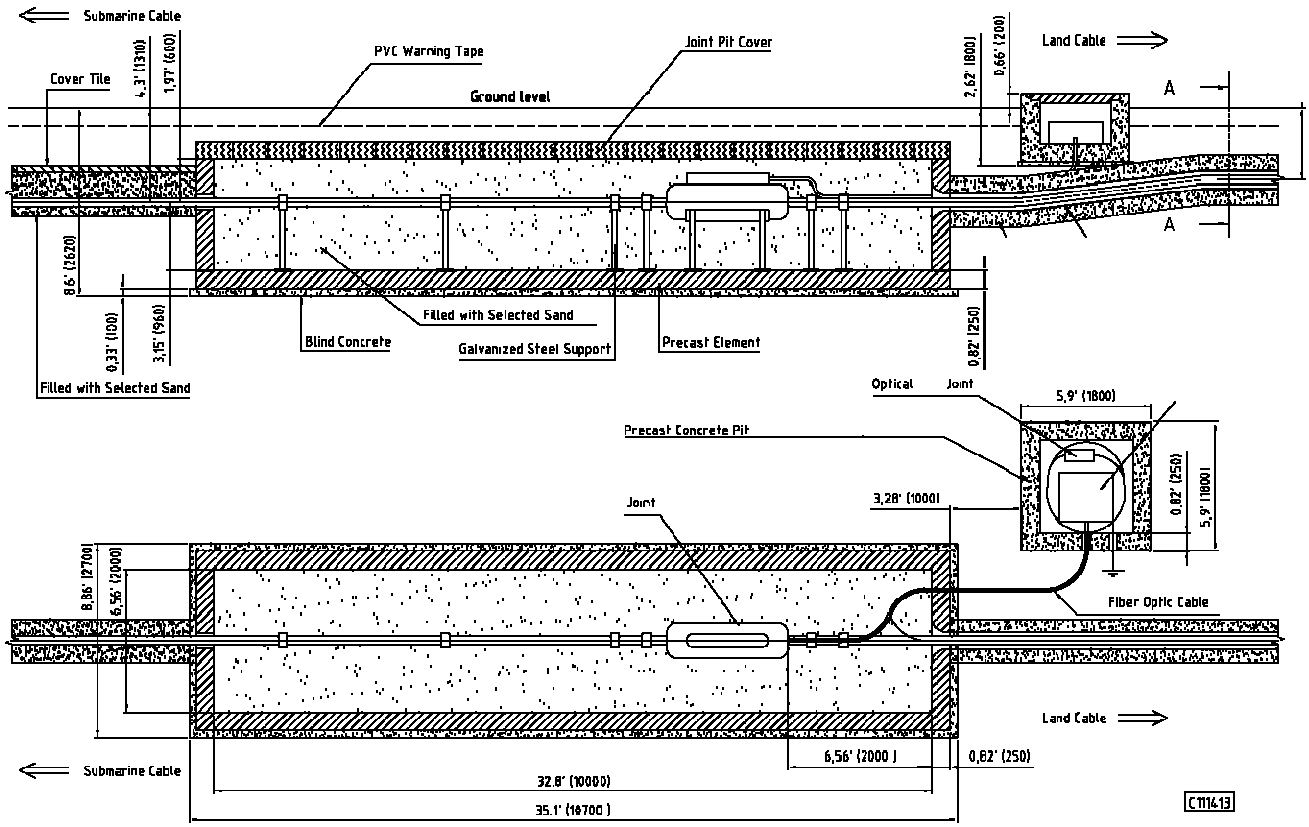

Designed	A WIRONEN
Drawn	DFW/TRC
Checked	.
Approved	.
Scale	NONE

No.	Revision	Date	By	Ck	PE	PE #
0	ISSUED FOR USE	12/30/11	TRC	TRC	.	.
1	ISSUED FOR PERMIT	02/20/12	TRC	TRC	.	.

Transmission Developers Inc.

Champlain Hudson Power Express Project

Champlain Hudson Power Express Inc.

TYPICAL SPLICE VAULT

176764-UM-35

Prepared by: HDR | DTA & TRC 12/19/2011

NAN-2009-01089
ATTACHMENT 6

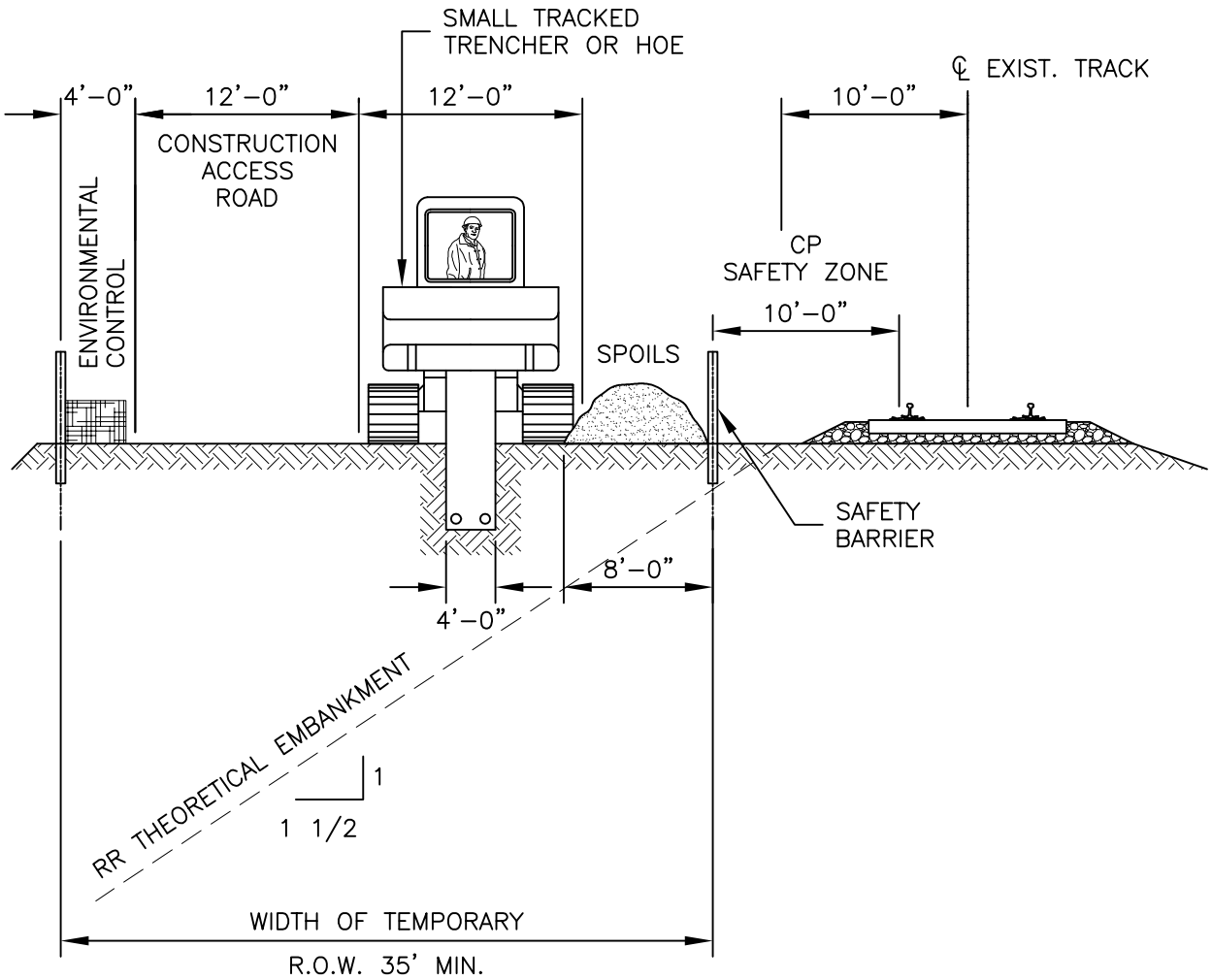

NOTE:

1. EXCAVATION SHALL BE SHORED OR SLOPED AS REQUIRED FOR OSHA COMPLIANCE. SLOPED EXCAVATION WILL REQUIRE INCREASED ROW.

2. CONTRACT STAGING AREAS WILL BE REQUIRED APPROXIMATELY EVERY 5 MILES. STAGING AREA SIZE IS ESTIMATED TO BE APPROXIMATELY 5 ACRES EACH.

3. WHERE ADEQUATE SPACE IS NOT AVAILABLE ALONG THE RR, THE CONTRACTOR WILL BE REQUIRED TO CAREFULLY PLAN HIS CONSTRUCTION OPERATIONS TO ENSURE ENVIRONMENTAL IMPACTS ARE MINIMIZED AND ALL WORK IS CONTAINED WITHIN THE APPROVED ROW.

4. SHORE ALL EXCAVATIONS WITHIN RR THEORICAL EMBANKMENT.

5. ABOVE SKETCH DEPICTS MINIMUM R.O.W. REQUIRED FOR CONVENTIONAL EXCAVATING AND TRENCHING PROCEDURES.

Designed	A WIRONEN
Drawn	JRP/TRC
Checked	.
Approved	.
Scale	NONE

No.	Revision	Date	By	Ck	PE	PE #
0	ISSUED FOR PERMIT	12/06/10	TRC	TRC	.	.
1	ISSUED FOR PERMIT	02/20/12	TRC	TRC	.	.

Transmission Developers Inc.

Champlain Hudson Power Express Project

Champlain Hudson Power Express Inc.

CP TEMPORARY CONSTRUCTION ROW

176764-UM-01

Prepared by: HDR DTA & TRC 12/06/2010

NAN-2009-01089
ATTACHMENT 6

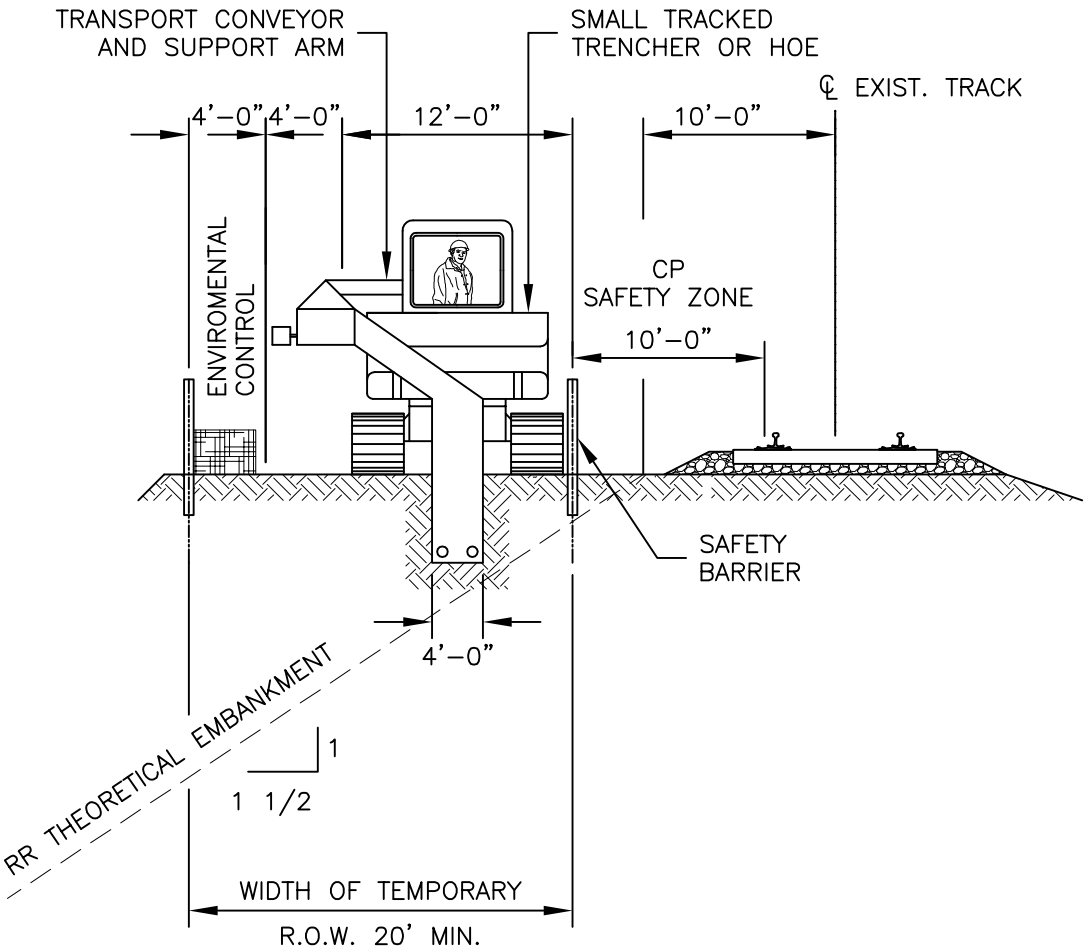

NOTE:

1. EXCAVATION SHALL BE SHORED OR SLOPED AS REQUIRED FOR OSHA COMPLIANCE. SLOPED EXCAVATION WILL REQUIRE INCREASED ROW.
2. CONTRACT STAGING AREAS WILL BE REQUIRED APPROXIMATELY EVERY 5 MILES. STAGING AREA SIZE IS ESTIMATED TO BE APPROXIMATELY 5 ACRES EACH.
3. WHERE ADEQUATE SPACE IS NOT AVAILABLE ALONG THE RR, THE CONTRACTOR WILL BE REQUIRED TO CAREFULLY PLAN HIS CONSTRUCTION OPERATIONS TO ENSURE ENVIRONMENTAL IMPACTS ARE MINIMIZED AND ALL WORK IS CONTAINED WITHIN THE APPROVED ROW.
4. SHORE ALL EXCAVATIONS WITHIN RR THEORETICAL EMBANKMENT.
5. ABOVE SKETCH DEPICTS MINIMUM R.O.W. REQUIRED FOR EMPLOYMENT OF IN–LINE TRENCHING OPERATIONS. THIS METHOD WILL ONLY BE UTILIZED ON A VERY LIMITED BASIS.

Designed	A WIRONEN
Drawn	JRP/TRC
Checked	.
Approved	.
Scale	NONE

No.	Revision	Date	By	Ck	PE	PE #
0	ISSUED FOR PERMIT	12/06/10	TRC	TRC	.	.
1	ISSUED FOR PERMIT	02/20/12	TRC	TRC	.	.

Transmission Developers Inc.

Champlain Hudson Power Express Project

Champlain Hudson Power Express Inc.

CP IN-LINE TRENCHER RIGHT OF WAY

176764-UM-02

Prepared by: HDR DTA & TRC 12/06/2010

NAN-2009-01089
ATTACHMENT 6

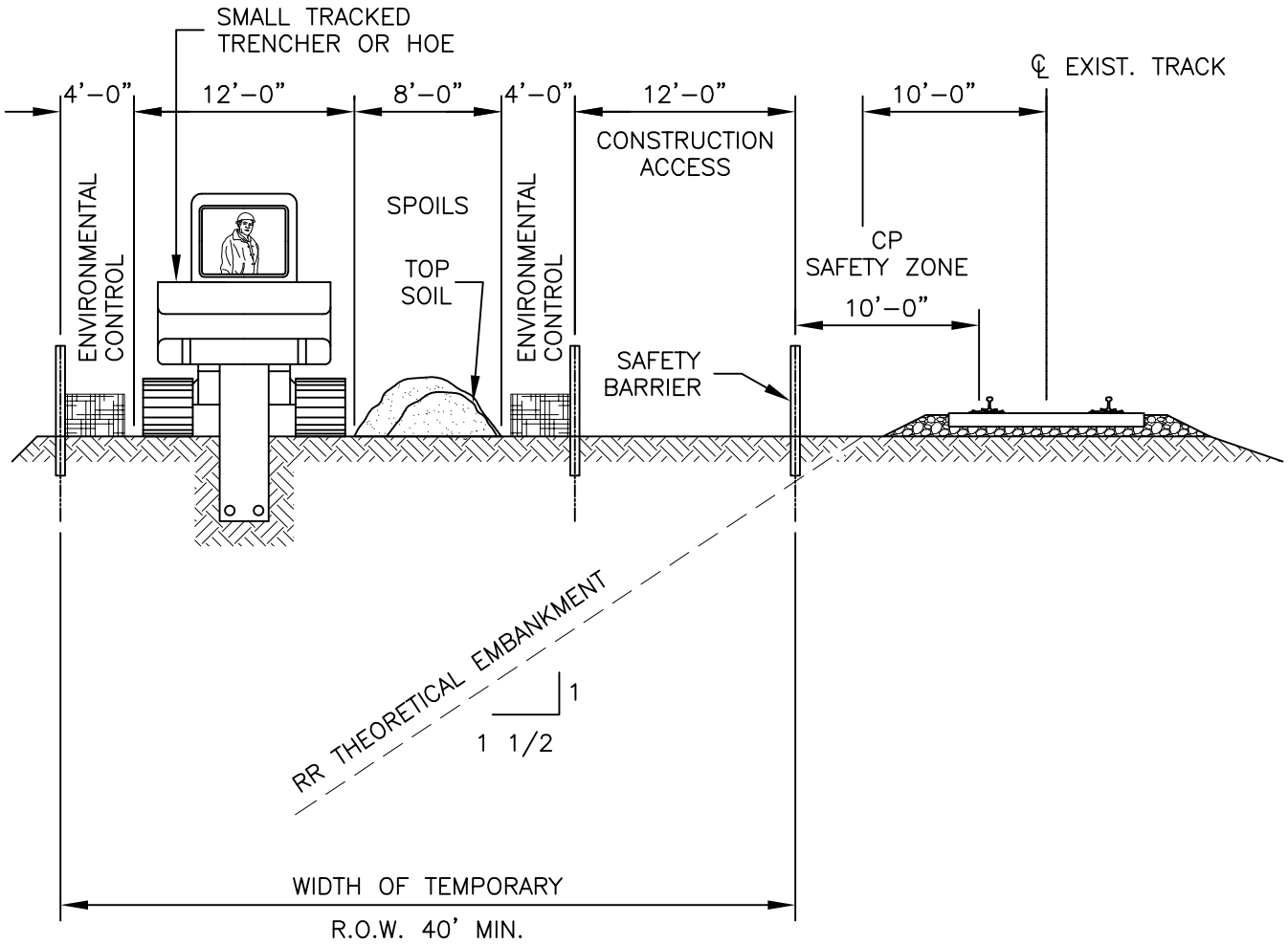

NOTE:

1. EXCAVATION SHALL BE SHORED OR SLOPED AS REQUIRED FOR OSHA COMPLIANCE. SLOPED EXCAVATION WILL REQUIRE INCREASED ROW.
2. CONTRACT STAGING AREAS WILL BE REQUIRED APPROXIMATELY EVERY 5 MILES. STAGING AREA SIZE IS ESTIMATED TO BE APPROXIMATELY 5 ACRES EACH.
3. WHERE ADEQUATE SPACE IS NOT AVAILABLE ALONG THE RR, THE CONTRACTOR WILL BE REQUIRED TO CAREFULLY PLAN HIS CONSTRUCTION OPERATIONS TO ENSURE ENVIRONMENTAL IMPACTS ARE MINIMIZED AND ALL WORK IS CONTAINED WITHIN THE APPROVED ROW.
4. SHORE ALL EXCAVATIONS WITHIN RR THEORICAL EMBANKMENT.
5. ABOVE SKETCH DEPICTS MINIMUM R.O.W. REQUIRED FOR CONVENTIONAL EXCAVATING AND TRENCHING PROCEDURES.

Designed	A WIRONEN
Drawn	JRP/TRC
Checked	.
Approved	.
Scale	NONE

No.	Revision	Date	By	Ck	PE	PE #
0	ISSUED FOR PERMIT	12/06/10	TRC	TRC	.	.
1	ISSUED FOR PERMIT	02/20/12	TRC	TRC	.	.

Transmission Developers Inc.

Champlain Hudson Power Express Project

Champlain Hudson Power Express Inc.

CP WIDE RIGHT OF WAY

176764-UM-03

Prepared by: HDR DTA & TRC 12/06/2010

NAN-2009-01089
ATTACHMENT 6

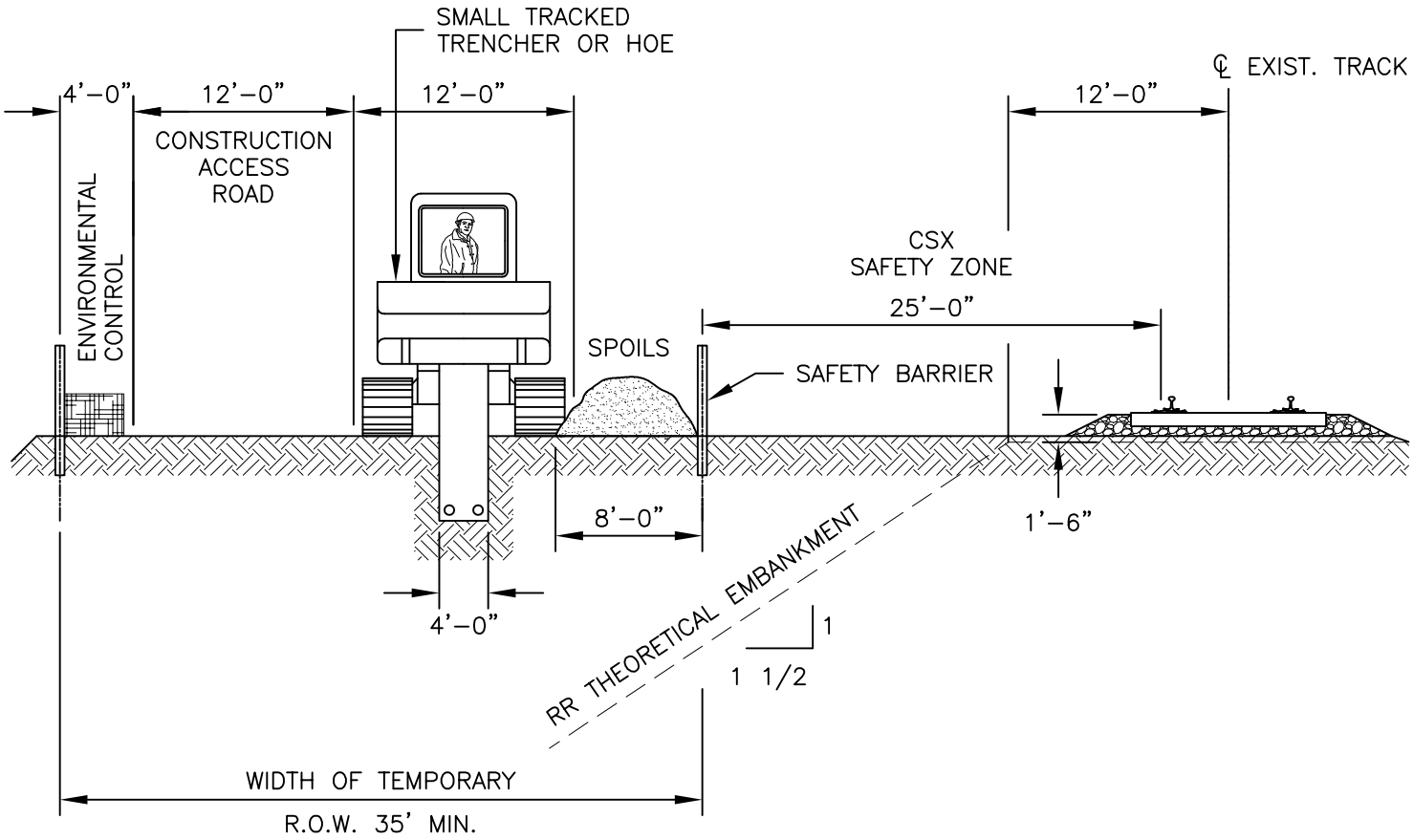

NOTE:

1. EXCAVATION SHALL BE SHORED OR SLOPED AS REQUIRED FOR OSHA COMPLIANCE. SLOPED EXCAVATION WILL REQUIRE INCREASED ROW.
2. CONTRACT STAGING AREAS WILL BE REQUIRED APPROXIMATELY EVERY 5 MILES. STAGING AREA SIZE IS ESTIMATED TO BE APPROXIMATELY 5 ACRES EACH.
3. WHERE ADEQUATE SPACE IS NOT AVAILABLE ALONG THE RR, THE CONTRACTOR WILL BE REQUIRED TO CAREFULLY PLAN HIS CONSTRUCTION OPERATIONS TO ENSURE ENVIRONMENTAL IMPACTS ARE MINIMIZED AND ALL WORK IS CONTAINED WITHIN THE APPROVED ROW.
4. SHORE ALL EXCAVATIONS WITHIN RR THEORICAL EMBANKMENT.
5. ABOVE SKETCH DEPICTS MINIMUM R.O.W. REQUIRED FOR CONVENTIONAL EXCAVATING AND TRENCHING PROCEDURES.

Designed	A WIRONEN
Drawn	DFW/TRC
Checked	.
Approved	.
Scale	NONE

No.	Revision	Date	By	Ck	PE	PE #
0	ISSUED FOR PERMIT	12/06/10	TRC	TRC	.	.
1	ISSUED FOR PERMIT	02/20/12	TRC	TRC	.	.

Transmission Developers Inc.

Champlain Hudson Power Express Project

Champlain Hudson Power Express Inc.

CSX TEMPORARY CONSTRUCTION ROW

176764-UM-04

Prepared by: HDR DTA & TRC 12/06/2010

NAN-2009-01089
ATTACHMENT 6

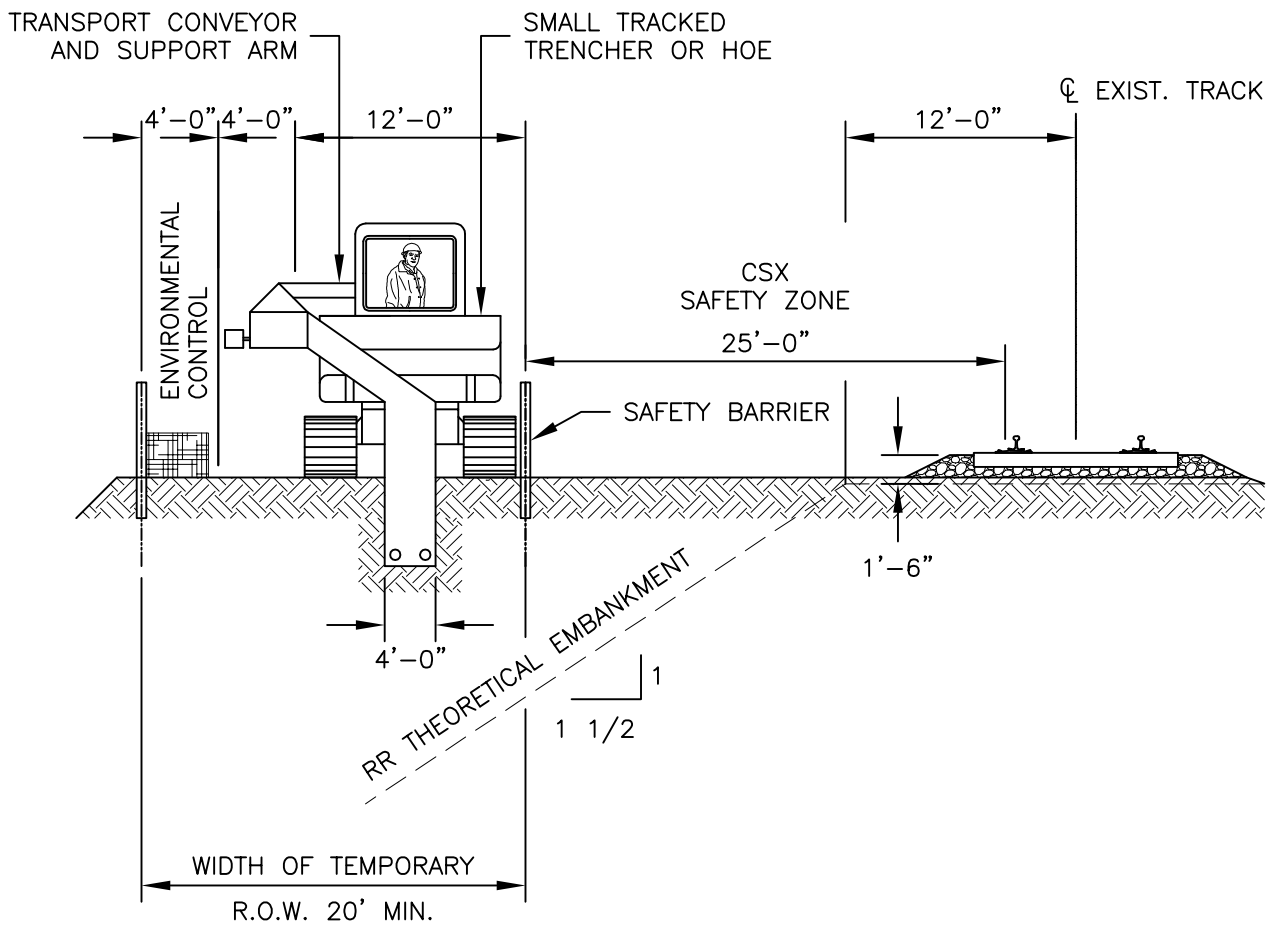

NOTE:

1. EXCAVATION SHALL BE SHORED OR SLOPED AS REQUIRED FOR OSHA COMPLIANCE. SLOPED EXCAVATION WILL REQUIRE INCREASED ROW.

2. CONTRACT STAGING AREAS WILL BE REQUIRED APPROXIMATELY EVERY 5 MILES. STAGING AREA SIZE IS ESTIMATED TO BE APPROXIMATELY 5 ACRES EACH.

3. WHERE ADEQUATE SPACE IS NOT AVAILABLE ALONG THE RR, THE CONTRACTOR WILL BE REQUIRED TO CAREFULLY PLAN HIS CONSTRUCTION OPERATIONS TO ENSURE ENVIRONMENTAL IMPACTS ARE MINIMIZED AND ALL WORK IS CONTAINED WITHIN THE APPROVED ROW.

4. SHORE ALL EXCAVATIONS WITHIN RR THEORICAL EMBANKMENT.

5. ABOVE SKETCH DEPICTS MINIMUM R.O.W. REQUIRED FOR EMPLOYMENT OF IN–LINE TRENCHING OPERATIONS. THIS METHOD WILL ONLY BE UTILIZED ON A VERY LIMITED BASIS.

Designed	A WIRONEN
Drawn	JRP/TRC
Checked	.
Approved	.
Scale	NONE

No.	Revision	Date	By	Ck	PE	PE #
0	ISSUED FOR PERMIT	12/06/10	TRC	TRC	.	.
1	ISSUED FOR PERMIT	02/20/12	TRC	TRC	.	.

Transmission Development Inc.

Champlain Hudson Power Express Project

Champlain Hudson Power Express Inc.

CSX IN-LINE TRENCHER RIGHT OF WAY

176764-UM-05

Prepared by: HDR DTA & TRC 12/06/2010

NAN-2009-01089
ATTACHMENT 6

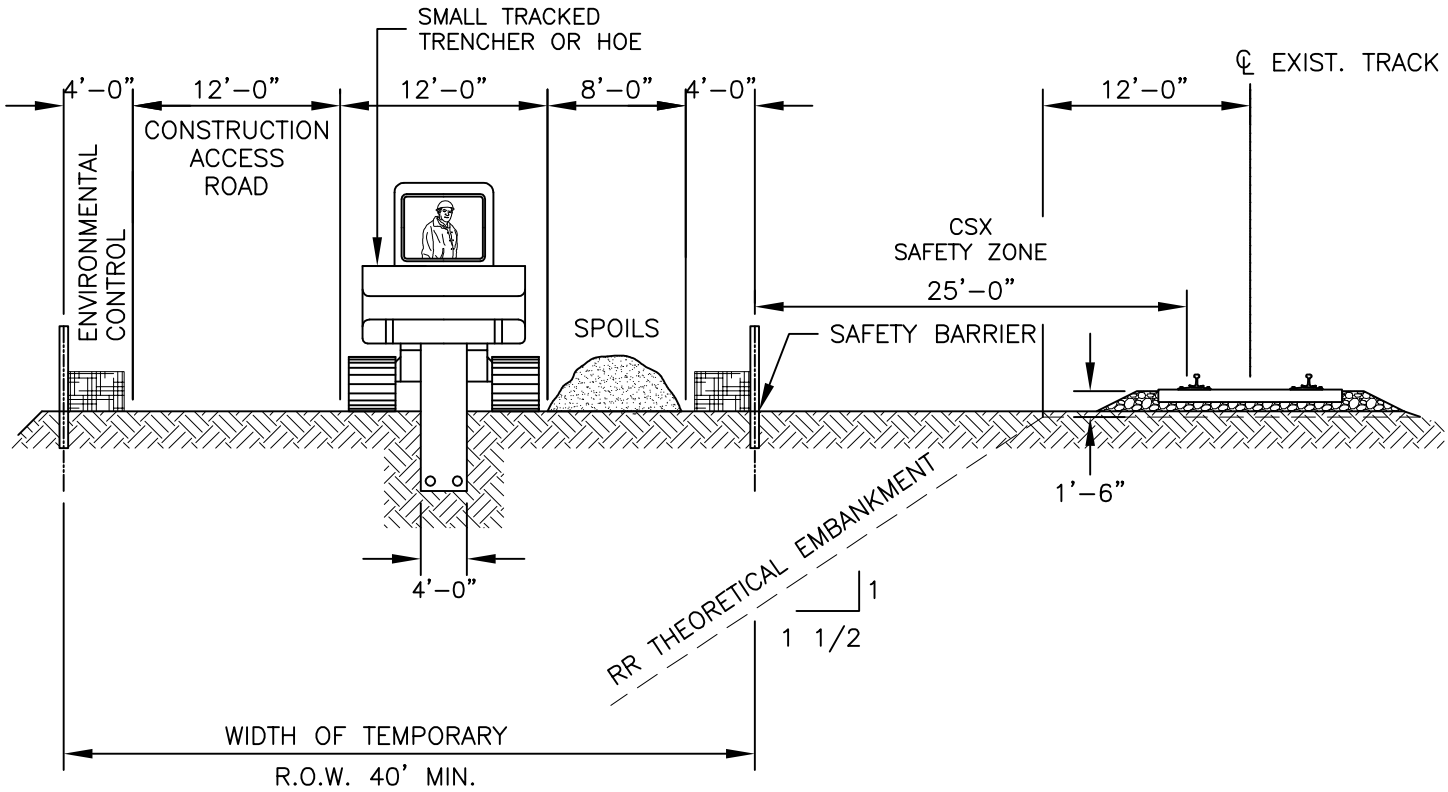

NOTE:

1. EXCAVATION SHALL BE SHORED OR SLOPED AS REQUIRED FOR OSHA COMPLIANCE. SLOPED EXCAVATION WILL REQUIRE INCREASED ROW.
2. CONTRACT STAGING AREAS WILL BE REQUIRED APPROXIMATELY EVERY 5 MILES. STAGING AREA SIZE IS ESTIMATED TO BE APPROXIMATELY 5 ACRES EACH.
3. WHERE ADEQUATE SPACE IS NOT AVAILABLE ALONG THE RR, THE CONTRACTOR WILL BE REQUIRED TO CAREFULLY PLAN HIS CONSTRUCTION OPERATIONS TO ENSURE ENVIRONMENTAL IMPACTS ARE MINIMIZED AND ALL WORK IS CONTAINED WITHIN THE APPROVED ROW.
4. SHORE ALL EXCAVATIONS WITHIN RR THEORICAL EMBANKMENT.
5. ABOVE SKETCH DEPICTS MINIMUM R.O.W. REQUIRED FOR CONVENTIONAL EXCAVATING AND TRENCHING PROCEDURES.

Designed	A WIRONEN
Drawn	JRP/TRC
Checked	.
Approved	.
Scale	NONE

No.	Revision	Date	By	Ck	PE	PE #
0	ISSUED FOR PERMIT	12/06/10	TRC	TRC	.	.
1	ISSUED FOR PERMIT	02/20/12	TRC	TRC	.	.

Transmission Developers Inc.

Champlain Hudson Power Express Project

Champlain Hudson Power Express Inc.

CSX WIDE RIGHT OF WAY

176764-UM-06

Prepared by: HDR DTA & TRC 12/06/2010

NAN-2009-01089
ATTACHMENT 6

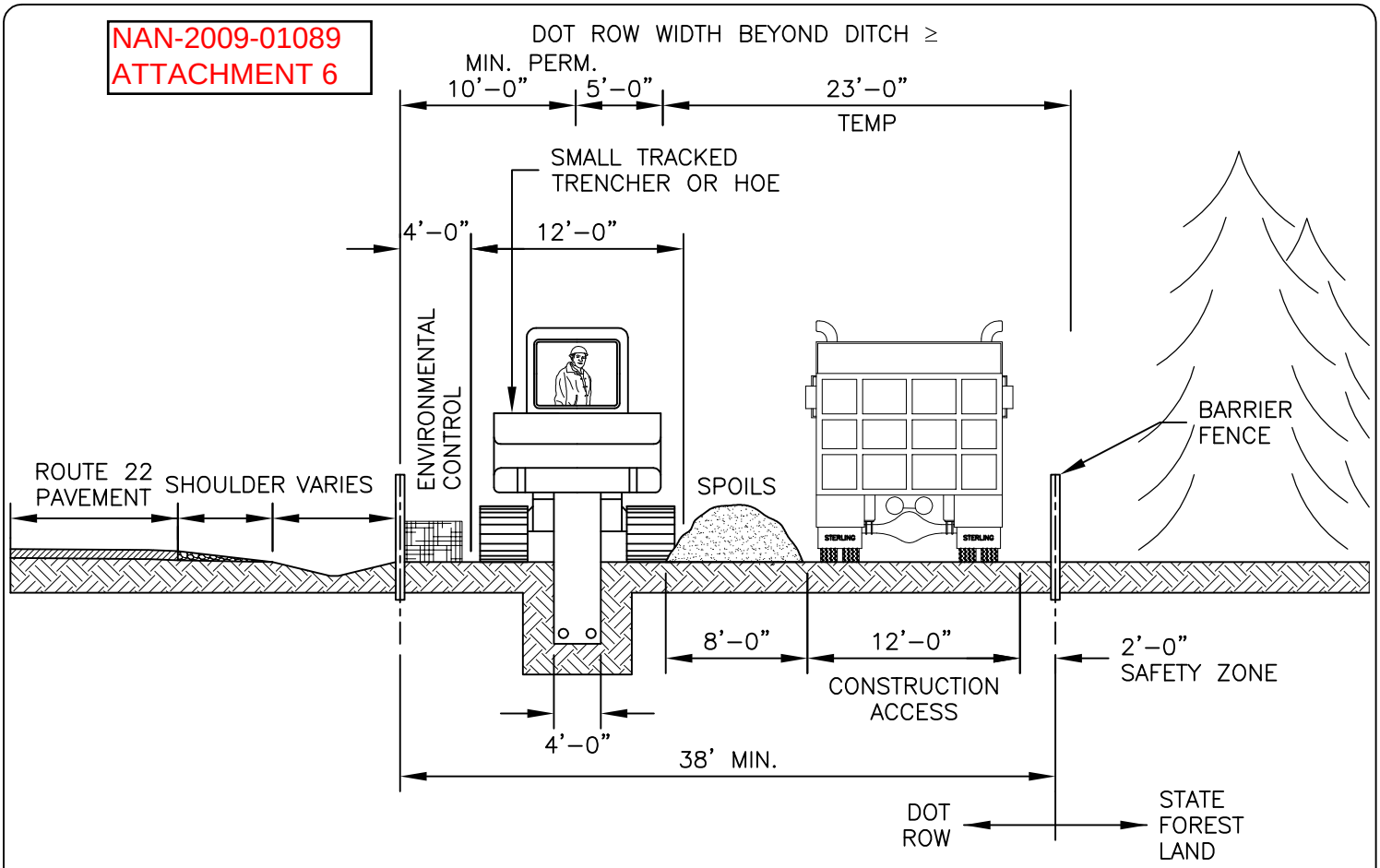

NOTES:

1. SKETCH DEPICTS MIN R.O.W WIDTH REQUIRED WHERE USE OF STATE ROAD FOR CONSTRUCTION ACCESS AND MATERIAL STAGING IS NOT PERMITTED.

2. CONVENTIONAL TRENCHING OPERATION USING TRACKED HOE OR TRENCHER IS DEPICTED.

Designed	A WIRONEN
Drawn	JRP/TRC
Checked	.
Approved	.
Scale	NONE

No.	Revision	Date	By	Ck	PE	PE #
0	ISSUED FOR REVIEW	02/22/11	TRC	TRC	.	.
1	ISSUED FOR REVIEW	02/16/12	TRC	TRC	.	.
2	ISSUED FOR PERMIT	02/20/12	TRC	TRC	.	.

Transmission Developers Inc.

Champlain Hudson Power Express Project

Champlain Hudson Power Express Inc.

RT 22
OPEN TRAVEL LANE

176764-RT22-01A

Prepared by: HDR DTA & TRC 02/03/2011

NAN-2009-01089
ATTACHMENT 6

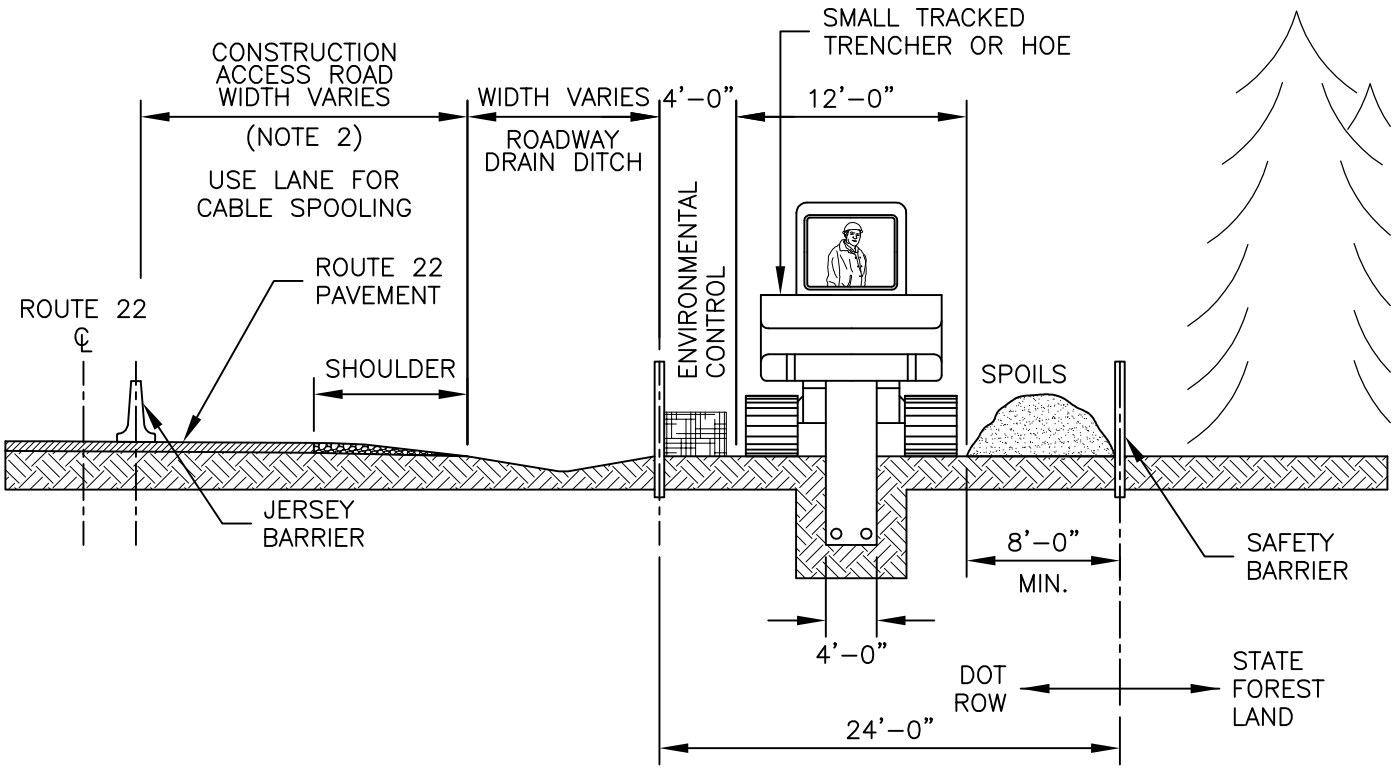

NOTES:

1. CROSS SECTION ASSUMES SUFFICIENT DOT ROW WIDTH TO PERMIT HVDC CABLE INSTALLATION OUTSIDE OF ROAD DITCH LINE.
2. MIN. CONSTRUCTION ACCESS ROAD WIDTH OF 12 FT. REQUIRED.
3. CROSS SECTION ASSUMES CONSTRUCTION VEHICLES PERMITTED TO UTILIZE ONE LANE OF ROUTE 22 FOR WORK SITE ACCESS AND MATERIAL STORAGE.
4. ABOVE SKETCH DEPICTS CONVENTIONAL TRENCHING OPERATION WHERE USE OF STATE ROAD IS PERMITTED FOR CONSTRUCTION ACCESS AND STAGING.

Designed	A WIRONEN
Drawn	JRP/TRC
Checked	.
Approved	.
Scale	NONE

No.	Revision	Date	By	Ck	PE	PE #
0	ISSUED FOR REVIEW	02/22/11	TRC	TRC	.	.
1	ISSUED FOR REVIEW	02/16/12	TRC	TRC	.	.
2	ISSUED FOR PERMIT	02/20/12	TRC	TRC	.	.

Transmission Developers Inc.

Champlain Hudson Power Express Project

Champlain Hudson Power Express Inc.

RT 22
CLOSED TRAVEL LANE

176764-RT22-01C

Prepared by: HDR DTA & TRC 02/03/2011

NAN-2009-01089
ATTACHMENT 6

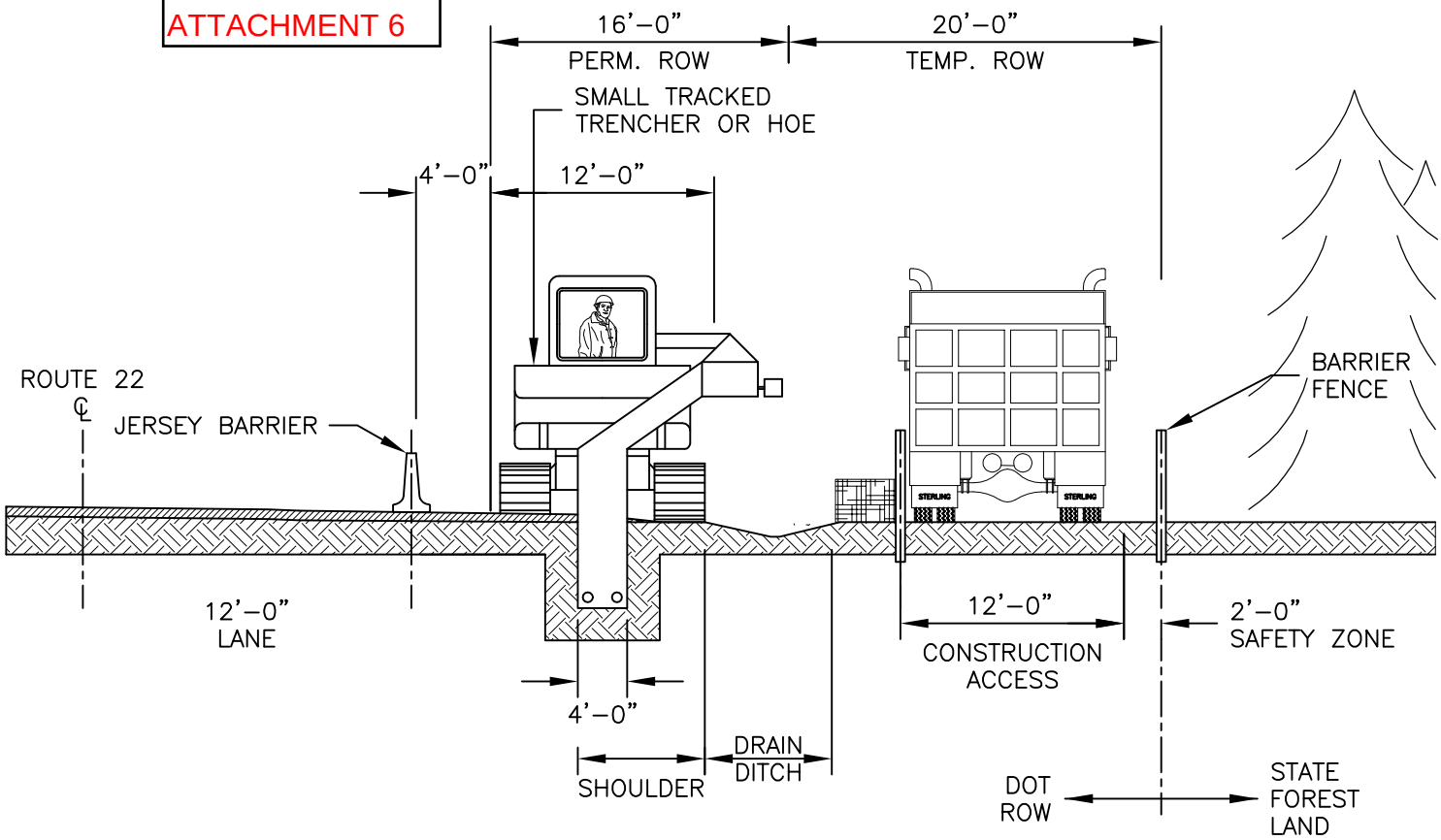

NOTES:

1. ABOVE SCENARIO CAN ONLY BE EMPLOYED WHERE ROAD DRAINAGE DITCH IS SHALLOW OR NON–EXISTENT.
2. ABOVE SKETCH DEPICTS IN–LINE TRENCHING METHODS WHICH CAN ONLY BE USED OVER SHORT DISTANCES WITH LIMITED ACCESS.
3. ABOVE SKETCH DEPICTS MINIMUM CONSTRUCTION ROW REQUIRED FOR IN–LINE CONSTRUCTION WHERE NO USE OF STATE ROADWAY, IS PERMITTED BUT ROW IS SUFFICIENT FOR CONSTRUCTION ACCESS.
4. PROVIDE EROSION CONTROLS AND BARRIERS WITHIN DRAINAGE DITCH AS REQUIRED TO MANAGE RUNOFF.

Designed	A WIRONEN
Drawn	JRP/TRC
Checked	.
Approved	.
Scale	NONE

No.	Revision	Date	By	Ck	PE	PE #
0	ISSUED FOR REVIEW	02/22/11	TRC	TRC	.	.
1	ISSUED FOR REVIEW	02/16/12	TRC	TRC	.	.
2	ISSUED FOR PERMIT	02/20/12	TRC	TRC	.	.

Transmission Developers Inc.

Champlain Hudson Power Express Project

Champlain Hudson Power Express Inc.

RT 22 IN-LINE TRENCHING IN SHOULDER

176764-RT22-01D

Prepared by: HDR DTA & TRC 02/21/2011

NAN-2009-01089-EYA
ATTACHMENT 6

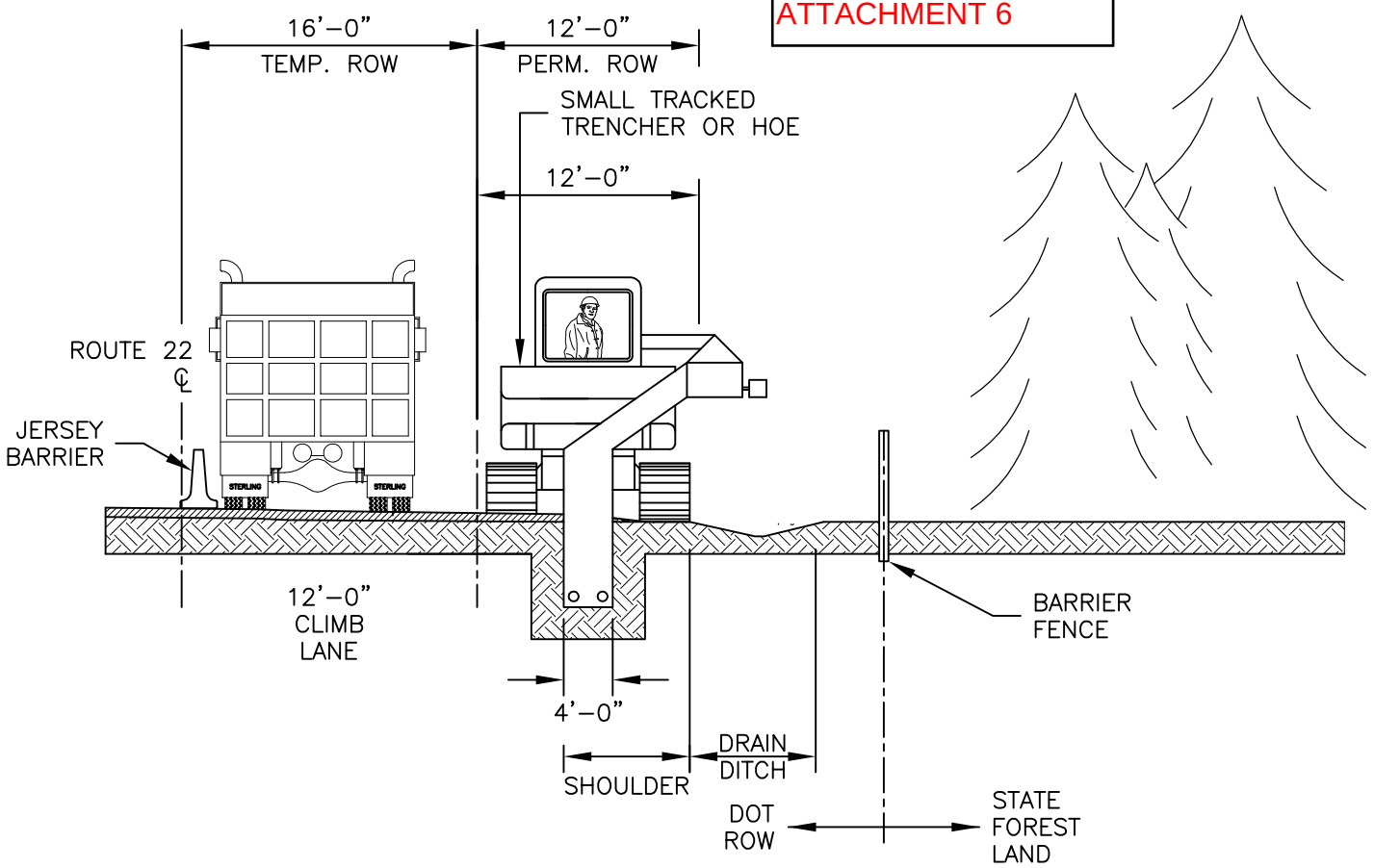

NOTES:

1. ABOVE SCENARIO CAN ONLY BE EMPLOYED WHERE ROAD DRAINAGE DITCH IS SHALLOW OR NON–EXISTENT.
2. ABOVE SKETCH DEPICTS IN–LINE TRENCHING METHODS WHICH CAN ONLY BE USED OVER SHORT DISTANCES WITH LIMITED ACCESS.
3. ABOVE SKETCH DEPICTS MINIMUM CONSTRUCTION ROW REQUIRED FOR IN–LINE CONSTRUCTION AT LOCATIONS WITH LIMITED DOT ROW, BUT USE OF STATE ROADWAY IS PERMITTED.
4. PROVIDE EROSION CONTROLS AND BARRIERS WITHIN DRAINAGE DITCH AS REQUIRED TO MANAGE RUNOFF.

Designed	A WIRONEN
Drawn	JRP/TRC
Checked	.
Approved	.
Scale	NONE

No.	Revision	Date	By	Ck	PE	PE #
0	ISSUED FOR REVIEW	02/22/11	TRC	TRC	.	.
1	ISSUED FOR REVIEW	02/16/12	TRC	TRC	.	.
2	ISSUED FOR PERMIT	02/20/12	TRC	TRC	.	.

Transmission Developers Inc

Champlain Hudson Power Express Project

Champlain Hudson Power Express Inc.

RT 22 IN-LINE TRENCHING IN SHOULDER CLIMBING LN.

176764-RT22-01E

Prepared by: HDR | DTA & TRC 02/21/2011

NAN-2009-01089-EYA
ATTACHMENT 6

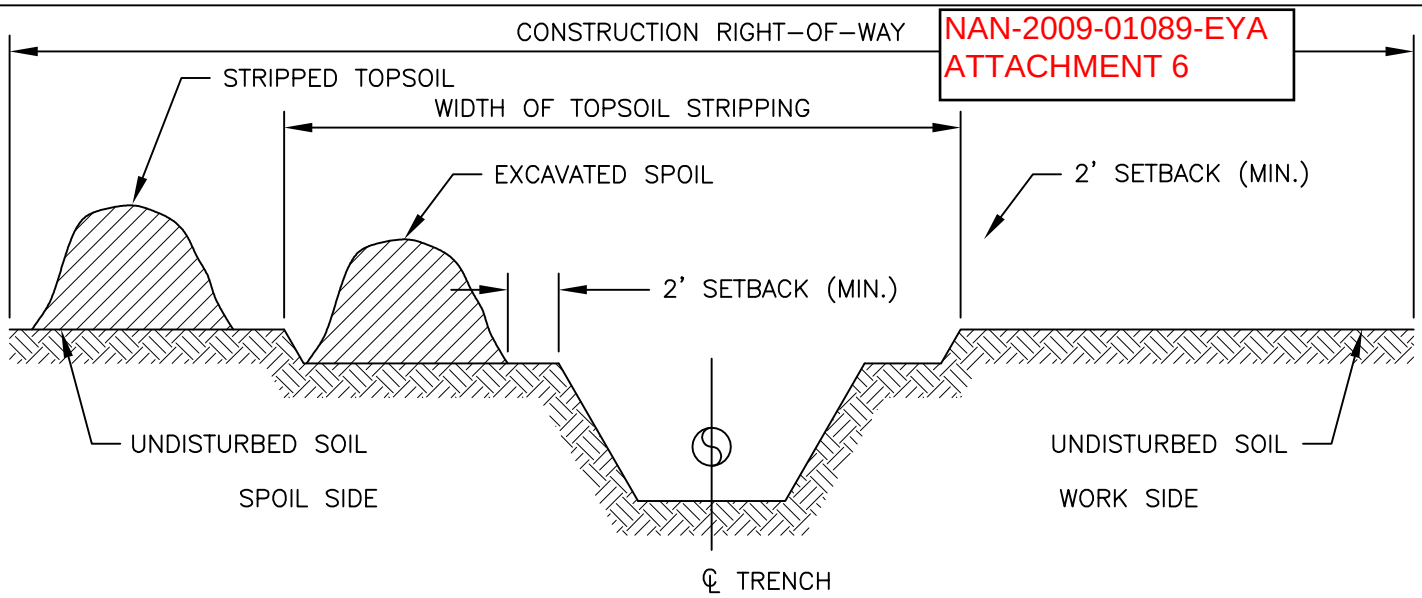

DITCH PLUS SPOILSIDE TOPSOIL SEGREGATION

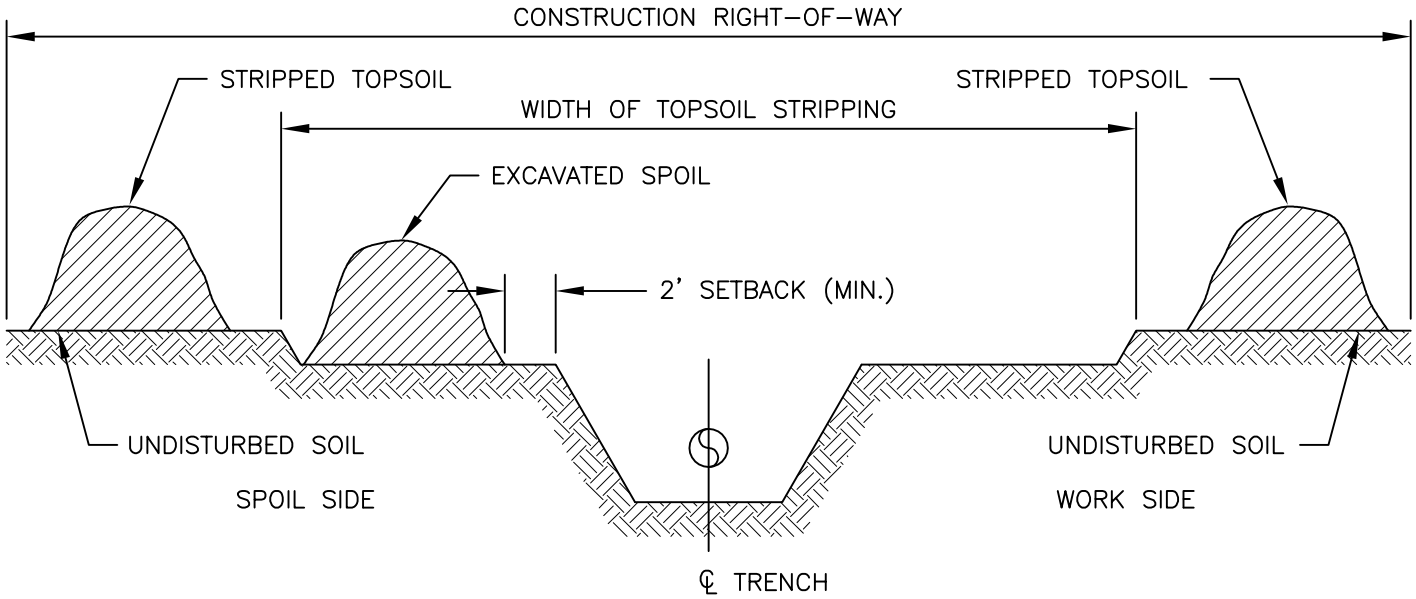

FULL RIGHT–OF–WAY TOPSOIL STRIPPING

NOTES:

1. TOPSOIL MAY BE STORED IN LOCATIONS AS SHOWN ABOVE, OR AT OTHER COMPANY APPROVED LOCATIONS WITHIN THE CONSTRUCTION R.O.W.
2. LEAVE GAPS IN SPOIL PILES FOR WATER RUN–OFF.
3. CONSTRUCTION R.O.W. MAY BE EXPANDED UP TO FULL R.O.W. WIDTH IN NON WETLAND AREAS, FOR TOPSOIL SALVAGE.

Designed	A WIRONEN
Drawn	JRP/TRC
Checked	.
Approved	.
Scale	NONE

No.	Revision	Date	By	Ck	PE	PE #
0	ISSUED FOR PERMIT	12/06/10	TRC	TRC	.	.
2	ISSUED FOR PERMIT	02/20/12	TRC	TRC	.	.

Transmission Developers Inc.

Champlain Hudson Power Express Project

Champlain Hudson Power Express Inc.

ROW TOPSOIL SEGREGATION TECHNIQUES

176764-UM-07

Prepared by: HDR | DTA & TRC 12/06/2010

NAN-2009-01089-EYA
ATTACHMENT 6

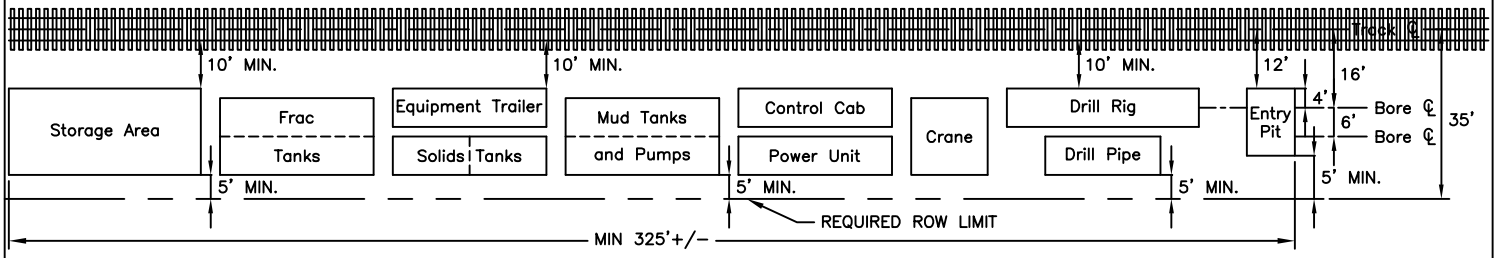

TYPICAL HDD LAYOUT ON CP ROW
BI-POLE (2 CABLES) ONE SIDE OF TRACK

Designed	WJL
Drawn	WJL
Checked	CRP
Approved	LEP
Scale	NTS

No.	Revision	Date	By	Ck	PE	PE #
0	ISSUED FOR PERMIT	12/06/10	TRC	TRC		
1	ISSUED FOR PERMIT	02/20/12	TRC	TRC		

Transmission Developers Inc.

Champlain Hudson Power Express Project

Champlain Hudson Power Express Inc.

HDD LAYOUT CP RIGHT OF WAY

176764-HDDM-01

Prepared by: HDR | DTA & TRC 12/06/2010

NAN-2009-01089-EYA
ATTACHMENT 6

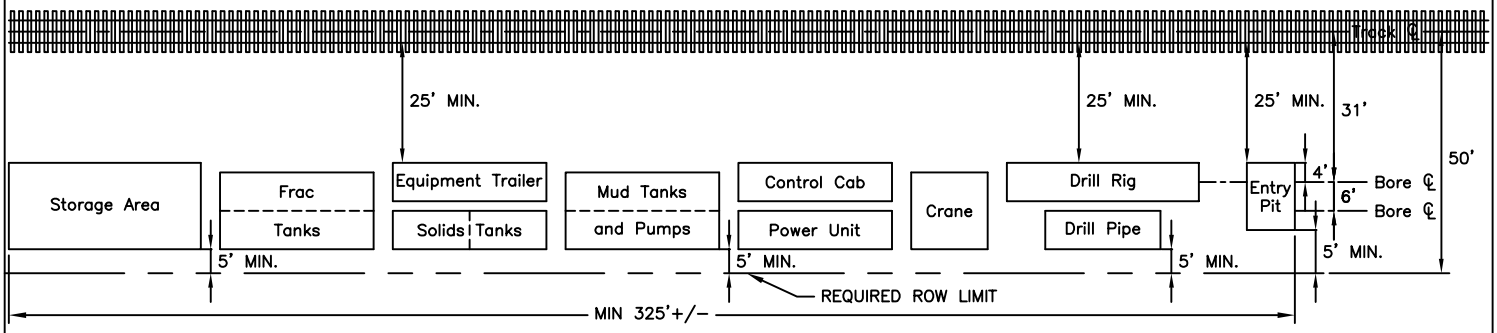

TYPICAL HDD LAYOUT ON CSX ROW
BI-POLE (2 CABLES) ONE SIDE OF TRACK

Designed	WJL
Drawn	WJL
Checked	CRP
Approved	LEP
Scale	NTS

No.	Revision	Date	By	Ck	PE	PE #
0	ISSUED FOR PERMIT	12/06/10	TRC	TRC		
1	ISSUED FOR PERMIT	02/20/12	TRC	TRC		

Transmission Developers Inc.

Champlain Hudson Power Express Project

Champlain Hudson Power Express Inc.

HDD LAYOUT CSX RIGHT OF WAY

176764-HDDM-02

Prepared by: HDR | DTA & TRC 12/06/2010

NAN-2009-01089-EYA
ATTACHMENT 6

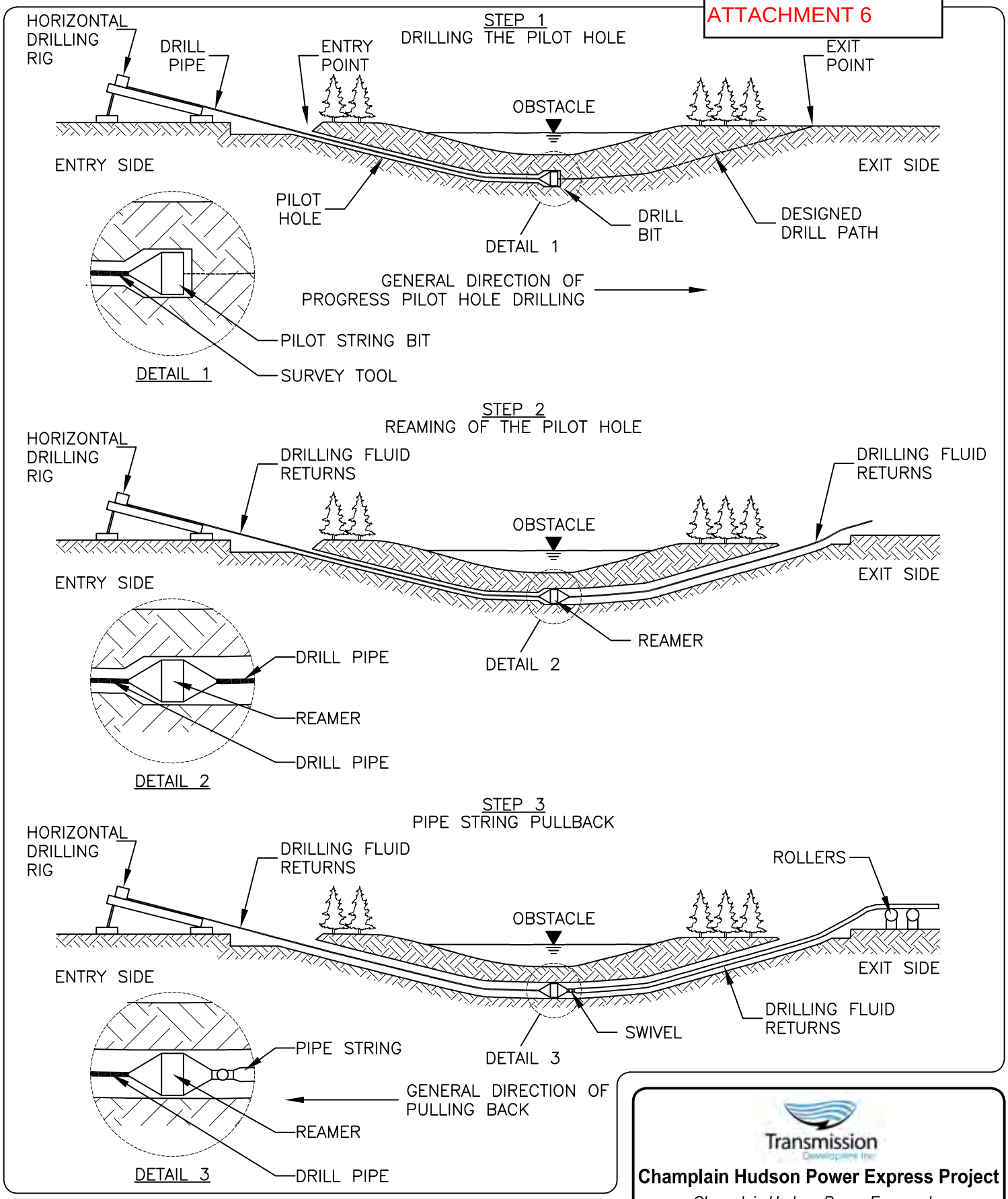

Designed	A WIRONEN
Drawn	JJD/TRC
Checked	.
Approved	.
Scale	NONE

No.	Revision	Date	By	Ck	PE	PE #
0	ISSUED FOR PERMIT	12/06/10	TRC	TRC	.	.
1	ISSUED FOR PERMIT	02/20/12	TRC	TRC	.	.

Transmission Developers Inc.

Champlain Hudson Power Express Project

Champlain Hudson Power Express Inc.

HDD
MULTI-STAGE PROCESS

176764-HDDM-03

Prepared by: HDR & TRC 12/06/2010

NAN-2009-01089-EYA
ATTACHMENT 6

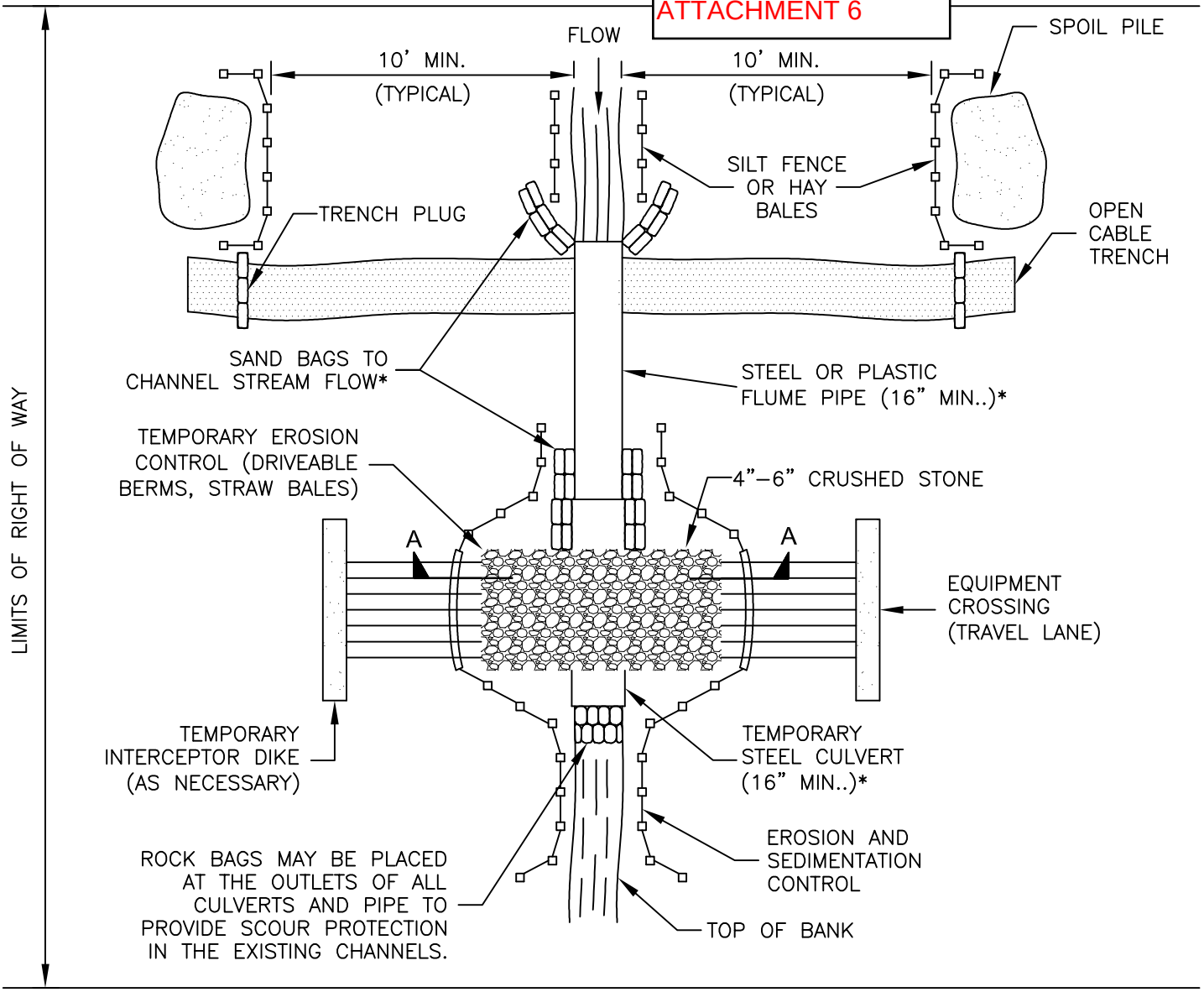

PLAN VIEW

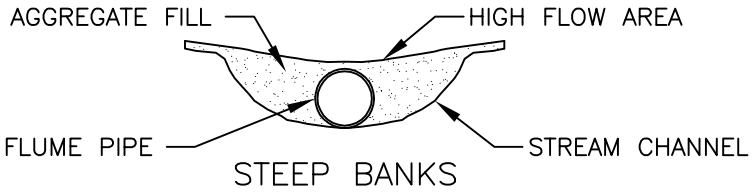

SECTION A–A

* IF WELDED PIPE IS USED SAND BAGS AT JOINTS NOT REQUIRED. ACTUAL NUMBERS OF FLUMES AND CULVERT PIPE REQUIRED TO BE DETERMINED BY STREAM WIDTH.

Designed	A WIRONEN
Drawn	JRP/TRC
Checked	.
Approved	.
Scale	NONE

No.	Revision	Date	By	Ck	PE	PE #
0	ISSUED FOR PERMIT	12/06/10	TRC	TRC	.	.
1	ISSUED FOR PERMIT	02/20/12	TRC	TRC	.	.

Transmission Developers Inc.

Champlain Hudson Power Express Project

Champlain Hudson Power Express Inc.

TYPICAL FLUMED CROSSING

176764-UM-13

Prepared by: HDR | DTA & TRC 12/06/2010

NAN-2009-01089-EYA
ATTACHMENT 6

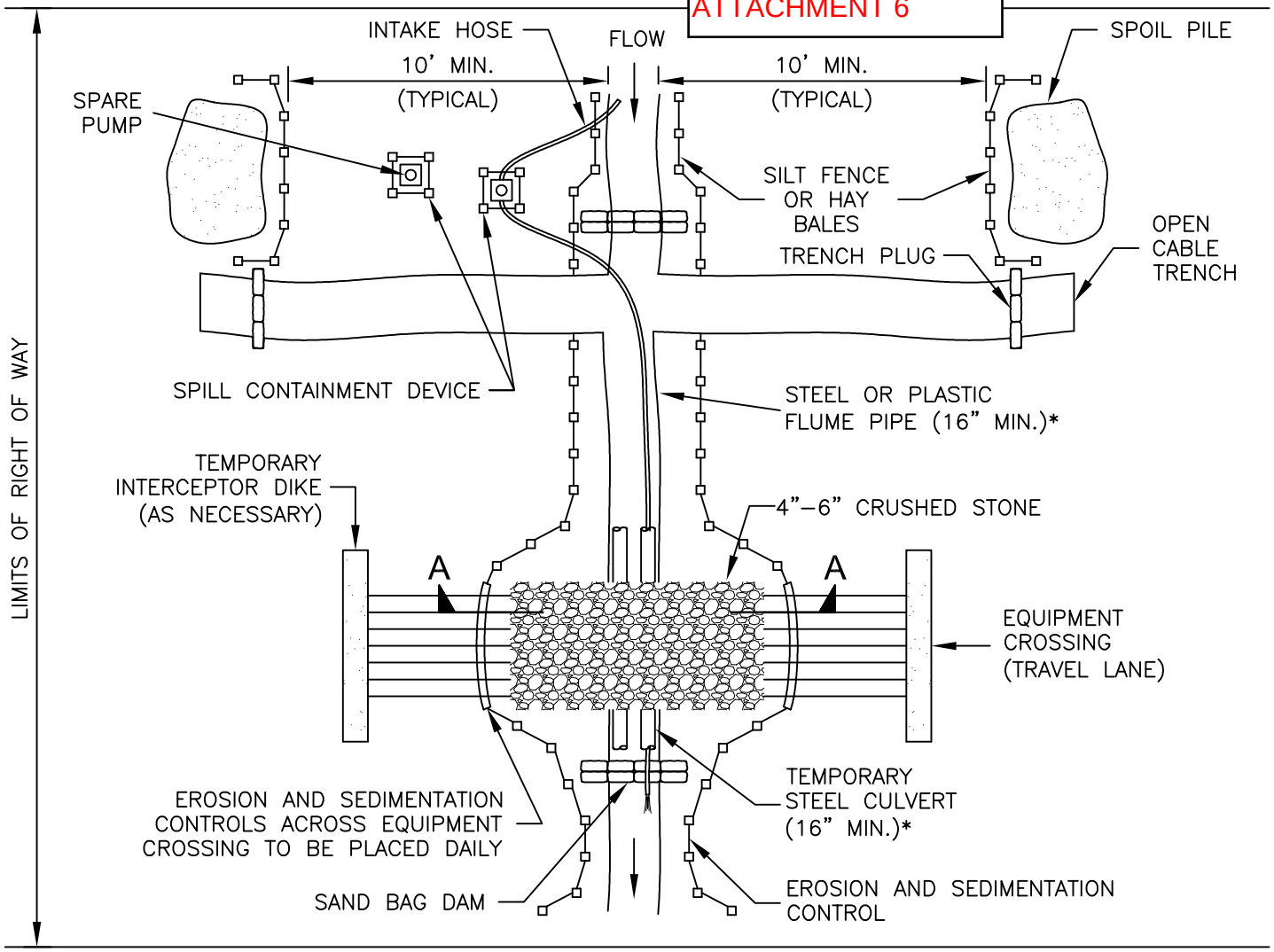

PLAN VIEW

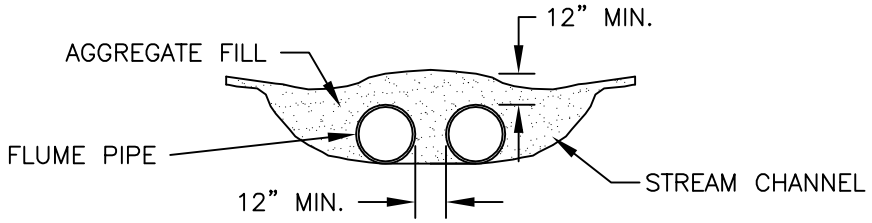

SECTION A–A

NOTES:
1. EXCAVATE ACROSS STREAM CHANNEL FOLLOWING WATER RE–ROUTING.
2. LOWER PIPE UNDER HOSE AND BACKFILL.
3. MONITOR PUMPS AT ALL TIMES DURING STREAM CROSSING PROCEDURE.
4. REMOVE SILT FENCE/HAY BALES ACROSS EQUIPMENT CROSSING AS NEEDED FOR ACCESS, AND REPLACE AT THE END OF EACH DAY.
5. NUMBER OF FLUME PIPES WILL VARY DEPENDING ON SITE CONDITIONS.

Designed	A WIRONEN
Drawn	JRP/TRC
Checked	.
Approved	.
Scale	NONE

No.	Revision	Date	By	Ck	PE	PE #
0	ISSUED FOR PERMIT	12/06/10	TRC	TRC	.	.
1	ISSUED FOR PERMIT	02/20/12	TRC	TRC	.	.

Transmission Developers Inc.

Champlain Hudson Power Express Project

Champlain Hudson Power Express Inc.

TYPICAL DAM AND PUMP STREAM CROSSING

176764-UM-14

Prepared by: HDR | DTA & TRC 12/06/2010

NAN-2009-01089-EYA
ATTACHMENT 6

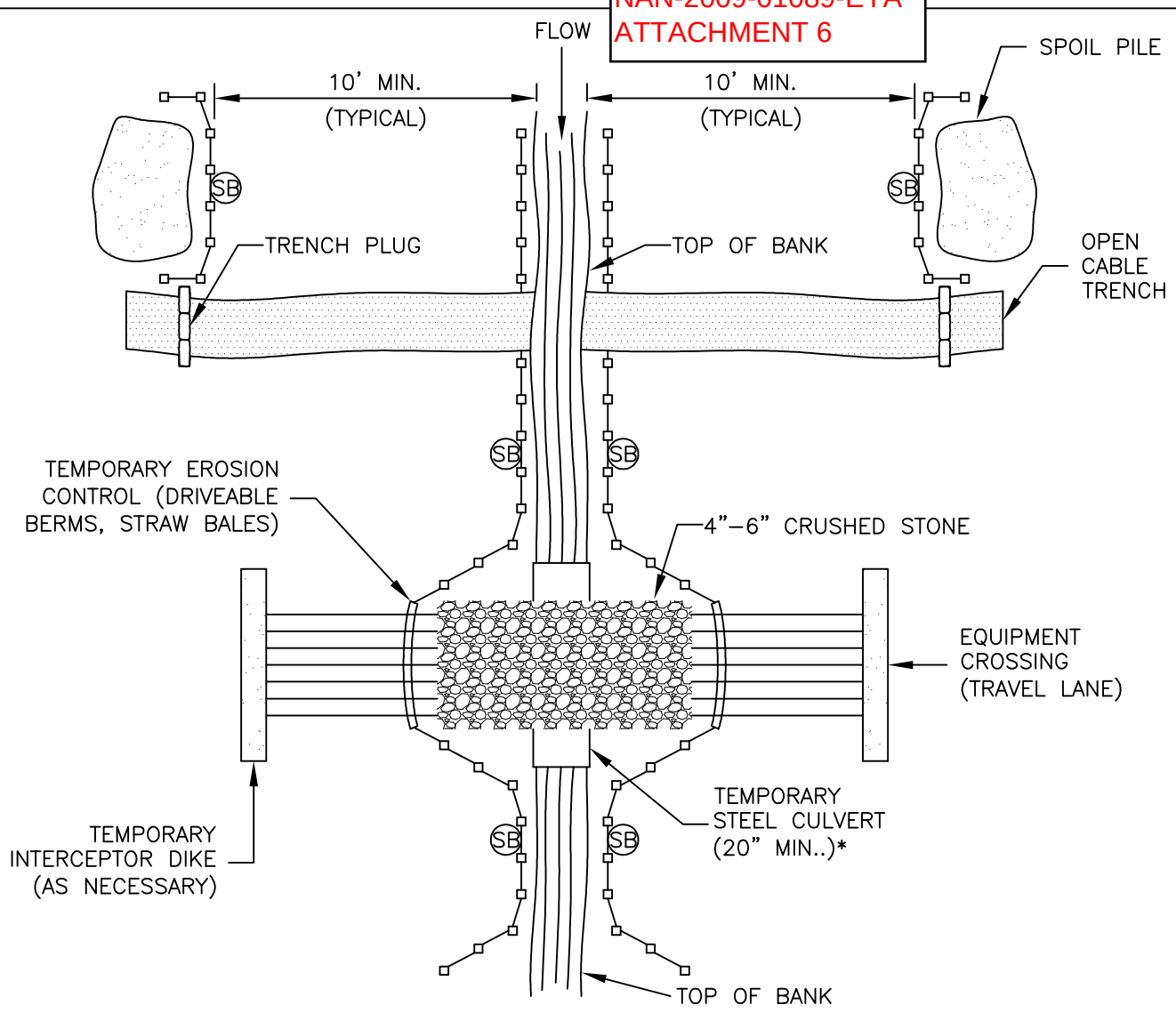

NOTES:

1. SB TEMPORARY SEDIMENT BARRIER OF SILT FENCE AND/OR STRAW BALES, OR APPROPRIATE MATERIALS.
2. FOR MINOR WATERBODIES, COMPLETE TRENCHING AND BACKFILL IN THE WATERBODY (NOT INCLUDING BLASTING OR OTHER ROCK BREAKING MEASURES) WITHIN 24 CONTINUOUS HOURS. IF A FLUME IS INSTALLED WITHIN THE WATERBODY DURING MAINLINE ACTIVITIES, IT CAN BE REMOVED JUST PRIOR TO LOWERING IN THE CABLE OR CONDUIT. THE 24–HOUR TIMEFRAME STARTS AS SOON AS THE FLUME IS REMOVED.
3. FOR INTERMEDIATE WATERBODIES, COMPLETE TRENCHING AND BACKFILLING IN THE WATERBODY (NOT INCLUDING BLASTING OR OTHER ROCK BREAKING MEASURES) WITHIN 48 CONTINUOUS HOURS, IF FEASIBLE.

* ACTUAL NUMBERS OF FLUMES AND CULVERT PIPE REQUIRED TO BE DETERMINED BY STREAM WIDTH.

Transmission Developers Inc.

Champlain Hudson Power Express Project

Champlain Hudson Power Express Inc.

TYP. OPEN CUT STREAM CROSSING

176764-UM-15

Prepared by: HDR | DTA & TRC 12/06/2010

Designed	A WIRONEN
Drawn	JRP/TRC
Checked	.
Approved	.
Scale	NONE

No.	Revision	Date	By	Ck	PE	PE #
0	ISSUED FOR PERMIT	12/06/10	TRC	TRC	.	.
1	ISSUED FOR PERMIT	02/20/12	TRC	TRC	.	.

NAN-2009-01089-EYA
ATTACHMENT 6

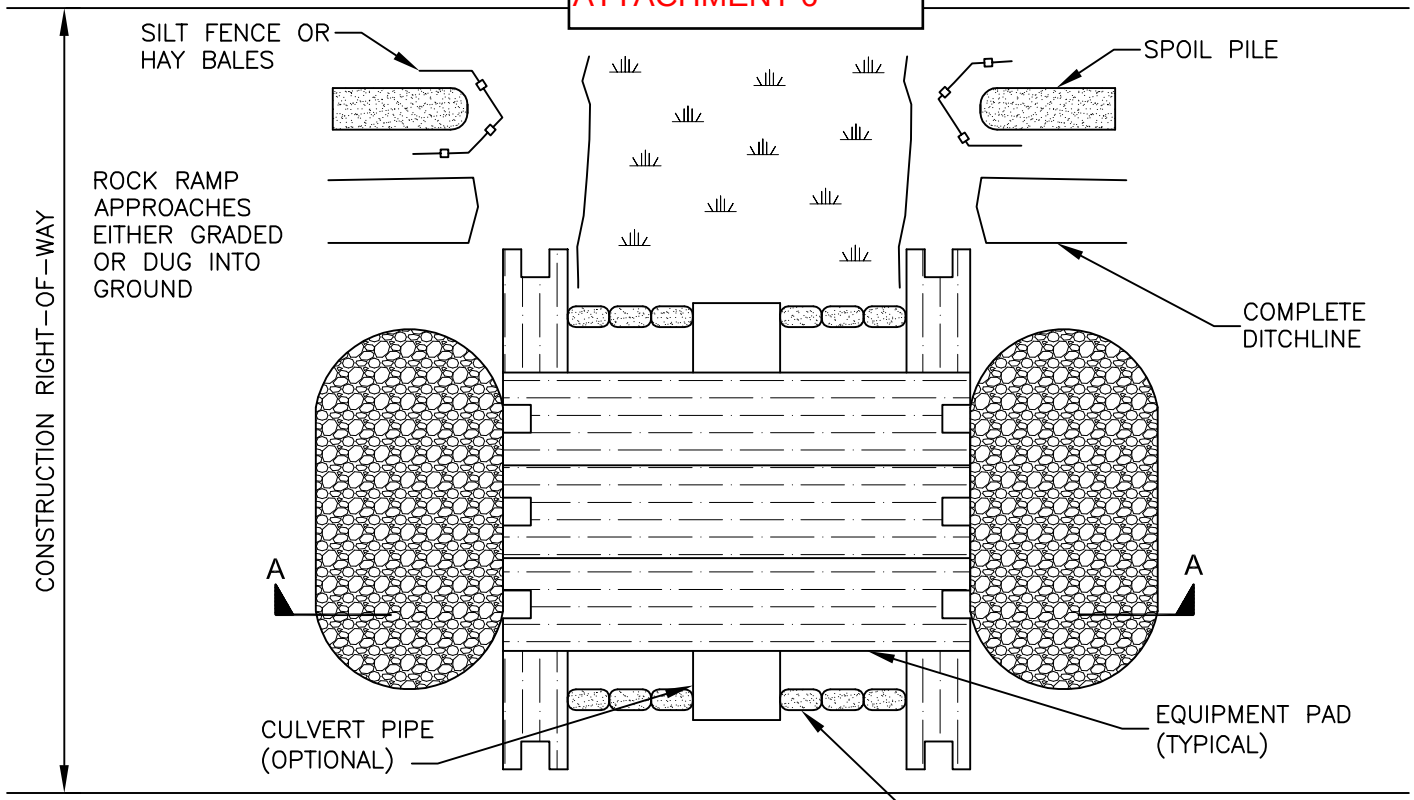

PLAN VIEW

TYPICAL PAD SECTION DIMENSIONS
3' WIDE, 1' THICK, 20' LONG

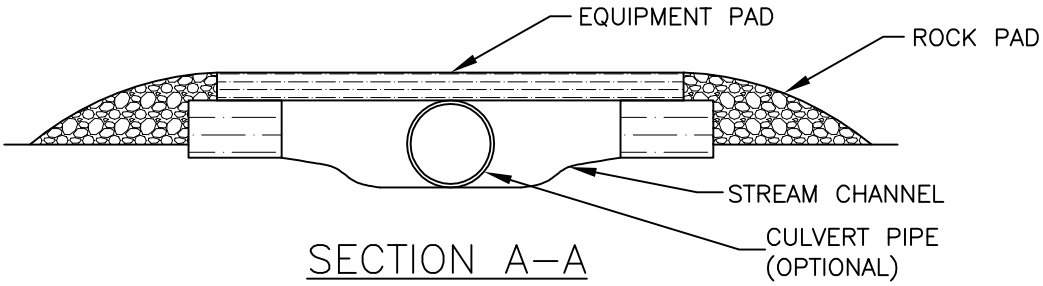

SECTION A–A

NOTES:
1. CULVERT PIPE UTILIZED IF ADDITIONAL SUPPORT IS REQUIRED.
2. ADDITIONAL PADS CAN BE PUT SIDE BY SIDE IF EXTRA WIDTH IS REQUIRED
3. EQUIPMENT PAD TYPICALLY CONSTRUCTED OF HARDWOOD; MUST ACCOMMODATE THE LARGEST EQUIPMENT USED.
4. ROCK PADS OR CRUSHED STONE SHALL BE USED AT ENTRANCE TO THE EQUIPMENT PADS (IF NECESSARY).

Designed	A WIRONEN
Drawn	DFW/TRC
Checked	.
Approved	.
Scale	NONE

No.	Revision	Date	By	Ck	PE	PE #
0	ISSUED FOR PERMIT	12/06/10	TRC	TRC	.	.
1	ISSUED FOR PERMIT	02/20/12	TRC	TRC	.	.

Transmission Developers Inc.

Champlain Hudson Power Express Project

Champlain Hudson Power Express Inc.

TEMP. EQUIPMENT BRIDGE (WOODEN MAT)

176764-UM-17

Prepared by: HDR | DTA & TRC 12/06/2010

NAN-2009-01089-EYA
ATTACHMENT 6

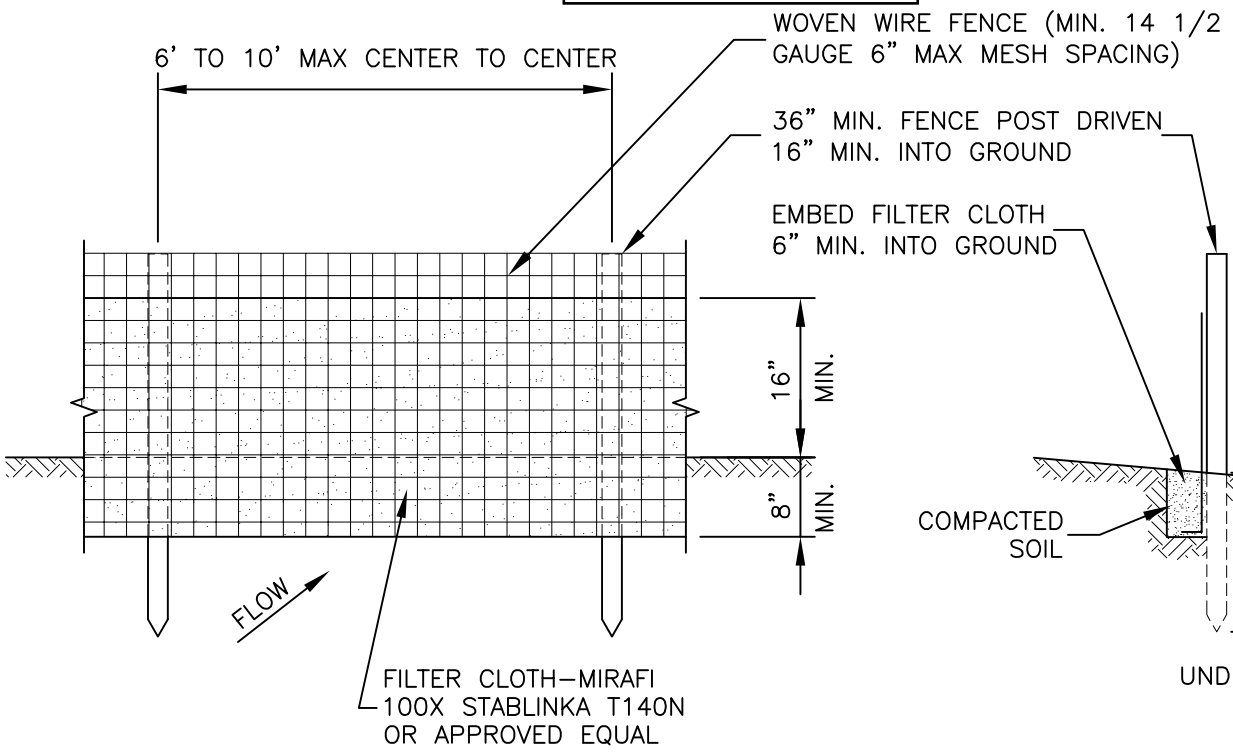

ELEVATION

SECTION

NOTES:

1. WOVEN WIRE FENCE TO BE FASTENED TO FENCE POSTS WITH WIRE TIES OR STAPLES.
2. FILTER CLOTH TO BE FASTENED SECURELY TO WOVEN WIRE FENCE WITH TIES SPACED EVERY 24" AT TOP AND MID SECTION.
3. WHEN TWO SECTIONS OF FILTER CLOTH ADJOIN EACH OTHER THEY SHALL BE OVERLAPPED BY 6" AND FOLDED.
4. MAINTENANCE SHALL BE PERFORMED AS NEEDED AND MATERIAL REMOVED WHEN "BULGES" DEVELOP IN THE SILT FENCE.

POSTS:
STEEL "T" OR "U" TYPE OR 2" HARDWOOD.

FENCE:
WOVEN WIRE. 14 1.2 GA. 6" MAX MESH OPENING.

FILTER CLOTH:
FILTER X, MIRAFI 100X. STABLINKA T140N OR APPROVED EQUAL.

PREFABRICATED UNIT:
ENVIROFENCE OR APPROVED EQUAL.

SILT FENCE DETAIL

Transmission Developers Inc.

Champlain Hudson Power Express Project

Champlain Hudson Power Express Inc.

SILT FENCE

176764-UM-21

Prepared by: HDR DTA & TRC 12/06/2010

Designed	A WIRONEN
Drawn	JRP/TRC
Checked	.
Approved	.
Scale	NONE

No.	Revision	Date	By	Ck	PE	PE #
0	ISSUED FOR PERMIT	12/06/10	TRC	TRC	.	.
1	ISSUED FOR PERMIT	02/20/12	TRC	TRC	.	.

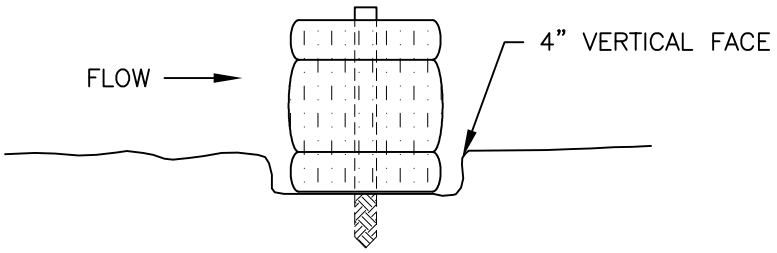

EMBEDDING DETAIL

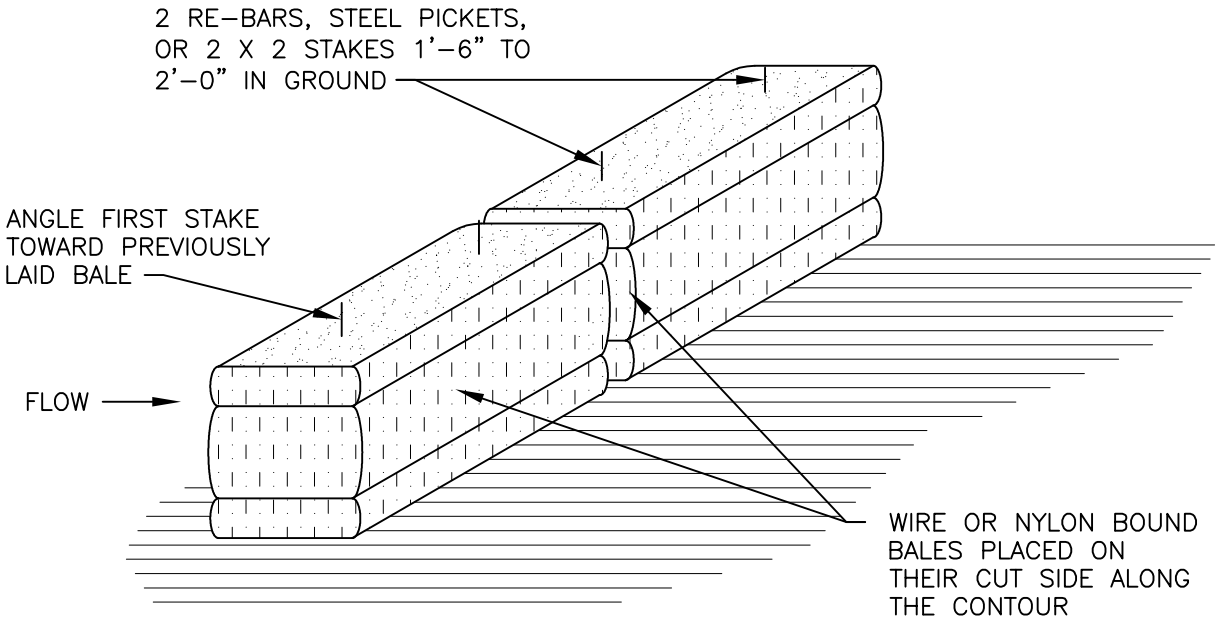

ANCHORING DETAIL

STRAW BALE DIKE DETAIL

Designed	A WIRONEN
Drawn	JRP/TRC
Checked	.
Approved	.
Scale	NONE

No.	Revision	Date	By	Ck	PE	PE #
0	ISSUED FOR PERMIT	12/06/10	TRC	TRC	.	.
1	ISSUED FOR PERMIT	02/20/12	TRC	TRC	.	.

Transmission Development Inc.

Champlain Hudson Power Express Project

Champlain Hudson Power Express Inc.

STRAW BALE DIKE

176764-UM-22

Prepared by: HDR DTA & TRC 12/06/2010

NAN-2009-01089-EYA
ATTACHMENT 6

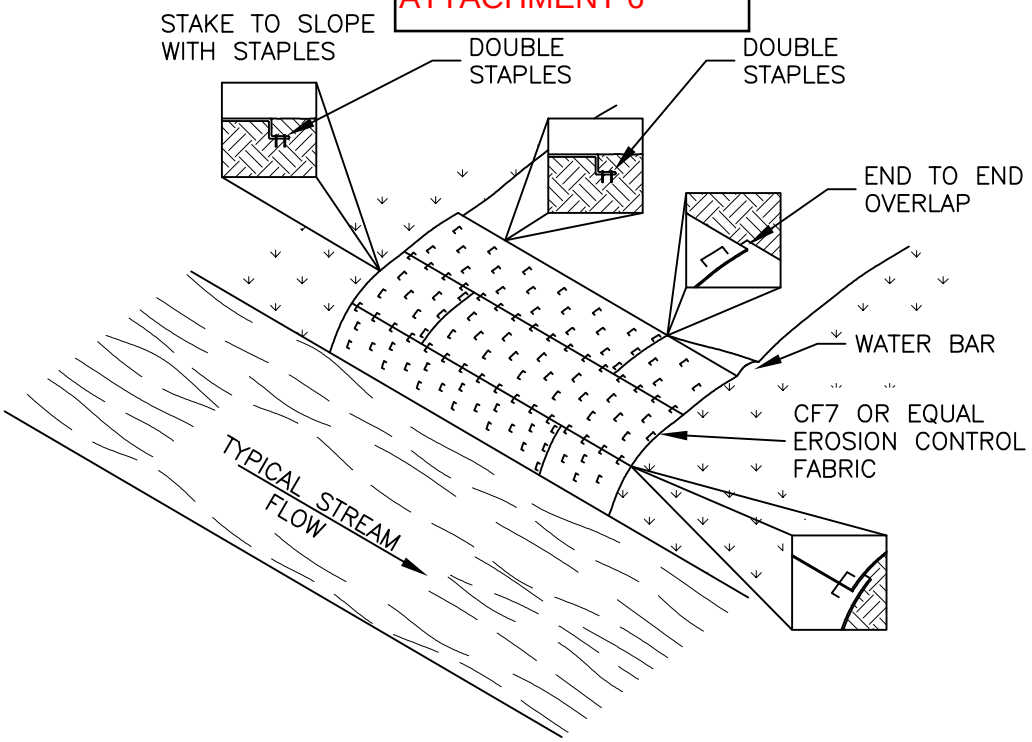

NOTES:

1. EROSION CONTROL MATTING SHALL BE PLACED ON THE BANKS OF FLOWING STREAMS WHERE VEGETATION HAS BEEN REMOVED OR AS DIRECTED BY THE ENVIRONMENTAL INSPECTOR.
2. THE EROSION CONTROL MATTING SHALL MEET THE REQUIREMENTS SPECIFIED IN THE SOIL EROSION AND SEDIMENTATION CONTROL GUIDELINES AND/OR AS DIRECTED BY THE ENVIRONMENTAL INSPECTOR.
3. STAPLES SHALL BE MADE OF 11 GAUGE WIRE, U–SHAPED WITH 6" LEGS AND A 1" CROWN. STAPLES SHALL BE DRIVEN INTO THE GROUND FOR THE FULL LENGTH OF THE STAPLE LEGS. ALTERNATELY 1" WOODEN PEGS 6" LONG AND BEVELED TO SECURE MATTING.
4. MATTING SHALL BE INSTALLED ACCORDING TO MANUFACTURER SPECIFICATIONS OR AS STATED BELOW:
   - *THE TOP OF THE BLANKET SHALL EXTEND 2' PAST THE UPPER EDGE OF THE HIGH WATER MARK. IF A WATERBED IS PRESENT ON THE APPROACH SLOPE, THE BLANKET SHALL BEGIN ON THE UPHILL SIDE OF THE WATERBED.
   - *INSTALL BLANKET(S) ACROSS THE SLOPE IN THE DIRECTION OF WATER FLOW.
   - *ANCHOR ("KEY") THE UPSTREAM EDGE OF THE BLANKET(S) INTO THE SLOPE USING A 6" WIDE BY 6" DEEP TRENCH. DOUBLE STAPLE EVERY 12" BEFORE BACK FILLING AND COMPACTING TRENCH.
   - *ANCHOR ("KEY") THE UPPER EDGE OF THE BLANKET INTO THE SLOPE USING A 6" WIDE BY 6" DEEP TRENCH. DOUBLE STAPLE EVERY 12" BEFORE BACK FILLING AND COMPACTING TRENCH.
   - *THE EDGES OF PARALLEL BLANKETS SHALL BE OVERLAPPED A MINIMUM OF 6". THE UPPER BLANKET SHALL BE PLACED OVER THE LOWER BLANKET (SHINGLE STYLE) AND STAPLED EVERY 12" ALONG THE LENGTH OF THE EDGE.
   - *WHEN BLANKET ENDS ARE TO ADJOINING BLANKETS, THE UPSTREAM BLANKET SHALL BE PLACED OVER THE DOWNSTREAM BLANKET (SHINGLE STYLE) WITH APPROXIMATELY 6" OF OVERLAP, STAPLE THROUGH THE OVERLAP AREA EVERY 12".
   - *STAPLE DOWN THE CENTER OF THE BLANKET(S), THREE STAPLES IN EVERY SQUARE YARD.
5. IN LIVESTOCK AREAS WHERE EROSION CONTROL MATTING IS APPLIED TO STREAM BANKS, FENCING WILL BE USED IF NECESSARY TO EXCLUDE LIVESTOCK, WITH PERMISSION OF THE LANDOWNER.
6. MONITOR FOR WASHOUTS, STAPLE INTEGRITY OR MAT MOVEMENT. REPLACE OR REPAIR AS NECESSARY.

Designed	A WIRONEN
Drawn	JRP/TRC
Checked	.
Approved	.
Scale	NONE

No.	Revision	Date	By	Ck	PE	PE #
0	ISSUED FOR PERMIT	12/06/10	TRC	TRC	.	.
1	ISSUED FOR PERMIT	02/20/12	TRC	TRC	.	.

Transmission Developers Inc.

Champlain Hudson Power Express Project

Champlain Hudson Power Express Inc.

TYPICAL MATTING STREAMBANKS

176764-UM-24

Prepared by: HDR | DTA & TRC 12/06/2010

Attachment 7 - Waterbody Crossings List

NAN-2009-01089-EYA
ATTACHMENT 7

Table 4-2 Summary of Waterbodies within the Study Area						
Approximate MP	**Waterbody Name**	**Waterbody Field ID**	**Flow Status**	**Substrate**	**Width[1] (feet)**	**Depth[1] (feet)**
Route 22						
102.2	Unnamed Tributary to Lake Champlain	AS54	Perennial	Silt-mud	3	0.5
102.3	Unnamed Tributary to Lake Champlain	AS53	Perennial	Sand/gravel-cobble	4	0.2
102.3	Overflow channel in flood plain of AS-50	AS52	Intermittent	Silt-mud/sand/gravel-cobble	2	0.2
102.3	Unnamed Tributary to Lake Champlain	AS50	Perennial	Sand/gravel-cobble/ boulder/ bedrock	20	0.7
102.4	Unnamed Tributary to Lake Champlain	AS51	Ephemeral	Grass	2	0.0
102.5	Unnamed Tributary to Lake Champlain	AS49	Ephemeral	Silt-mud/gravel-cobble	2	0.1
102.9	Unnamed Tributary to Lake Champlain	AS48	Perennial	Silt-mud/gravel-cobble	25	0.3
103.1	Unnamed Tributary to Lake Champlain	AS47	Intermittent	Gravel-cobble	5	0.3
103.2	Unnamed Tributary to Lake Champlain	AS46	Intermittent	Silt-mud	2	0.2
103.5	Unnamed Tributary to Lake Champlain	AS45	Perennial	Gravel-cobble/boulder/ bedrock	7	0.5
103.6	Unnamed Tributary to Lake Champlain	AS44	Perennial	Gravel-cobble/boulder	7	0.4
103.7	Unnamed Tributary to Lake Champlain	AS43	Intermittent	Silt-mud	3	0.3
103.8	Unnamed Tributary to Lake Champlain	AS42	Intermittent	Gravel-cobble	5	0.3
103.8	Unnamed Tributary to Lake Champlain	AS41	Perennial	Sand/gravel-cobble/boulder	9	2.5
103.9	Unnamed Tributary to Lake Champlain	AS40	Perennial	Silt-mud	5	0.5
104.2	Unnamed Tributary to Lake Champlain	AS39	Perennial	Gravel-cobble	12	0.8
104.4	Unnamed Tributary to Lake Champlain	AS38	Intermittent	Silt-mud	2	0.1
104.8	Unnamed Tributary to Lake Champlain	AS37	Perennial	Sand/gravel-cobble/boulder	20	1.0
104.9	Unnamed Tributary to Lake Champlain	AS36	Intermittent	Gravel-cobble	2	0.3
105.1	Unnamed Tributary to Lake Champlain	AS35	Perennial	Gravel-cobble/boulder/ bedrock	6	0.3
105.2	Unnamed Tributary to Lake Champlain	AS34	Intermittent	Gravel-cobble	3	0.3

NAN-2009-01089-EYA
ATTACHMENT 7

Table 4-2 Summary of Waterbodies within the Study Area						
Approximate MP	**Waterbody Name**	**Waterbody Field ID**	**Flow Status**	**Substrate**	**Width[1] (feet)**	**Depth[1] (feet)**
105.3	Unnamed Tributary to Lake Champlain	AS33	Perennial	Sand/gravel-cobble/boulder/ bedrock	25	1.0
105.7	Unnamed Tributary to Lake Champlain	AS32	Intermittent	Silt-mud/gravel-cobble	2	0.2
105.9	Unnamed Tributary to Lake Champlain	AS31	Perennial	Silt-mud/gravel-cobble/boulder	5	0.4
106	Unnamed Tributary to Lake Champlain	AS30	Intermittent	Gravel-cobble	3	0.1
106.3	Pine Lake Brook	AS29	Perennial	Gravel-cobble/boulder/ bedrock	30	0.5
106.5	Unnamed Tributary to Lake Champlain	AS28	Intermittent	Gravel-cobble/boulder	6	0.1
106.6	Unnamed Tributary to Lake Champlain	AS27	Intermittent	Gravel-cobble/boulder	3	0.2
107.2	Unnamed Tributary to Lake Champlain	AS26	Intermittent	Silt-mud/gravel-cobble	3	0.2
107.3	Unnamed Tributary to Lake Champlain	AS25	Perennial	Sand/gravel-cobble/boulder	8	0.5
107.3	Unnamed Tributary to Lake Champlain	AS24	Intermittent	Gravel-cobble/boulder	5	0.2
107.4	Unnamed Tributary to Lake Champlain	AS23	Intermittent	Gravel-cobble	2	0.2
107.9	Unnamed Tributary to Lake Champlain	AS22	Intermittent	Gravel-cobble/boulder	5	0.1
108	Unnamed Tributary to Lake Champlain	AS21	Perennial	Gravel-cobble/boulder/ bedrock	10	0.3
108.2	Unnamed Tributary to Lake Champlain	AS20	Perennial	Gravel-cobble/boulder/ bedrock	6	0.4
108.4	Unnamed Tributary to Lake Champlain	AS19	Perennial	Sand/gravel-cobble/boulder	4	0.3
108.4	Unnamed Tributary to Lake Champlain	AS18	Intermittent	Sand/gravel-cobble/boulder	3	0.3
108.5	Unnamed Tributary to Lake Champlain	AS17	Intermittent	Silt-mud/gravel-cobble	3	0.3
108.5	Unnamed Tributary to Lake Champlain	AS15	Perennial	Gravel-cobble/boulder	6	0.3
108.8	Unnamed Tributary to Lake Champlain	AS14	Perennial	Gravel-cobble/boulder/ bedrock	5	0.3
108.9	Unnamed Tributary to Lake Champlain	AS12	Intermittent	Gravel-cobble/boulder/ bedrock	2	0.3

NAN-2009-01089-EYA
ATTACHMENT 7

Table 4-2 Summary of Waterbodies within the Study Area						
Approximate MP	**Waterbody Name**	**Waterbody Field ID**	**Flow Status**	**Substrate**	**Width[1] (feet)**	**Depth[1] (feet)**
108.9	Unnamed Tributary to Lake Champlain	AS11	Perennial	Gravel-cobble/boulder/ bedrock	4	0.3
108.9	Unnamed Tributary to Lake Champlain	AS13	Intermittent	Gravel-cobble/boulder/ bedrock	2	0.3
109.1	Unnamed Tributary to Lake Champlain	AS10	Intermittent	Gravel-cobble/boulder	3	0.2
109.2	Unnamed Tributary to Lake Champlain	AS09	Intermittent	Boulder	1	0.2
109.2	Unnamed Tributary to Lake Champlain	AS08	Perennial	Gravel-cobble/boulder/ bedrock	4	0.3
109.3	Unnamed Tributary to Lake Champlain	AS07	Ephemeral	Boulder/bedrock	2	0.2
109.4	Unnamed Tributary to Lake Champlain	AS06	Intermittent	Gravel-cobble	2	0.2
109.8	South Bay, Lake Champlain	-	Perennial	Unknown	1,800	Unknow n
110.4	Unnamed Tributary to South Bay, Lake Champlain	AS-05	Intermittent	Silt-mud	3	0.3
110.7	Unnamed Tributary to Lake Champlain	AS04	Intermittent	Silt-mud	3	0.3
111.3	Unnamed Tributary to The Elbow, Lake Champlain	AS03	Intermittent	Silt-mud/gravel-cobble	3	0.2
111.4	Unnamed Tributary to The Elbow, Lake Champlain	AS02	Intermittent	Silt-mud/gravel-cobble	3	0.3
111.7	Unnamed Tributary to The Elbow, Lake Champlain	AS01	Intermittent	Silt-mud	2	0.2
CP						
113	Unnamed Tributary to Champlain Canal	B54-6A	Perennial	Silt-mud	10	2
114.1	Unnamed Tributary to Champlain Canal	B54-6	Perennial	Silt-mud	6	2
114.3	Unnamed Tributary to Champlain Canal	B54-5	Perennial	Silt-mud	30	3
114.5	Unnamed Tributary to Champlain Canal	B54-4	Perennial	Silt-mud	30	3
115.2	Unnamed Tributary to Champlain Canal	B54-3	Perennial	Silt-mud	30	3
116.1	Unnamed Tributary to Champlain Canal	B54-2	Perennial	Silt-mud	20	2

NAN-2009-01089-EYA
ATTACHMENT 7

Table 4-2 Summary of Waterbodies within the Study Area						
Approximate MP	**Waterbody Name**	**Waterbody Field ID**	**Flow Status**	**Substrate**	**Width[1] (feet)**	**Depth[1] (feet)**
116.9	Unnamed Tributary to Champlain Canal	B54-1	Perennial	Silt-mud	30	3
117.3	Unnamed Tributary to Champlain Canal	B53-3	Intermittent	Silt-mud	3	0.5
117.5	Unnamed Tributary to Champlain Canal	B53-1	Intermittent	Silt-mud	2	0.5
117.5	Unnamed Tributary to Champlain Canal	B53-2	Intermittent	Silt-mud	3	0.5
117.8	Unnamed Tributary to Champlain Canal	B52-1	Intermittent	Silt-mud	6	2
119.1	Unnamed Tributary to Champlain Canal	B48-1	Intermittent	Silt-mud	6	0.5
119.3	Unnamed Tributary to Champlain Canal	F18	Intermittent	Silt-mud	6	0.5
119.4	Unnamed Tributary to Champlain Canal	F19	Intermittent	Silt-mud/gravel-cobble	3	0.5
121.4	Unnamed Tributary to Champlain Canal	F15	Intermittent	Silt-mud	8	0.5
121.7	Unnamed Tributary to Champlain Canal	F14	Intermittent	Sand	6	0.25
122.4	Unnamed Tributary to Champlain Canal	F12	Perennial	Silt-mud/gravel-cobble/boulder	15	Unknown
122.9	Halfway Creek	F11	Perennial	Silt-mud	50	Unknown
123.3	Unnamed Tributary to Champlain Canal	F9	Ephemeral	Sand	6	0.5
123.5	Unnamed Tributary to Champlain Canal	F8-2	Intermittent	Gravel-cobble	10	0.5
125.5	Unnamed Tributary to Champlain Canal	F8-1	Perennial	Silt-mud	50	Unknown
125.8	Unnamed Tributary to Champlain Canal	F7	Ephemeral	Gravel-cobble/boulder	5	0
126.1	Unnamed Tributary to Champlain Canal	F6	Ephemeral	Mix	1	0
127.1	Unnamed Tributary to Champlain Canal	F5	Perennial	Gravel-cobble/boulder	30	0.5
127.4	Unnamed Tributary to Champlain Canal	F4	Intermittent	Gravel-cobble	25	0.1
128	Unnamed Tributary to Champlain Canal	F2-2	Perennial	Gravel-cobble	25	0.5
128.7	Unnamed Tributary to Champlain Canal	F2-1	Intermittent	Silt-mud	6	0
130.8	Unnamed Tributary to Champlain Canal	A55	Perennial	Silt-mud	8	3
131.7	Bond Creek	A1	Perennial	Silt-mud	30	5

NAN-2009-01089-EYA
ATTACHMENT 7

Table 4-2 Summary of Waterbodies within the Study Area						
Approximate MP	**Waterbody Name**	**Waterbody Field ID**	**Flow Status**	**Substrate**	**Width[1] (feet)**	**Depth[1] (feet)**
132	Unnamed Tributary to Champlain Canal	A2	Intermittent	Peat-muck	3.5	1
133.7	Unnamed Tributary to Champlain Canal	A7-1	Perennial	Mix	3.0	0.5
133.7	Unnamed Tributary to Champlain Canal	A7-2	Intermittent	Gravel-cobble	1.5	0
135	Hudson River (East Channel)	A11-1	Perennial	Unknown	200	20
135.2	Hudson River (West Channel)	A11-2	Perennial	Unknown	200	20
135.8	Unnamed Tributary to the Hudson River	A14	Intermittent	Silt-mud	1	0.5
136.2	Unnamed Tributary to the Hudson River	A17-1	Intermittent	Silt-mud/mix/gravel-cobble	5	0.5
136.2	Unnamed Tributary to the Hudson River	A17-2	Intermittent	Silt-mud	1	0.25
136.4	Unnamed Tributary to the Hudson River	A19	Intermittent	Silt-mud/mix	2	0.75
136.6	Unnamed Tributary to the Hudson River	A21	Intermittent	Silt-mud	5	0.6
136.7	Unnamed Tributary to the Hudson River	A23	Intermittent	Boulder	2	0.5
136.8	Unnamed Tributary to the Hudson River	A24	Intermittent	Silt-mud	2	0.5
137.9	North Branch Snook Kill	A29	Perennial	Unknown	30	4
138.6	Unnamed Tributary to North Branch Snook Kill	A36	Intermittent	Unknown/silt-mud	2.0	0.50
139.9	Unnamed Tributary to Snook Kill	A41	Perennial	Mix/Silt-mud	1	0.5
140.1	Snook Kill	A42	Perennial	Gravel-cobble	15	2
140.2	Unnamed Tributary to Snook Kill	A44-2	Intermittent	Gravel-cobble	3	0.5
140.3	Unnamed Tributary to Snook Kill	A43	Intermittent	Silt-mud/mix/gravel-cobble	2.5	0.2
141.7	Unnamed Tributary to Rice Brook	A49-1	Perennial	Mix/gravel-cobble/Silt-mud	6	1
141.8	Unnamed Tributary to Rice Brook	A53	Intermittent	Silt-mud	4	0.5
142	Unnamed Tributary to Rice Brook	A49-2	Intermittent	Silt-mud/unknown	3	0.5
142.9	Unnamed Tributary to Rice Brook	D7	Perennial	Sand/gravel-cobble	6	1
143.6	Unnamed Tributary to Rice Brook	D1	Ephemeral	Mix/peat-muck	2.5	0.5

Table 4-2
Summary of Waterbodies within the Study Area

Approximate MP	Waterbody Name	Waterbody Field ID	Flow Status	Substrate	Width[1] (feet)	Depth[1] (feet)
145.1	Delegan Brook	B38	Perennial	Unknown	60	Unknown
149.6	Unnamed Tributary to Loughberry Lake/Spring Run	B1	Perennial	Silt-mud/peat-muck/mix	10	2.5
150	Unnamed Tributary to Loughberry Lake/Spring Run	B2	Intermittent	Unknown	3	1
150.5	Unnamed Tributary to Loughberry Lake/Spring Run	B3-2	Intermittent	Sand	6	0.5
150.6	Unnamed Tributary to Loughberry Lake/Spring Run	B3-1	Intermittent	Gravel-cobble	6	0.5
152	Unnamed Tributary to Putnam Brook	B5-1	Perennial	Silt-mud	10	2
152	Putnam Brook	B5-2	Perennial	Silt-mud	20	3.5
152.1	Unnamed Tributary to Putnam Brook	B5-3	Intermittent	Gravel-cobble/mix	3	2
152.2	Unnamed Tributary to Putnam Brook	B5-4	Intermittent	Silt-mud	0.5	0.2
153.7	Unnamed Tributary to Geyser Brook	B8-2	Intermittent	Silt-mud	3	0.5
153.8	Geyser Brook	B8-1	Perennial	Silt-mud	30	4-5
153.8	Unnamed Tributary to Geyser Brook	B8-3	Intermittent	Silt-mud	3	0.5
155.5	Unnamed Tributary to Geyser Brook	B47	Perennial	Unknown	Unknown	Unknown
156	Unnamed Tributary to Kayaderosseras Creek	B46	Intermittent	Sand	3	0.5
156.2	Unnamed Tributary to Kayaderosseras Creek	B45-1	Intermittent	Silt-mud	3	0.5
156.2	Unnamed Tributary to Kayaderosseras Creek	B45-2	Perennial	Silt-mud	10	1
156.2	Unnamed Tributary to Kayaderosseras Creek	B45-3	Intermittent	Silt-mud	3	0
156.5	Unnamed Tributary to Kayaderosseras Creek	B44	Perennial	Unknown	Unknown	Unknown
157.4	Unnamed Tributary to Kayaderosseras Creek	B9-1	Intermittent	Sand	2	0.5
157.4	Unnamed Tributary to Kayaderosseras Creek	B9-2	Intermittent	Sand	3	0.5
157.6	Unnamed Tributary to Kayaderosseras Creek	B10-1	Intermittent	Sand	3	0.5
157.7	Unnamed Tributary to Kayaderosseras Creek	B10-2	Intermittent	Sand	10	0.5

NAN-2009-01089-EYA
ATTACHMENT 7

Table 4-2 Summary of Waterbodies within the Study Area						
Approximate MP	**Waterbody Name**	**Waterbody Field ID**	**Flow Status**	**Substrate**	**Width[1] (feet)**	**Depth[1] (feet)**
157.7	Unnamed Tributary to Kayaderosseras Creek	B10-3	Intermittent	Sand/Silt-mud	6	0.5
157.7	Unnamed Tributary to Kayaderosseras Creek	B10-5	Intermittent	Silt-mud	6	0.25
157.9	Unnamed Tributary to Kayaderosseras Creek	B10-6	Intermittent	Sand	4	0.5
158	Kayaderosseras Creek	B10-7	Perennial	Unknown	50	5
159.5	Unnamed Tributary to Mourning Kill	B23-1	Intermittent	Silt-mud	2	0.5
159.5	Unnamed Tributary to Mourning Kill	B23-2	Intermittent	Silt-mud	2	0.5
159.6	Unnamed Tributary to Mourning Kill	B23-3	Intermittent	Silt-mud	2	0.5
159.7	Unnamed Tributary to Mourning Kill	B23-5	Intermittent	Silt-mud	2	0.5
159.8	Unnamed Tributary to Mourning Kill	B23-4	Intermittent	Silt-mud	2	0.5
160.4	Unnamed Tributary to Mourning Kill	B25-1	Intermittent	Gravel-cobble	2.5	0.5
160.7	Mourning Kill	B28	Perennial	Gravel-cobble	20	3
161.2	Unnamed Tributary to Ballston Creek	B30-1	Ephemeral	Gravel-cobble	1	0
161.2	Unnamed Tributary to Ballston Creek	B30-2	Intermittent	Boulder	5	1
161.7	Unnamed Tributary to Ballston Creek	B31-1	Intermittent	Gravel-cobble	6	1
161.8	Unnamed Tributary to Ballston Creek	B32-1	Intermittent	Gravel-cobble	8	1
162.2	Unnamed Tributary to Ballston Lake	B34-1	Intermittent	Mix	6	1
162.6	Unnamed Tributary to Ballston Lake	B35-1	Intermittent	Gravel-cobble	6	0.5
163.1	Unnamed Tributary to Ballston Lake	C1	Perennial	Gravel-cobble	10	0.5
163.7	Unnamed Tributary to Ballston Lake	C5	Intermittent	Gravel-cobble/Unknown	6	0.5
163.9	Unnamed Tributary to Ballston Lake	C6	Intermittent	Unknown	6	0.5
164.1	Unnamed Tributary to Ballston Lake	C7	Intermittent	Unknown/gravel-cobble	10	0.5
164.2	Unnamed Tributary to Ballston Lake	C8-1	Intermittent	Unknown/gravel-cobble/peat-muck	8	0.5
164.3	Unnamed Tributary to Ballston Lake	C8-2	Intermittent	Unknown/gravel-cobble/peat-muck	8	0.5

NAN-2009-01089-EYA
ATTACHMENT 7

Table 4-2 Summary of Waterbodies within the Study Area						
Approximate MP	**Waterbody Name**	**Waterbody Field ID**	**Flow Status**	**Substrate**	**Width[1] (feet)**	**Depth[1] (feet)**
164.5	Unnamed Tributary to Ballston Lake	C8-3	Intermittent	Unknown/gravel-cobble/peat-muck	8	0.5
164.7	Unnamed Tributary to Ballston Lake	C11	Intermittent	Unknown/mix/gravel-cobble	2	0.2
165	Unnamed Tributary to Ballston Lake	C13	Intermittent	Unknown/gravel-cobble	6	0.4
165.1	Unnamed Tributary to Ballston Lake	C16	Intermittent	Gravel-cobble/mix	7	0.4
165.3	Unnamed Tributary to Ballston Lake	C18	Intermittent	Gravel-cobble	3	0.3
165.7	Unnamed Tributary to Alplaus Kill	C21	Intermittent	Gravel-cobble/mix/silt-mud	12	1.5
166.1	Unnamed Tributary to Alplaus Kill	C24	Ephemeral	Gravel-cobble	5	2
166.2	Unnamed Tributary to Alplaus Kill	C25	Ephemeral	Gravel-cobble/mix/silt-mud	2.5	1
166.6	Unnamed Tributary to Alplaus Kill	C26	Perennial	Mix	8	3
167	Unnamed Tributary to Alplaus Kill	C28	Ephemeral	Gravel-cobble	3	0.5
167.2	Unnamed Tributary to Alplaus Kill	C29	Ephemeral	Silt-mud	4	1
167.5	Unnamed Tributary to Alplaus Kill	C31	Ephemeral	Silt-mud/mix/gravel-cobble	6	1
168.1	Unnamed Tributary to Alplaus Kill	C34	Intermittent	Mix	3	0.6
168.4	Unnamed Tributary to Alplaus Kill	C36	Intermittent	Mix	3	0.6
168.6	Alplaus Kill	C33	Perennial	Silt-mud/Gravel-cobble	30	5
169	Unnamed Tributary to Alplaus Kill	C38	Intermittent	Silt-mud	3	0.3
169.4	Unnamed Tributary to Alplaus Kill	C40	Intermittent	Silt-mud	1.5	0.1
169.5	Unnamed Tributary to Alplaus Kill	C39	Intermittent	Gravel-cobble	3	0.2
170.1	Unnamed Tributary to Mohawk River	C42-1	Intermittent	Peat-muck/unknown	4	0.5
170.2	Unnamed Tributary to Mohawk River	C42-2	Intermittent	Peat-muck/gravel-cobble	12	1.5
170.9	Unnamed Tributary to Mohawk River	XS1	Intermittent	Silt-Mud/Gravel/Cobble	4	3
170.9	Unnamed Tributary to Mohawk River	XS2	Intermittent	Silt-Mud/Sand	4	2

NAN-2009-01089-EYA
ATTACHMENT 7

Table 4-2 Summary of Waterbodies within the Study Area						
Approximate MP	**Waterbody Name**	**Waterbody Field ID**	**Flow Status**	**Substrate**	**Width[1] (feet)**	**Depth[1] (feet)**
171.2	Unnamed Tributary to Mohawk River	C43	Ephemeral	Unknown/silt-mud	8	0.5
171.7	Mohawk River	C43A	Perennial	Unknown	465	Unknown
174.9	Unnamed Tributary	C46	Intermittent	Peat-muck, silt-mud, unknown	2	0.2
174.9	Unnamed Tributary	C47	Ephemeral	Silt-mud	0.5	2
175	Unnamed Tributary	C48	Intermittent	Silt-mud	1	0.1
175	Unnamed Tributary	C49	Intermittent	Silt-mud	3	0.1
175.1	Unnamed Tributary	C50	Intermittent	Silt-mud	2	0.1
175.1	Unnamed Tributary	C51	Intermittent	Silt-mud	5	0.1
175.1	Unnamed Tributary	C52	Ephemeral	Mix	2	0.1
175.1	Unnamed Tributary	C53	Intermittent	Silt-mud/mix/unknown	3	0.1
175.2	Unnamed Tributary	C54	Intermittent	Unknown/gravel-cobble/silt-mud	3	0.1
175.2	Unnamed Tributary	C55	Ephemeral	Silt-mud	4	0.1
176	Unnamed Tributary	C57	Intermittent	Unknown	0.5	0.1
176.9	Poentic Kill	C58	Perennial	Boulder	25	1.5
177	Poentic Kill	E1	Perennial	Gravel-cobble/boulder	15	0.5
CSX						
178.9	Unnamed Tributary to Normans Kill	E3-1	Perennial	Silt-mud/gravel-cobble	6	0.5
179.2	Unnamed Tributary to Normans Kill	E4-1	Perennial	Silt-mud/gravel-cobble	12	1
179.8	Unnamed Tributary to Normans Kill	E7-1	Perennial	Silt-mud	10	0.5
180.1	Unnamed Tributary to Normans Kill	E9-1	Perennial	Silt-mud	5	0.5
180.4	Unnamed Tributary to Normans Kill	E9-2	Perennial	Silt-mud	8	0.5
180.5	Unnamed Tributary to Normans Kill	E10-1	Perennial	Silt-mud/gravel-cobble	12	1
180.7	Unnamed Tributary to Normans Kill	E10-2	Perennial	Gravel-cobble	12	1
181	Unnamed Tributary to Normans Kill	E12-1	Perennial	Gravel-cobble	15	1
181.1	Unnamed Tributary to Normans Kill	E14-1	Perennial	Sand	8	1

Table 4-2
Summary of Waterbodies within the Study Area

Approximate MP	Waterbody Name	Waterbody Field ID	Flow Status	Substrate	Width[1] (feet)	Depth[1] (feet)
181.6	Unnamed Tributary to Watervliet Reservoir	E15-1	Perennial	Silt-mud	15	1
181.7	Unnamed Tributary to Watervliet Reservoir	E15-2	Perennial	Silt-mud	25	1
182	Unnamed Tributary to Watervliet Reservoir	E95	Perennial	Gravel-cobble	10	1
182.4	Unnamed Tributary to Watervliet Reservoir	E97	Perennial	Silt-mud/gravel-cobble	10	0.5
183	Unnamed Tributary to Unnamed Pond (E98)	E98	Intermittent	Silt-mud	3	0.1
183.7	Normans Kill	E74	Perennial	Bedrock	300	4
186	Unnamed Tributary to Black Creek	E22	Intermittent	Silt-mud	2	0.25
186.2	Unnamed Tributary to Black Creek	E21	Intermittent	Silt-mud/gravel-cobble	2	0.5
187.7	Unnamed Tributary to Vly Creek	E28	Perennial	Silt-mud/gravel-cobble	4	1.5
188	Unnamed Tributary to Vly Creek	E29	Perennial	Silt-mud	10	1.5
188.4	Vly Creek	E30	Perennial	Gravel-cobble/boulder	35	1
189.6	Unnamed Tributary to Vloman Kill	E32	Perennial	Mix	5	0.75
189.8	Unnamed Tributary to Vloman Kill	E33-1	Perennial	Gravel-cobble	4	0.5
189.8	Unnamed Tributary to Vloman Kill	E33-2	Perennial	Silt-mud	1	0.25
190	Unnamed Tributary to Vloman Kill	E82-1	Intermittent	Silt-mud	6	0.25
190.6	Unnamed Tributary to Vloman Kill	E37	Perennial	Silt-mud	4	1
190.9	Unnamed Tributary to Vloman Kill	E38	Perennial	Gravel-cobble	15	1
191.1	Unnamed Tributary to Vloman Kill	E39-1	Intermittent	Silt-mud	3	0.5
191.8	Unnamed Tributary to Vloman Kill	E45-1	Intermittent	Gravel-cobble	6	0.25
191.8	Unnamed Tributary to Vloman Kill	E45-2	Intermittent	Silt-mud	3	0.5
191.8	Vloman Kill	E45-2	Perennial	Silt-mud/gravel-cobble	15	1
192.4	Unnamed Tributary to Vloman Kill	E50-1	Perennial	Gravel-cobble	10	1
192.5	Unnamed Tributary to Vloman Kill	E50-2	Intermittent	Gravel-cobble	3	0.5

NAN-2009-01089-EYA
ATTACHMENT 7

Table 4-2 Summary of Waterbodies within the Study Area						
Approximate MP	**Waterbody Name**	**Waterbody Field ID**	**Flow Status**	**Substrate**	**Width[1] (feet)**	**Depth[1] (feet)**
192.5	Unnamed Tributary to Vloman Kill	E50-3	Perennial	Gravel-cobble	6	0.5
192.8	Unnamed Tributary to Vloman Kill	E86	Perennial	Gravel-cobble	30	1-3
193.2	Unnamed Tributary to Vloman Kill	E48-1	Intermittent	Silt-mud/gravel-cobble	4	0.25
193.9	Unnamed Tributary to Coeymans Creek	E48-2	Perennial	Silt-mud	10	0.5
193.9	Unnamed Tributary to Coeymans Creek	E48-3	Intermittent	Silt-mud	6	0.5
194.2	Unnamed Tributary to Coeymans Creek	E53-1	Perennial	Mix	8	0.5
195.9	Coeymans Creek	E58	Perennial	Silt-mud	15	0.5
196.3	Unnamed Tributary to Coeymans Creek	E62-1/E103-1	Perennial	Silt-mud/gravel-cobble	15	2
196.4	Unnamed Tributary to Coeymans Creek	E103	Intermittent	Silt-mud	3	0.5
196.7	Unnamed Tributary to Coeymans Creek	E103-2	Intermittent	Silt-mud/boulder	3	0.5
197.3	Unnamed Tributary to Vloman Kill	E63-3	Perennial	Silt-mud	4	0.1
197.4	Unnamed Tributary to Vloman Kill	E63-1	Ephemeral	Silt-mud	3	0.5
197.4	Unnamed Tributary to Vloman Kill	E63-2	Ephemeral	Silt-mud	6	0.5
197.5	Unnamed Tributary to Coeymans Creek	E105	Perennial	Silt-mud/concrete	10	3
197.6	Unnamed Tributary to Vloman Kill	E66-1	Perennial	Silt-mud	10	0.5
197.6	Unnamed Tributary to Vloman Kill	E66-2	Intermittent	Silt-mud/gravel-cobble	3	0.5
198.2	Unnamed Tributary to Coeymans Creek	E89-1	Perennial	Silt-mud	30	0.5
198.2	Unnamed Tributary to Coeymans Creek	E89-2	Ephemeral	Silt-mud	3	0.1
198.3	Unnamed Tributary to Coeymans Creek	E89-3	Intermittent	Silt-mud	6	1
199.3	Unnamed Tributary to Coeymans Creek	MS68	Perennial	Silt-mud/sand/gravel-cobble	5	0.2
199.4	Unnamed Tributary to Coeymans Creek	E99	Perennial	Boulder	20	1
199.4	Unnamed Tributary to Coeymans Creek	E99-1	Ephemeral	Silt-mud	1	0.1
199.5	Unnamed Tributary to Coeymans Creek	E107	Ephemeral	Silt-mud	3	0.5

NAN-2009-01089-EYA
ATTACHMENT 7

Table 4-2 Summary of Waterbodies within the Study Area						
Approximate MP	**Waterbody Name**	**Waterbody Field ID**	**Flow Status**	**Substrate**	**Width[1] (feet)**	**Depth[1] (feet)**
199.6	Unnamed Tributary to Coeymans Creek	E73	Intermittent	Silt-mud	6	0.25
199.6	Unnamed Tributary to Coeymans Creek	E73-1	Ephemeral	Silt-mud	1	0.1
199.6	Unnamed Tributary to Coeymans Creek	E73-2	Ephemeral	Silt-mud	1	0.1
200	Unnamed Tributary to Hudson River	E69	Intermittent	Silt-mud/gravel-cobble	3	0.5
200.4	Unnamed Tributary to Coeymans Creek	YS38	Intermittent	SIlt-mud	2	0.3
200.5	Unnamed Tributary to Coeymans Creek	MS66	Perennial	Silt-mud/sand/gravel-cobble	4	0.3
200.5	Unnamed Tributary to Coeymans Creek	MS66a	Perennial	Silt-mud/sand/gravel-cobble	4	0.3
200.5	Unnamed Tributary to Coeymans Creek	MS67	Intermittent	Silt-mud/sand/gravel-cobble	4	0.2
200.6	Unnamed Tributary to Coeymans Creek	MS66b	Intermittent	Silt-mud/sand/gravel-cobble	4	0.3
200.7	Unnamed Tributary to Coeymans Creek	MS62	Intermittent	Silt-mud/sand/gravel-cobble	4	0.3
200.7	Unnamed Tributary to Coeymans Creek	MS63	Intermittent	Silt-mud/sand/gravel-cobble	3	0.2
200.7	Unnamed Tributary to Coeymans Creek	MS64	Intermittent	Sand/gravel-cobble	5	0.3
200.7	Coeymans Creek	MS65	Perennial	Silt-mud/sand/gravel-cobble	40	5
200.7	Unnamed Tributary to Coeymans Creek	YS37	Perennial	Silt-mud/clay	3	0.5
200.9	Unnamed Tributary to Coeymans Creek	MS60	Perennial	Silt-mud/sand/gravel-cobble	8	1
200.9	Unnamed Tributary to Coeymans Creek	MS61	Intermittent	Sand/gravel-cobble	5	0.5
200.9	Unnamed Tributary to Coeymans Creek	YS36	Perennial	Silt-mud/clay	1	0.5
201	Unnamed Tributary to Coeymans Creek	MS59	Intermittent	Silt-mud/sand	3	0.2
202	Unnamed Tributary to Coeymans Creek	MS58	Perennial	Silt-mud/sand/gravel-cobble	5	1

Table 4-2
Summary of Waterbodies within the Study Area

Approximate MP	Waterbody Name	Waterbody Field ID	Flow Status	Substrate	Width[1] (feet)	Depth[1] (feet)
202	Unnamed Tributary to Coeymans Creek	YOW1	Perennial	Silt-mud	30	3
202	Unnamed Tributary to Coeymans Creek	YS35	Intermittent	Silt-mud	3	0.3
202.1	Unnamed Tributary to Coeymans Creek	MS57	Perennial	Silt-mud/sand/gravel-cobble	10	0.5
202.1	Unnamed Tributary to Coeymans Creek	YS34	Perennial	Silt-mud/clay	5	0.5
202.9	Unnamed Tributary to Coeymans Creek	MS56	Intermittent	Silt-mud/sand/gravel-cobble	8	0.5
202.9	Unnamed Tributary to Coeymans Creek	YS33	Intermittent	Silt-mud	2	0
203.5	Unnamed Tributary to Hannacroix Creek	MS55	Intermittent	Silt-mud/sand/gravel-cobble	4	0.3
204	Unnamed Tributary to Hannacroix Creek	MS54	Intermittent	Gravel-cobble	4	0.2
204.3	Unnamed Tributary to Hannacroix Creek	MS53	Intermittent	Sand/gravel-cobble	4	0.1
204.3	Unnamed Tributary to Hannacroix Creek	YS32b	Perennial	Gravel-cobble	4	0.3
204.8	Unnamed Tributary to Hannacroix Creek	YS32	Perennial	Gravel-cobble	4	0.3
205.9	Hannacroix Creek	MS52	Perennial	Gravel-cobble/boulder	50	3
206	Unnamed Tributary to Hannacroix Creek	MS51	Intermittent	Silt-mud/sand/gravel-cobble	4	0.2
206.1	Unnamed Tributary to Hannacroix Creek	MS49	Intermittent	Sand/gravel-cobble	4	0.2
206.1	Unnamed Tributary to Hannacroix Creek	MS50	Intermittent	Sand/gravel-cobble	4	0.2
206.7	Sickles Creek	YS31	Intermittent	Silt-mud/gravel-cobble	5	1.5
206.9	Sickles Creek	YS31	Perennial	Gravel-cobble/boulder	15	2
207	Unnamed Tributary to Sickles Creek	MS48	Intermittent	Silt-mud/sand/gravel-cobble	2	0.2
207.1	Unnamed Tributary to Sickles Creek	MS47	Perennial	Silt-mud/sand/gravel-cobble	4	0.3
207.2	Unnamed Tributary to Sickles Creek	YS30	Perennial	Gravel-cobble	3	0.5
207.5	Unnamed Tributary to Sickles Creek	MS46	Perennial	Sand/gravel-cobble	3	0.3

Table 4-2
Summary of Waterbodies within the Study Area

Approximate MP	Waterbody Name	Waterbody Field ID	Flow Status	Substrate	Width[1] (feet)	Depth[1] (feet)
207.8	Unnamed Tributary to Sickles Creek	YS29	Perennial	Silt-mud/gravel-cobble/clay	3	0.7
208.1	Unnamed Tributary to Sickles Creek	MS44	Intermittent	Peat-muck/silt-mud	3	0.2
208.1	Unnamed Tributary to Sickles Creek	MS45	Intermittent	Peat-muck/silt-mud/sand	2	0.2
208.4	Unnamed Tributary to Sickles Creek	YS28	Perennial	Gravel-cobble/boulder/clay	5	0.7
208.9	Unnamed Tributary to Sickles Creek	MS41	Perennial	Silt-mud/sand	3	0.3
208.9	Unnamed Tributary to Sickles Creek	MS42	Perennial	Peat-muck/silt-mud/sand	8	0.3
208.9	Unnamed Tributary to Sickles Creek	MS43	Intermittent	Silt-mud/sand	2	0.2
209	Unnamed Tributary to Sickles Creek	YS27	Intermittent	Silt-mud/gravel-cobble/clay	1	0
209.2	Unnamed Tributary to Coxsackie Creek	YS26	Perennial	Clay	1	0.2
209.4	Unnamed Tributary to Coxsackie Creek	YS25	Perennial	Silt-mud	3	0.4
209.5	Unnamed Tributary to Sickles Creek	YS24	Perennial	Sand/gravel-cobble/clay	5	0.7
209.7	Unnamed Tributary to Coxsackie Creek	YS23	Perennial	Sand/gravel-cobble/clay	5	0.7
210.1	Unnamed Tributary to Coxsackie Creek	MS40	Intermittent	Silt-mud/sand/gravel-cobble	4	0.3
210.3	Coxsackie Creek	MS37	Perennial	Silt-mud/sand/gravel-cobble	40	2
210.3	Unnamed Tributary to Coxsackie Creek	MS39	Intermittent	Silt-mud/sand	4	0.2
210.4	Unnamed Tributary to Coxsackie Creek	MS38	Intermittent	Silt-mud/sand	3	0.2
210.6	Unnamed Tributary to Coxsackie Creek	MS36	Intermittent	Silt-mud/sand	3	0.2
210.7	Unnamed Tributary to Coxsackie Creek	MS35	Perennial	Silt-mud	5	0.3
212.1	Unnamed Tributary to Coxsackie Creek	YS22	Perennial	Silt-mud/gravel-cobble	3	0.5
212.4	Unnamed Tributary to Coxsackie Creek	YS21	Perennial	Silt-mud/gravel-cobble	3	0.5
213.8	Unnamed Tributary to Murderer's Creek	MS34	Intermittent	Silt-mud/gravel-cobble	3	0.2
213.8	Unnamed Tributary to Murderer's Creek	MS34a	Intermittent	Silt-mud/gravel-cobble	3	0.2

NAN-2009-01089-EYA
ATTACHMENT 7

Table 4-2 Summary of Waterbodies within the Study Area						
Approximate MP	**Waterbody Name**	**Waterbody Field ID**	**Flow Status**	**Substrate**	**Width[1] (feet)**	**Depth[1] (feet)**
213.8	Unnamed Tributary to Murderer's Creek	MS34b	Intermittent	Silt-mud/gravel-cobble	3	0.2
213.9	Unnamed Tributary to Murderer's Creek	MS33	Intermittent	Silt-mud/gravel-cobble	3	0.2
214	Unnamed Tributary to Murderer's Creek	MS31	Intermittent	Silt-mud/sand/gravel-cobble	2	0.2
214	Unnamed Tributary to Murderer's Creek	MS32	Intermittent	Silt-mud/sand/gravel-cobble	2	0.2
214.2	Unnamed Tributary to Murderer's Creek	YS20	Perennial	Silt-mud/sand/gravel-cobble	2	1
214.5	Murderer's Creek	YS19	Perennial	Peat-muck/silt-mud/gravel/cobble	35	2
215.5	Unnamed Tributary to Murderer's Creek	YS18	Perennial	Silt-mud/gravel-cobble	2	0.5
219.3	Unnamed Tributary to Corlaer Kill	YS17	Perennial	Silt-mud/gravel-cobble	3	0.7
219.4	Corlaer Creek	MS30	Perennial	Silt-mud/sand/gravel-cobble	20	1.5
219.7	Unnamed Tributary to Corlaer Kill	MS29	Perennial	Silt-mud/gravel-cobble	3	0.3
220.1	Unnamed Tributary to Corlaer Kill	MS27	Perennial	Silt-mud/gravel-cobble	3	0.2
220.1	Unnamed Tributary to Corlaer Kill	MS28	Intermittent	Silt-mud/gravel-cobble	2	0.1
220.6	Unnamed Tributary to Hans Vosen Kill	YS16	Perennial	Silt-mud	30	3
220.7	Unnamed Tributary to Hans Vosen Kill	YS15	Perennial	Silt-mud/gravel-cobble	2	0.25
221	Unnamed Tributary to Catskill Creek	MS25	Perennial	Silt-mud/gravel-cobble	4	0.2
221	Unnamed Tributary to Catskill Creek	MS26	Perennial	Gravel-cobble	3	0.2
221.1	Unnamed Tributary to Catskill Creek	MS23	Perennial	Gravel-cobble	7	0.2
221.1	Unnamed Tributary to Catskill Creek	MS24	Intermittent	Gravel-cobble	2	0.1
221.1	Unnamed Tributary to Catskill Creek	MS24a	Intermittent	Gravel-cobble	2	0.1
221.3	Catskill Creek	YS14	Perennial	Gravel-cobble/ boulder/bedrock	324	10
222	Unnamed Tributary to Catskill Creek	MS21	Intermittent	Silt-mud	1	0.1

NAN-2009-01089-EYA
ATTACHMENT 7

Table 4-2 Summary of Waterbodies within the Study Area						
Approximate MP	**Waterbody Name**	**Waterbody Field ID**	**Flow Status**	**Substrate**	**Width[1] (feet)**	**Depth[1] (feet)**
222	Unnamed Tributary to Catskill Creek	MS22	Intermittent	Gravel-cobble	2	0.2
222.1	Unnamed Tributary to Catskill Creek	YS13	Perennial	Clay	4	1
222.6	Spring Brook	YS12	Perennial	Clay	55	3
222.7	Unnamed Tributary to Spring Brook	YS11	Perennial	Boulder/bedrock	3	0.5
222.9	Unnamed Tributary to Spring Brook	YS10	Perennial	Boulder/bedrock	5	0.3
223.1	Unnamed Tributary to Spring Brook	YS9	Perennial	Gravel-cobble/boulder	4	0.7
223.2	Unnamed Tributary to Spring Brook	YS8	Perennial	Silt-mud	3	0.5
223.4	Unnamed Tributary to Spring Brook	MS20	Intermittent	Silt-mud/sand	5	0.3
223.6	Unnamed Tributary to Mineral Brook	MS19	Perennial	Gravel-cobble	5	0.3
223.8	Unnamed Tributary to Mineral Brook	MS17	Intermittent	Gravel-cobble	5	0.2
223.8	Unnamed Tributary to Mineral Brook	MS18	Perennial	Gravel-cobble	3	0.2
223.9	Unnamed Tributary to Mineral Brook	MS16	Perennial	Gravel-cobble	8	0.2
224.1	Unnamed Tributary to Mineral Brook	YS7	Perennial	Sand/boulder	1	0.2
224.3	Unnamed Tributary to Mineral Brook	YS6	Perennial	Boulder	3	0.1
224.5	Unnamed Tributary to Mineral Brook	YS5	Perennial	Silt-mud/gravel-cobble	3	0.5
224.6	Unnamed Tributary to Mineral Brook	YS4	Perennial	Boulder	1.5	0.2
224.9	Post Creek	MS13	Perennial	Silt-mud	12	0.5
224.9	Unnamed Tributary to Post Creek	MS14	Perennial	Silt-mud	8	0.3
224.9	Unnamed Tributary to Post Creek	MS15	Ephemeral	Silt-mud	3	1.0
225.3	Unnamed Tributary to Hudson River	MS11	Intermittent	Gravel-cobble	3	0.3
225.4	Unnamed Tributary to Hudson River	MS10	Intermittent	Sand	3	0.2
225.9	Unnamed Tributary to Hudson River	MS9	Perennial	Silt-mud	4	0.3
226	Unnamed Tributary to Hudson River	MS7	Intermittent	Boulder	3	0.3

NAN-2009-01089-EYA
ATTACHMENT 7

Table 4-2 Summary of Waterbodies within the Study Area						
Approximate MP	**Waterbody Name**	**Waterbody Field ID**	**Flow Status**	**Substrate**	**Width[1] (feet)**	**Depth[1] (feet)**
226.1	Unnamed Tributary to Hudson River	MS8	Intermittent	Gravel-cobble	4	0.3
226.3	Unnamed Tributary to Hudson River	MS5	Perennial	Gravel-cobble	14	0.3
226.3	Unnamed Tributary to Hudson River	MS6a	Ephemeral	Silt-mud	4	0.1
226.3	Unnamed Tributary to Hudson River	MS6b	Ephemeral	Silt-mud	4	0.1
226.4	Unnamed Tributary to Hudson River	MS3	Intermittent	Gravel-cobble	8	0.1
226.4	Unnamed Tributary to Hudson River	MS4	Intermittent	Silt-mud	6	0.1
226.5	Unnamed Tributary to Hudson River	MS6	Intermittent	Silt-mud	4	0.1
227	Unnamed Tributary to Hudson River	MS2	Perennial	Gravel-cobble	10	0.2
227.3	Unnamed Tributary to Hudson River	MS1	Intermittent	Gravel-cobble	4	0.1
CSX Haverstraw Bay Bypass						
297.4	Cedar Pond Brook	YS1	Perennial	Silt-mud	50	4
297.9	Unnamed Tributary to Minisceongo Creek	YS2	Perennial	Bedrock	8	0.8
298.6	Minisceongo Creek	YS3	Intermittent	Silt-mud/gravel-cobble	45	1.5
299.9	Unnamed Tributary to Haverstraw Bay	YS4	Intermittent	Silt-mud/gravel-cobble	3	0.7

[1]Width and depth measurements are approximate.

Attachment 8 - Wetland Crossing List

NAN-2009-01089-EYA
ATTACHMENT 8

Table X: Wetland Impact Table

Approx. MP	Index Map Sheet	Town	Field ID	NYSDEC Wetland ID	NYSDEC Wetland Class	Cowardin Classification	HDD Crossing Length (feet)	Direct Bury Crossing Length (feet)	Temporary Impacts a/		Permanent Impacts b/		Total Impacts c/	
									Forested Wetland (square feet) d/	Non-Forested Wetland (square feet)	Forested Wetland (square feet) d/	Non-Forested Wetland (square feet)	Forested Wetland (square feet) d/	Non-Forested Wetland (square feet)
Route 22 Right-of-Way														
101.6	1	Dresden	A3611	N/A	N/A	PEM	16.6	-	-	-	-	-	-	-
102.2	3	Dresden	A3511	N/A	N/A	PEM	-	-	-	906.5	-	-	-	906.5
102.3	4	Dresden	A3411	N/A	N/A	PSS/RUB	-	-	-	163.4	-	-	-	163.4
103.0	5	Dresden	A3311	N/A	N/A	PEM	-	-	-	104.3	-	-	-	104.3
103.1	6	Dresden	A3211	N/A	N/A	PEM	-	-	-	935.6	-	-	-	935.6
103.2	6	Dresden	A3111	N/A	N/A	PEM/PSS	-	-	-	266.4	-	-	-	266.4
103.7	7	Dresden	A2911	N/A	N/A	PEM/PFO	-	-	1,233.5	-	-	-	1,233.5	-
103.8	7	Dresden	A2711	N/A	N/A	PEM	-	-	-	877.7	-	-	-	877.7
103.8	8	Dresden	A2811	N/A	N/A	PFO/RUB	-	-	1,435.5	-	-	-	1,435.5	-
103.9	8	Dresden	A2611	N/A	N/A	PEM/POW	-	-	-	1,048.7	-	-	-	1,048.7
104.4	9	Dresden	A2511	N/A	N/A	PFO	-	-	14.5	-	-	-	14.5	-
104.8	10	Dresden	A2411	N/A	N/A	PFO/RUB	-	-	28.7	527.2	-	-	28.7	527.2
104.9	10	Dresden	A2311	N/A	N/A	PEM	-	-	-	109.9	-	-	-	109.9
105.2	11	Dresden	A2211	N/A	N/A	PEM	-	-	-	2.5	-	-	-	2.5
105.7	13	Dresden	A2111	N/A	N/A	PEM	-	-	-	299.2	-	-	-	299.2
107.2	16	Dresden	A1811	N/A	N/A	PEM/PSS	-	-	-	293.2	-	-	-	293.2
107.3	17	Dresden	A1611	N/A	N/A	PEM	-	-	-	322	-	-	-	322
107.4	17	Dresden	A1511	N/A	N/A	PEM	-	-	-	338.2	-	-	-	338.2
108.1	19	Dresden	A1311	N/A	N/A	PEM	-	-	-	1,196.3	-	-	-	1,196.3
108.4	19	Dresden	A1111	N/A	N/A	PFO	-	-	365	-	-	-	365	-
108.4	20	Dresden	A1211	N/A	N/A	PSS	-	-	-	461	-	-	-	461

NAN-2009-01089-EYA
ATTACHMENT 8

Table X: Wetland Impact Table

Approx. MP	Index Map Sheet	Town	Field ID	NYSDEC Wetland ID	NYSDEC Wetland Class	Cowardin Classification	HDD Crossing Length (feet)	Direct Bury Crossing Length (feet)	Temporary Impacts a/		Permanent Impacts b/		Total Impacts c/	
									Forested Wetland (square feet) d/	Non-Forested Wetland (square feet)	Forested Wetland (square feet) d/	Non-Forested Wetland (square feet)	Forested Wetland (square feet) d/	Non-Forested Wetland (square feet)
108.5	20	Dresden	A1011	N/A	N/A	PSS	-	-	-	1,017.1	-	-	-	1,017.1
109.2	22	Dresden	A0511	N/A	N/A	PEM/PFO	-	-	23.4	-	-	-	23.4	-
109.6	23	Dresden	A0811	N/A	N/A	PEM	-	283.5	-	6,250.1	-	4,006	-	10,256.1
110.4	25	Whitehall	A0411	N/A	N/A	PEM	-	-	-	1,306	-	-	-	1,306
110.8	26	Whitehall	A0311	N/A	N/A	PEM/PSS	-	-	-	313.4	-	-	-	313.4
111.4	27	Whitehall	A0211	WH-2	1	PEM	-	-	-	361.4	-	-	-	361.4
111.7	28	Whitehall	A0111	WH-2	1	PEM/PSS	-	-	-	1,218.3	-	16.5	-	1,234.8
						Route 22 Right-of-Way Subtotal:	**16.6**	**283.5**	**3,100.6**	**18,318.4**	**-**	**4,022.5**	**3,100.6**	**22,340.9**
Canadian Pacific (CP) Railroad Right-of-Way														
113.5; 113.9; 116.4	33, 34, 40	Whitehall	B54	N/A	N/A	PEM/PSS/PFO	-	-	33,011.5	175,874	-	1,157.4	33,011.5	177,031.4
115.6	38	Whitehall	B55	N/A	N/A	PEM/PSS	-	-	-	4,396.2	-	960.6	-	5,356.8
117.5	43	Whitehall	B53	N/A	N/A	PEM	-	-	-	40,598.9	-	4	-	40,602.9
117.8	44	Whitehall	B52	N/A	N/A	PEM	-	-	-	5,002.6	-	-	-	5,002.6
118.1	45	Fort Ann	B51	N/A	N/A	PEM	-	-	-	64,340.7	-	0.5	-	64,341.2
118.6	46	Fort Ann	B50	N/A	N/A	PEM	-	-	-	433	-	-	-	433
118.9; 119.1	47/48	Fort Ann	B48	N/A	N/A	PEM/PFO	-	-	2,282.9	16,322.2	-	-	2,282.9	16,322.2
119.0	47	Fort Ann	B49	N/A	N/A	PEM	-	-	-	1,140.3	-	-	-	1,140.3
119.3	48	Fort Ann	F19	N/A	N/A	PFO	-	-	155	-	-	-	155	-
119.8; 120.4	49, 51	Fort Ann	F17	FA-13	1	PFO/POW	-	-	753.4	37,698	-	-	753.4	37,698
121.7	54	Fort Ann	F14	N/A	N/A	PFO	-	-	2,762.5	-	-	-	2,762.5	-
121.9	55	Fort Ann	F13	N/A	N/A	PFO	-	-	4,763.4	-	-	-	4,763.4	-

NAN-2009-01089-EYA
ATTACHMENT 8

Table X: Wetland Impact Table

Approx. MP	Index Map Sheet	Town	Field ID	NYSDEC Wetland ID	NYSDEC Wetland Class	Cowardin Classification	HDD Crossing Length (feet)	Direct Bury Crossing Length (feet)	Temporary Impacts a/		Permanent Impacts b/		Total Impacts c/	
									Forested Wetland (square feet) d/	Non-Forested Wetland (square feet)	Forested Wetland (square feet) d/	Non-Forested Wetland (square feet)	Forested Wetland (square feet) d/	Non-Forested Wetland (square feet)
122.0; 122.4	55	Fort Ann	F12	N/A	N/A	PSS/PFO	-	-	18,939.9	-	-	-	18,939.9	-
122.8	57	Fort Ann	F11	N/A	N/A	PSS/PFO	-	-	23,480.4	-	-	-	23,480.4	-
123.2	58	Fort Ann	F10	N/A	N/A	PSS/PFO	-	-	3,336.4	-	-	-	3,336.4	-
124.2; 124.3; 124.4; 125.2; 125.3; 125.6	59, 60, 61, 62, 64, 65	Fort Ann	F8	N/A	N/A	PEM/PSS/PFO	-	0.7	64,793	58,489.2	25.8	731.5	64,818.8	59,220.7
127.2; 127.5	69	Kingsbury	F4	N/A	N/A	PEM/PSS	-	-	-	52,923.3	-	-	-	52,923.3
128.4	71	Kingsbury	F2	N/A	N/A	PEM/PSS	-	-	-	46,518.2	-	39.7	-	46,557.9
129.6; 130.2	74, 76	Kingsbury	A54	N/A	N/A	PEM/PSS	-	-	-	177,328.5	-	-	-	177,328.5
131.9; 132.3	81, 82	Kingsbury	A2	N/A	N/A	PEM/PSS	-	-	-	76,512.5	-	-	-	76,512.5
133.3	85	Fort Edward	A5	N/A	N/A	PSS	-	267	-	3,212.8	-	2,895.9	-	6,108.7
133.6	86	Fort Edward	A6	N/A	N/A	PFO	-	-	372.6	-	-	-	372.6	-
135.8	91	Moreau	A14	N/A	N/A	PEM/PSS	-	-	-	1,288.3	-	-	-	1,288.3
135.9	92	Moreau	A15	N/A	N/A	PSS	-	-	-	377.6	-	-	-	377.6
136.0	92	Moreau	A16	N/A	N/A	PFO	-	-	766.2	-	-	-	766.2	-
136.1	92	Moreau	A17	N/A	N/A	PFO	-	-	2,096.8	-	-	-	2,096.8	-
136.7	94	Moreau	A23	N/A	N/A	PEM	-	8.1	-	44.3	-	104.6	-	148.9
136.9	94	Moreau	A24	N/A	N/A	PEM/PSS	-	-	-	1,913.9	-	528.8	-	2,442.7
137.1; 137.2	95	Moreau	A26	F-20	2	PEM/PSS/PFO	-	-	1,056.2	13,007.8	-	-	1,056.2	13,007.8
137.8	96	Moreau	A28	N/A	N/A	PFO	-	-	158	-	-	-	158	-
137.9	97	Moreau	A30	F-7	2	PSS	-	-	-	1,034.4	-	-	-	1,034.4
138.5	98	Moreau	A36	F-7	2	PSS	-	-	-	406.7	-	-	-	406.7

NAN-2009-01089-EYA
ATTACHMENT 8

Table X: Wetland Impact Table

Approx. MP	Index Map Sheet	Town	Field ID	NYSDEC Wetland ID	NYSDEC Wetland Class	Cowardin Classification	HDD Crossing Length (feet)	Direct Bury Crossing Length (feet)	Temporary Impacts a/		Permanent Impacts b/		Total Impacts c/	
									Forested Wetland (square feet) d/	Non-Forested Wetland (square feet)	Forested Wetland (square feet) d/	Non-Forested Wetland (square feet)	Forested Wetland (square feet) d/	Non-Forested Wetland (square feet)
138.8; 139.0	99, 100	Moreau	A38	F-7	2	PSS/PFO	-	15.4	18,915.7	28,318	272.3	1.2	19,188	28,319.2
139.8	102	Northumberland	A41	N/A	N/A	PSS	-	-	-	5,081.7	-	-	-	5,081.7
141.3	106	Northumberland	A47	N/A	N/A	PFO	-	-	4,567.5	-	-	-	4,567.5	-
141.4	106	Northumberland	A48	N/A	N/A	PFO	-	-	404	-	-	-	404	-
141.7; 141.8; 142.1	106, 107	Northumberland	A49	Q-32	1	PSS/PFO	-	-	21,734.4	1,755.7	32.6	-	21,767.1	1,755.7
142.2	108	Northumberland	A52	N/A	N/A	PFO	-	-	2,018.5	-	-	-	2,018.5	-
142.9	110	Northumberland	D7	GA-20	2	PEM	-	-	-	8,663.4	-	-	-	8,663.4
143.0	110	Northumberland	D6	N/A	N/A	PEM/PFO	-	-	1,254.2	-	-	-	1,254.2	-
143.1	111	Northumberland	D4	N/A	N/A	PFO	-	-	342.7	-	-	-	342.7	-
143.2	111	Northumberland	D3	N/A	N/A	PFO	-	-	17,230.3	-	-	-	17,230.3	-
143.4	111	Wilton	D2	N/A	N/A	PFO	-	-	732	-	-	-	732	-
145.9; 146.0	118	Wilton	B39	N/A	N/A	PEM/PFO	-	-	10,361.2	-	-	-	10,361.2	-
146.4	119	Wilton	B36	Q-11	1	PFO/PSS	10.6	-	-	-	-	-	-	-
149.5	127	Wilton	B1	S-7	2	PEM	-	-	-	124.3	-	-	-	124.3
150.5; 150.6; 150.7	130, 131	Greenfield	B3	S-19	1	PEM/PSS /PFO	-	73.3	565.7	28,510.2	-	3,001.9	565.7	31,512.1
151.4	132	Greenfield	B4	S-19	1	PEM/PSS	-	3.3	-	15,338.7	-	264.6	-	15,603.3
152.3	135	Saratoga Springs	B5	S-19	1	PEM/PSS	-	-	-	190.9	-	-	-	190.9
152.8	136	Saratoga Springs	B6	N/A	N/A	PEM/PSS	-	-	-	9,918.5	-	9.3	-	9,927.8
154.9	141	Saratoga Springs	D9	S-21	3	PEM	-	1,402.3	-	86,021.6	-	19,867.9	-	105,889.5
155.5	143	Saratoga Springs	B47	S-21	3	PEM/PSS/PFO	-	45.6	642.1	-	594.1	-	1,236.2	-
155.9	144	Saratoga Springs	B45	N/A	N/A	PEM	-	1,899.2	-	4,410.6	-	22,780.9	-	27,191.5

NAN-2009-01089-EYA
ATTACHMENT 8

Table X: Wetland Impact Table

Approx. MP	Index Map Sheet	Town	Field ID	NYSDEC Wetland ID	NYSDEC Wetland Class	Cowardin Classification	HDD Crossing Length (feet)	Direct Bury Crossing Length (feet)	Temporary Impacts a/		Permanent Impacts b/		Total Impacts c/	
									Forested Wetland (square feet) d/	Non-Forested Wetland (square feet)	Forested Wetland (square feet) d/	Non-Forested Wetland (square feet)	Forested Wetland (square feet) d/	Non-Forested Wetland (square feet)
157.0	146	Saratoga Springs	B44	N/A	N/A	PEM/PFO	-	313.1	10,031	-	3,594.3	-	13,625.3	-
157.1	147	Saratoga Springs	B41	N/A	N/A	PFO	-	-	11,762.1	-	204.3	-	11,966.4	-
157.5; 158.0	148, 149	Saratoga Springs	B10	N/A	N/A	PFO	252.2	248.8	18,784	-	2,898.6	-	21,682.6	-
158.3	150	Milton	B17	N/A	N/A	PFO	-	53.8	3,739.8	-	699.6	-	4,439.4	-
158.7	151	Milton	B16	N/A	N/A	PFO	-	-	14,919	-	-	-	14,919	-
159.0	152	Ballston	B18	N/A	N/A	PEM/PSS	-	133.9	-	15,675.5	-	3,920.4	-	19,595.8
159.1	152	Ballston	B20	N/A	N/A	PEM/PSS	-	-	-	281.6	-	-	-	281.6
159.3	153	Ballston	B21	R-50	3	PEM	-	-	-	801.6	-	-	-	801.6
159.5	154	Ballston	B23	N/A	N/A	PEM	174.7	-	-	560.3	-	347.8	-	908.2
160.1; 160.4	154, 156	Ballston	B25	R-3	3	PEM/PSS/PFO	-	107.7	12,688	36,707	251.4	6,805.7	12,939.3	43,512.7
160.7	156	Ballston	B28	N/A	N/A	PEM	-	-	-	188.8	-	-	-	188.8
160.9	157	Ballston	B29	N/A	N/A	PEM/PSS	-	-	-	1,877.7	-	56.3	-	1,934
161.2	157	Ballston	B30	N/A	N/A	PEM/PSS	-	605.8	-	10,445.5	-	6,881.1	-	17,326.6
161.6	159	Ballston	B31	R-11	2	PEM	-	-	-	17,974.4	-	1,151.2	-	19,125.6
161.8	159	Ballston	B32	N/A	N/A	PEM	-	-	-	10,108.9	-	1,371.8	-	11,480.6
162.9	162	Ballston	B-C1	N/A	N/A	PEM	-	675.4	-	5,965.6	-	8,427.8	-	14,393.4
162.9; 163.0; 163.1	162, 163	Ballston	C1	N/A	N/A	PEM/PSS	-	528	-	16,485.3	-	6,229.3	-	22,714.7
163.4	163	Ballston	C2	N/A	N/A	PEM	27.4	-	-	-	-	-	-	-
163.4	164	Ballston	C4	N/A	N/A	PEM	-	350.6	-	4,397.3	-	3,197.6	-	7,594.8
163.7	164	Ballston	C5	N/A	N/A	PEM	-	-	-	991.4	-	123.2	-	1,114.6
164.4	166	Ballston	C8	R-18	2	PEM	8	68.4	-	24,785.7	-	4,230.2	-	29,015.9
164.9	167	Ballston	C15	R-18	2	PFO	-	108.6	18,343.5	-	1,441	-	19,784.5	-

NAN-2009-01089-EYA
ATTACHMENT 8

Table X: Wetland Impact Table

Approx. MP	Index Map Sheet	Town	Field ID	NYSDEC Wetland ID	NYSDEC Wetland Class	Cowardin Classification	HDD Crossing Length (feet)	Direct Bury Crossing Length (feet)	Temporary Impacts a/		Permanent Impacts b/		Total Impacts c/	
									Forested Wetland (square feet) d/	Non-Forested Wetland (square feet)	Forested Wetland (square feet) d/	Non-Forested Wetland (square feet)	Forested Wetland (square feet) d/	Non-Forested Wetland (square feet)
167.1	173	Clifton Park	C29	B-31	2	PEM	-	-	-	2,352.2	-	642	-	2,994.2
167.5	174	Clifton Park	C31	N/A	N/A	PEM	-	-	-	10,504.3	-	-	-	10,504.3
168.2	176	Clifton Park	C35	N/A	N/A	PEM/PSS	-	-	-	8,397.6	-	-	-	8,397.6
170.0; 170.2	181	Glenville	C42	S-107	2	PEM/PSS/PFO	67.5	867.9	10,693.4	53,073.3	1,165.3	11,082.6	11,858.7	64,155.9
170.5	182	Glenville	X01	N/A	N/A	PSS/PFO	-	1,002.2	16,039.5	16,853.2	4,022.6	8,075.2	20,062	24,928.4
171.4	185	Glenville	C44	S-112	2	PEM	-	-	-	282.7	-	-	-	282.7
174.8	193	Schenectady	C46	N/A	N/A	PEM	-	-	-	3,316.9	-	-	-	3,316.9
175.0	193	Schenectady	C48	N/A	N/A	PEM	-	100.4	-	814.4	-	1,302.5	-	2,116.8
175.3	194	Schenectady	C56	N/A	N/A	PEM	-	278.4	-	6,131.2	-	3,360.1	-	9,491.3
CP Railroad Right-of-Way Subtotal:							**540.4**	**9,157.9**	**354,496.8**	**1,216,169.4**	**15,201.9**	**119,553.6**	**369,698.6**	**1,335,722.8**
CSX Railroad Right-of-Way – Rotterdam to Catskill, NY														
178.4	202	Rotterdam	E2	N/A	N/A	PSS	-	-	-	5,568.7	-	-	-	5,568.7
178.8; 178.9	203	Rotterdam	E3	N/A	N/A	PEM/PFO	-	331.6	14,381.2	14,470.3	3,914.4	3,050.3	18,295.6	17,520.6
179.1	204	Rotterdam	E4	N/A	N/A	PEM	-	-	-	25,741.6	-	780.6	-	26,522.3
179.5	205	Rotterdam	E5	N/A	N/A	PEM/PFO	-	66.5	13,960	120.4	132.2	2,995.9	14,092.1	3,116.3
179.7; 179.8	205, 206	Rotterdam	E7	N/A	N/A	PEM/PSS	-	51.2	-	10,797.8	-	1,497.7	-	12,295.5
180.0; 180.1; 180.3	206, 207	Rotterdam	E9	S-117	2	PEM/PSS	-	-	-	61,877.8	-	4,111.6	-	65,989.3
180.6; 180.7	208	Guilderland	E10	N/A	N/A	PEM/PSS	13.1	196.4	-	7,226.5	-	2,253.2	-	9,479.8
180.8	208	Guilderland	E12	N/A	N/A	PEM/PFO	224.2	415.6	15,303.1	-	4,161.1	199.9	19,464.2	199.9
181.2; 181.6; 181.7; 181.8	209, 210	Guilderland	E15	N/A	N/A	PEM/PSS/PFO	589	184	12,258.2	6,090.5	2,038	6,439.9	14,296.1	12,530.4

NAN-2009-01089-EYA
ATTACHMENT 8

Table X: Wetland Impact Table

Approx. MP	Index Map Sheet	Town	Field ID	NYSDEC Wetland ID	NYSDEC Wetland Class	Cowardin Classification	HDD Crossing Length (feet)	Direct Bury Crossing Length (feet)	Temporary Impacts a/		Permanent Impacts b/		Total Impacts c/	
									Forested Wetland (square feet) d/	Non-Forested Wetland (square feet)	Forested Wetland (square feet) d/	Non-Forested Wetland (square feet)	Forested Wetland (square feet) d/	Non-Forested Wetland (square feet)
182.0	212	Guilderland	E95	N/A	N/A	PEM	-	4.9	-	411.1	-	85.6	-	496.6
182.1; 182.2	212	Guilderland	E96	N/A	N/A	PEM/PSS/PFO	-	78.9	208.5	4,141.1	-	962.4	208.5	5,103.5
182.4; 182.5	213	Guilderland	E97	N/A	N/A	PEM/PSS	-	2.3	-	964.6	-	124.9	-	1,089.5
183.3	215	Guilderland	E80	N/A	N/A	PEM/PSS	-	-	-	1,139.8	-	-	-	1,139.8
183.4	215	Guilderland	E79	N/A	N/A	PSS/PFO	-	-	6,124.8	-	-	-	6,124.8	-
183.5	215	Guilderland	E77	N/A	N/A	PSS	-	-	-	5,319.7	-	-	-	5,319.7
183.8	216	Guilderland	E75	N/A	N/A	PFO	-	-	1,079.1	-	-	-	1,079.1	-
184.2; 184.2	217	Guilderland	E17	N/A	N/A	PSS/PFO/POW	-	79.9	721.1	13,056	-	1,180.5	721.1	14,236.5
185.5; 186.2; 186.2; 186.3	221, 222	Guilderland	E21	N/A	N/A	PEM/PSS/PFO	-	20.5	8,817.3	61,995.3	-	1,076.5	8,817.3	63,071.8
186.5; 186.7; 186.9; 186.9	223, 224	Guilderland	E24	N/A	N/A	PEM/PSS/PFO	-	552.6	17,695	25,776.1	4,187.3	3,263.7	21,882.2	29,039.8
187.3	225	Guilderland	E26	N/A	N/A	PEM/PSS	-	-	-	9,838.6	-	696.9	-	10,535.5
187.5; 187.7; 187.8	226	New Scotland	E28	V-52	2	PSS/PFO	-	475.1	3,240.8	15,424.9	1,259.7	5,297	4,500.5	20,722
188.0; 188.0	227	New Scotland	E29	N/A	N/A	PSS/PFO	-	16.2	991.7	6,695.2	0.1	774.2	991.8	7,469.4
189.2	230	New Scotland	E31	N/A	N/A	PSS	-	-		2,013.4	-	-	-	2,013.4
189.8	232	New Scotland	E33	N/A	N/A	PEM/PSS/PFO	-	-	1,791.8	1,309.5	30.3	-	1,822.1	1,309.5
190.4	233	New Scotland	E35	N/A	N/A	PFO	-	-	3,111.6	-	-	-	3,111.6	-
190.7	234	New Scotland	E37	N/A	N/A	PFO	-	-	5,272.2	-	58.5	-	5,330.7	-
191.1	235	New Scotland	E39	N/A	N/A	PEM	-	345.4	-	11,289.7	-	4,377.6	-	15,667.3
191.5; 191.6	236	New Scotland	E43	N/A	N/A	PEM/PFO	-	-	4,450	1,003.1	-	-	4,450	1,003.1

NAN-2009-01089-EYA
ATTACHMENT 8

Table X: Wetland Impact Table

Approx. MP	Index Map Sheet	Town	Field ID	NYSDEC Wetland ID	NYSDEC Wetland Class	Cowardin Classification	HDD Crossing Length (feet)	Direct Bury Crossing Length (feet)	Temporary Impacts a/		Permanent Impacts b/		Total Impacts c/	
									Forested Wetland (square feet) d/	Non-Forested Wetland (square feet)	Forested Wetland (square feet) d/	Non-Forested Wetland (square feet)	Forested Wetland (square feet) d/	Non-Forested Wetland (square feet)
194.0	243	Bethlehem	E51	N/A	N/A	PEM	-	-	-	9.8	-	-	-	9.8
194.1	243	Bethlehem	E52	N/A	N/A	PEM	-	-	-	877.8	-	94.7	-	972.5
194.1	243	Bethlehem	E59	N/A	N/A	PEM	-	17.8	-	1,386.6	-	231.8	-	1,618.4
194.2	243	Bethlehem	E58	N/A	N/A	PEM	18.5	1,962.2	-	15,570.3	-	26,527.1	-	42,097.4
197.2	250	Bethlehem	E104	N/A	N/A	PEM	-	-	-	38,523.1	-	-	-	38,523.1
199.2	253	Bethlehem	M71/ E101	N/A	N/A	PEM/PSS	36.5	161.8	-	57,844.8	-	8,899.7	-	66,744.4
199.3	256	Bethlehem	M70	N/A	N/A	PFO	-	-	1,235.9	-	-	-	1,235.9	-
199.6	257	Coeymans	M69	N/A	N/A	PEM/PFO	-	439.9	16,473.2	-	3,499.1	1,653.3	19,972.3	1,653.3
199.8	257	Coeymans	M67	N/A	N/A	PEM/PSS/PFO	-	1,592.2	67,714.2	-	19,234.4	-	86,948.6	-
200.3	259	Coeymans	M65	N/A	N/A	PEM/PSS/PFO	-	-	5,324.7	939	-	-	5,324.7	939
200.3	259	Coeymans	M66	N/A	N/A	PEM/PFO	-	58.7	1,453.7	-	574.7	-	2,028.4	-
200.8	260	Coeymans	M63	N/A	N/A	PEM/PSS/PFO	-	264.4	6,606.9	1,285	2,979.1	438.1	9,586	1,723.1
201.1	261	Coeymans	M62	N/A	N/A	PEM	-	154.3	-	7,739	-	1,954.4	-	9,693.5
201.1	261	Coeymans	Y36	N/A	N/A	PEM	-	-	-	170.2	-	-	-	170.2
201.2	261	Coeymans	M61	N/A	N/A	PEM/PSS/PFO/ POW	-	3,421	7,458.2	94,038	10.7	31,812.2	7,468.9	125,850.2
202.0	264	Coeymans	Y34	N/A	N/A	PEM/PSS	-	132.6	-	3,486.2	-	688.5	-	4,174.7
202.2	264	Coeymans	M60	N/A	N/A	PEM/PFO	-	677.1	32,424.8	-	9,747.5	-	42,172.3	-
202.4	265	Coeymans	M59	N/A	N/A	PEM/PSS/PFO	-	43.9	2,926.9	-	537.3	-	3,464.2	-
202.6	265	Coeymans	Y33	N/A	N/A	PEM	-	32.6	-	19,632.9	-	640.5	-	20,273.4
203.0	266	Coeymans	M58	N/A	N/A	PEM/PSS	-	-	-	3,104.4	-	501.5	-	3,605.9
203.1	266	Coeymans	M57	N/A	N/A	PEM/PFO	-	216.2	1,186.8	-	2,717.8	-	3,904.5	-
203.9	268	Coeymans	M56	N/A	N/A	PEM/PSS/PFO	-	-	368.9	-	-	-	368.9	-

NAN-2009-01089-EYA
ATTACHMENT 8

Table X: Wetland Impact Table

Approx. MP	Index Map Sheet	Town	Field ID	NYSDEC Wetland ID	NYSDEC Wetland Class	Cowardin Classification	HDD Crossing Length (feet)	Direct Bury Crossing Length (feet)	Temporary Impacts a/		Permanent Impacts b/		Total Impacts c/	
									Forested Wetland (square feet) d/	Non-Forested Wetland (square feet)	Forested Wetland (square feet) d/	Non-Forested Wetland (square feet)	Forested Wetland (square feet) d/	Non-Forested Wetland (square feet)
204.4	270	New Baltimore	M53	N/A	N/A	PEM	-	822.4	-	10,101.7	-	6,453.7	-	16,555.4
204.6	270	New Baltimore	M52	N/A	N/A	PEM	130.8	-	-	1,663.5	-	880.3	-	2,543.7
204.9	271	New Baltimore	Y32	N/A	N/A	PEM/PSS	-	-	-	1,219.7	-	-	-	1,219.7
205.1	272	New Baltimore	Y31	N/A	N/A	PEM/PSS	-	-	-	3,409	-	-	-	3,409
205.4	272	New Baltimore	Y30	N/A	N/A	PEM	-	-	-	3,492.1	-	-	-	3,492.1
206.1	274	New Baltimore	M48	N/A	N/A	PSS	-	-	-	710.2	-	50	-	760.2
206.5	275	New Baltimore	M47	N/A	N/A	PEM/PSS	27.9	396.9	-	1,939.2	-	5,152.8	-	7,091.9
208.0	279	New Baltimore	Y27	N/A	N/A	PEM/PSS	-	14.7	-	143.4	-	196.6	-	340
208.4	280	New Baltimore	Y26	N/A	N/A	PEM	155.5	-	-	-	-	93.8	-	93.8
208.8	281	New Baltimore	M42	N/A	N/A	PEM/PSS	-	386.3	-	2,164.2	-	5,074.1	-	7,238.3
208.9	282	New Baltimore	M41	N/A	N/A	PEM/PSS/PFO	-	292.7	7,558.5	-	3,845.6	-	11,404.1	-
209.0	282	New Baltimore	M40	N/A	N/A	PSS	-	50.4	-	2,372.4	-	639.7	-	3,012.1
209.0	282	New Baltimore	Y24	N/A	N/A	PEM/PSS	-	95.9	-	3,323.5	-	1,233.4	-	4,556.9
209.8	284	New Baltimore	Y22	N/A	N/A	PEM	-	269.7	-	359.7	-	2,979.5	-	3,339.2
210.4	286	Coxsackie	M36	N/A	N/A	PFO	-	219	851.5	-	2,950.2	-	3,801.6	-
210.6	286	Coxsackie	M35	N/A	N/A	PSS	-	37.6	-	19.1	-	334	-	353
210.7	287	Coxsackie	M34	HN-101	1	PEM/PFO	-	138	160.7	-	718	1,000	878.8	1,000
210.9	287	Coxsackie	Y21	N/A	N/A	PEM	-	133.4	-	1,026.3	-	1,728.8	-	2,755.1
211.2	288	Coxsackie	Y20	N/A	N/A	PEM	18.5	1,262.5	-	8,738.2	-	16,996.3	-	25,734.5
211.7	289	Coxsackie	M33	N/A	N/A	PEM/PFO	4.4	179.9	11852	34.5	2286.8	187.7	14138.8	222.2
211.8	289	Coxsackie	Y19	N/A	N/A	PEM	12.5	23.8	-	266.7	-	583.7	-	850.4
212.3	290	Coxsackie	Y18	N/A	N/A	PEM	-	2,500.2	-	55,108.8	-	28,350.7	-	83,459.4

NAN-2009-01089-EYA
ATTACHMENT 8

Table X: Wetland Impact Table

Approx. MP	Index Map Sheet	Town	Field ID	NYSDEC Wetland ID	NYSDEC Wetland Class	Cowardin Classification	HDD Crossing Length (feet)	Direct Bury Crossing Length (feet)	Temporary Impacts a/		Permanent Impacts b/		Total Impacts c/	
									Forested Wetland (square feet) d/	Non-Forested Wetland (square feet)	Forested Wetland (square feet) d/	Non-Forested Wetland (square feet)	Forested Wetland (square feet) d/	Non-Forested Wetland (square feet)
213.5	292	Coxsackie	M32	N/A	N/A	PEM/PSS/PFO	-	11.6	56,130.8	-	6,327.6	-	62,458.3	-
214.5; 216.0	296, 299	Coxsackie/ Athens	Y16	HN-108	1	PEM	854.1	1,627.6	-	276,129.4	-	40,961	-	317,090.4
216.8	303	Athens	Y17	HN-108	1	PEM	-	-	-	719.2	-	-	-	719.2
220.2	311	Catskill	Y15	N/A	N/A	PEM	-	-	-	37,575.7	-	-	-	37,575.7
220.4	312	Catskill	Y14	N/A	N/A	PEM	-	-	-	2,055.3	-	-	-	2,055.3
220.8	313	Catskill	Y13	N/A	N/A	PEM	-	-	-	1,562	-	242.5	-	1,804.5
220.9	313	Catskill	M29	N/A	N/A	PEM	-	36.5	-	6,019.5	-	905.8	-	6,925.3
222.0	316	Catskill	M25	N/A	N/A	PEM/PFO	-	17	952.8	-	348.3	-	1,301.2	-
222.5	318	Catskill	M24	N/A	N/A	PEM/PFO	-	1.3	4,844.9	-	100.6	-	4,945.5	-
223.2	319	Catskill	Y11	N/A	N/A	PEM	-	627.8	-	6,158.5	-	4,535.6	-	10,694.2
223.6	321	Catskill	M21	N/A	N/A	PEM	-	-	-	11,045	-	41.6	-	11,086.6
223.8	321	Catskill	M20	N/A	N/A	PFO	-	-	242.8	-	-	-	242.8	-
224.1	322	Catskill	M19	N/A	N/A	PFO	-	-	2,133.3	-	-	-	2,133.3	-
224.3	323	Catskill	Y10	N/A	N/A	PEM	-	-	-	10,013.7	-	93.2	-	10,106.9
224.5	323	Catskill	Y9	N/A	N/A	PEM	-	-	-	852.2	-	-	-	852.2
225.0	324	Catskill	M16	N/A	N/A	PEM	-	-	-	928.4	-	-	-	928.4
225.2	325	Catskill	M15	N/A	N/A	PEM	-	-	-	485.7	-	795.3	-	1,281
226.0	327	Catskill	M12	N/A	N/A	PEM	-	67.6	-	3,137.2	-	1,189.5	-	4,326.7
226.2	328	Catskill	M11	N/A	N/A	PEM/PFO	10.9	-	904.5	-	-	-	904.5	-
226.3	328	Catskill	M9	N/A	N/A	PSS/PFO	-	25.1	8,058.4	-	655.8	-	8,714.2	-
226.5	328	Catskill	M8	N/A	N/A	PEM/PFO	-	14.4	1,428	-	325.4	-	1,753.4	-
227.1	330	Catskill	M3	N/A	N/A	PEM/PSS	-	234.3		5,491.3	-	3,493.7	-	8,985

NAN-2009-01089-EYA
ATTACHMENT 8

Table X: Wetland Impact Table

Approx. MP	Index Map Sheet	Town	Field ID	NYSDEC Wetland ID	NYSDEC Wetland Class	Cowardin Classification	HDD Crossing Length (feet)	Direct Bury Crossing Length (feet)	Temporary Impacts a/		Permanent Impacts b/		Total Impacts c/	
									Forested Wetland (square feet) d/	Non-Forested Wetland (square feet)	Forested Wetland (square feet) d/	Non-Forested Wetland (square feet)	Forested Wetland (square feet) d/	Non-Forested Wetland (square feet)
CSX Railroad Right-of-Way – Haverstraw Bay Bypass, NY														
296.1	335	Stony Point	Y1	HS-2	1	PEM	266.6	-	-	-	-	-	-	-
298.5	342	Haverstraw	Y4	N/A	N/A	PEM	-	-	-	1,161.6	-	62.5	-	1,224.2
CSX Railroad Right-of-Way Subtotal:							**2,362.5**	**21,482.4**	**347,698.8**	**996,305.7**	**72,640.5**	**236,866**	**420,339.9**	**1,233,171.6**
Total Impacts									**705,296.2 (16.2 acres)**	**2,230,793.5 (51.2 acres)**	**87,842.4 (2.0 acres)**	**360,442.1 (8.3 acres)**	**793,139.1 (18.2 acres)**	**2,591,235.3 (59.5 acres)**

a/ Temporary Impacts are based on an approximate 31- to 33-foot temporary workspace encompassing activities such as trenching, access, equipment staging, and spoil storage.
b/ Permanent Impacts are based on an approximate 13- to 17- foot permanent vegetation maintenance corridor.
c/ Total Impacts include both temporary and permanent impacts combined.
d/ If multiple Cowardin classifications exist for any given wetland identified as containing PFO (i.e. PFO/PSS), impacts were assigned to forested wetland.

Attachment 9 - Mohawk Hudson Land Conservancy Preservation Sites

ATTACHMENT 9
MOHAWK HUDSON LAND CONSERVANCY PRESERVATION SITES

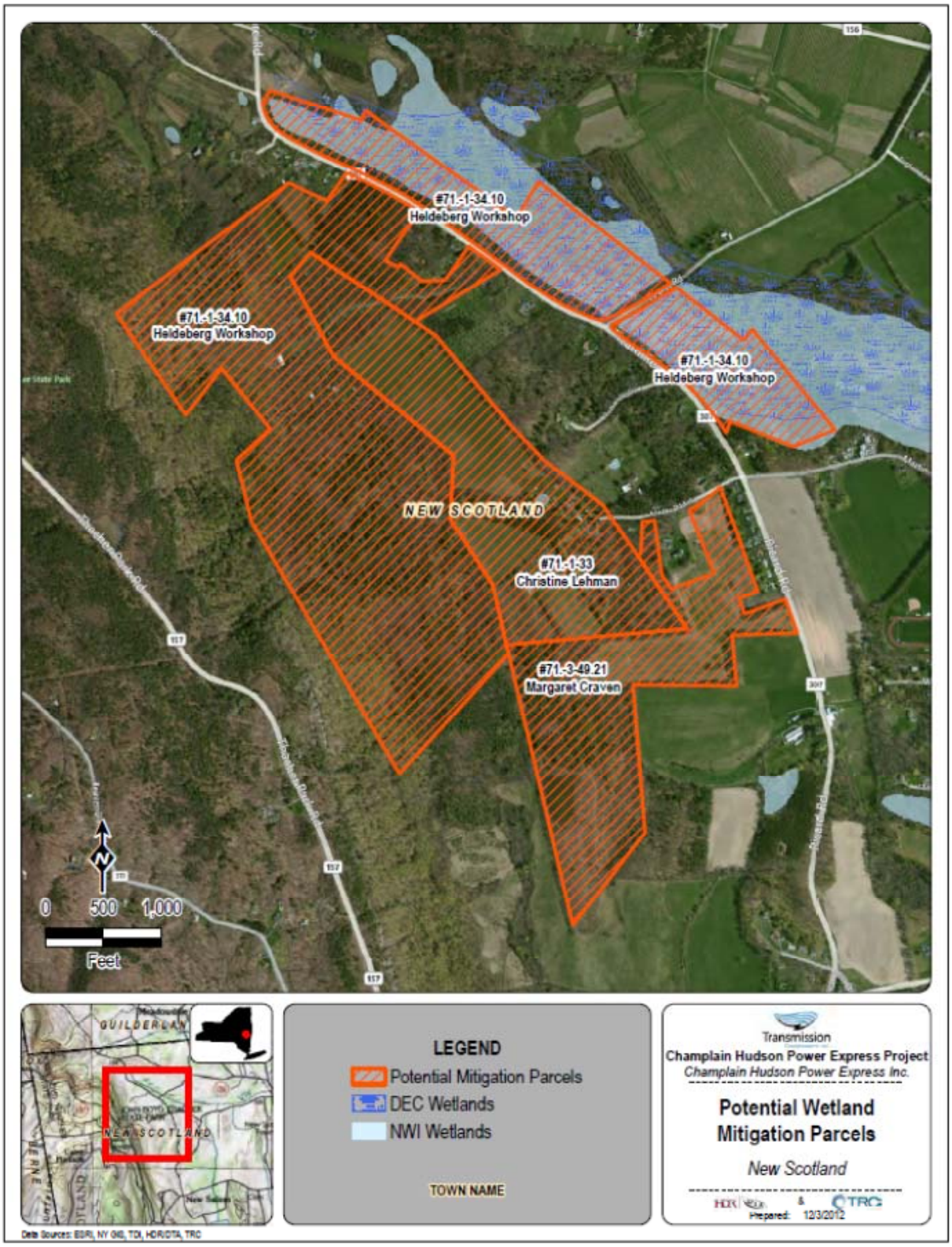

Attachment 10 - The Nature Conservancy Preservation Sites
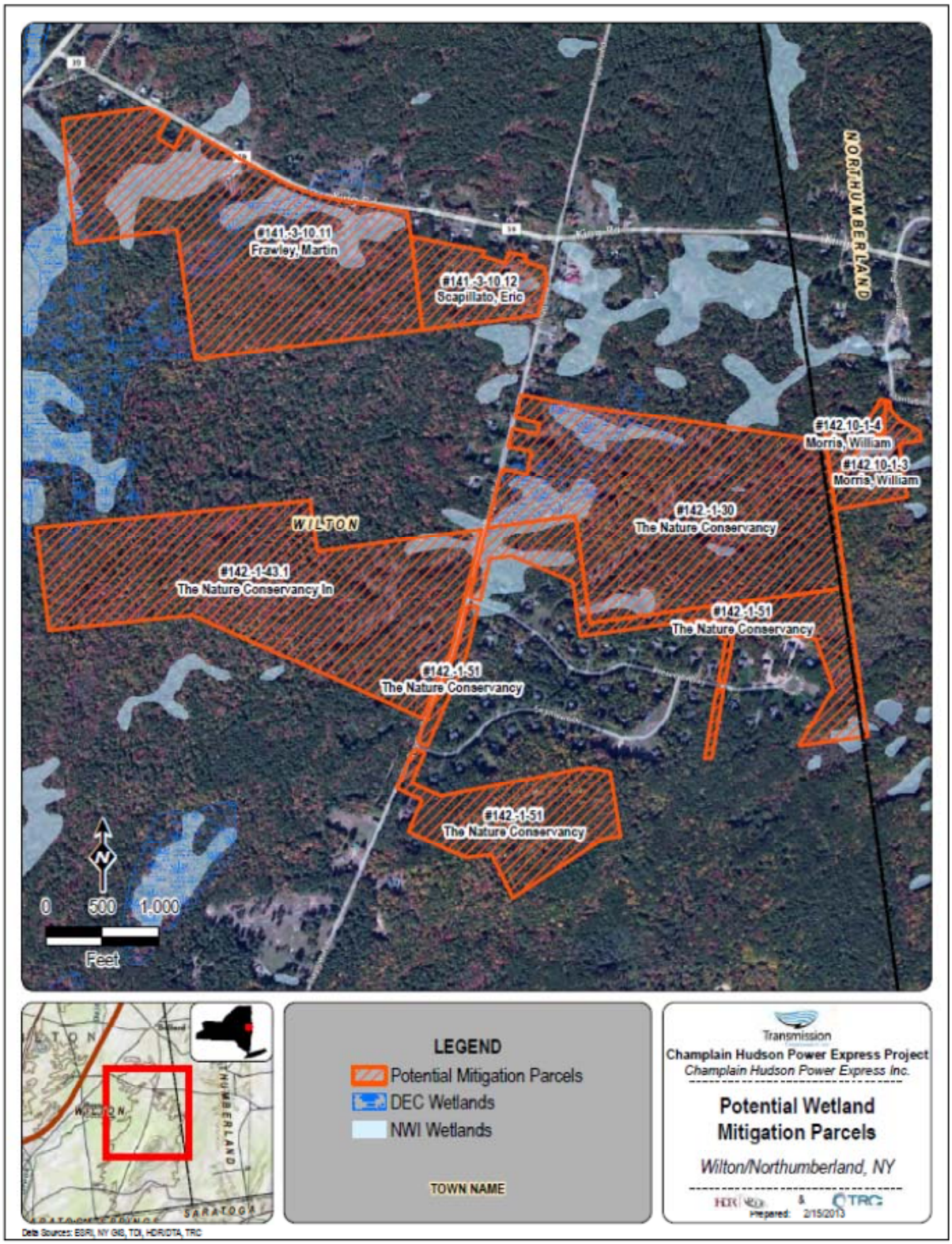
ATTACHMENT 10
THE NATURE CONSERVANCY PRESERVATION SITES