PUBLIC NOTICE

US Army Corps
of Engineers
New York District
Jacob K. Javits Federal Building
New York, N.Y. 10278-0090
ATTN: Regulatory Branch

In replying refer to:
Public Notice Number: NAN-2013-01324-ETA
Issue Date: December 20, 2014
Expiration Date: January 20, 2015

To Whom It May Concern:

The New York District, Corps of Engineers has received an application for a Department of the Army permit pursuant to Section 10 of the Rivers and Harbors Act of 1899 (33 U.S.C. 403), and Section 404 of the Clean Water Act (33 U.S.C. 1344).

APPLICANT: Greenpoint Landing Developers, LLC
535 Madison Avenue
New York, NY 10022

ACTIVITY: Construction of fixed pier and ferry landing; and installation of riprap

WATERWAY: East River

LOCATION: Borough of Brooklyn, Kings County, New York.

A detailed description and plans of the applicant's activity are enclosed to assist in your review.

The decision whether to issue a permit will be based on an evaluation of the probable impact including cumulative impacts of the proposed activity on the public interest. That decision will reflect the national concern for both protection and utilization of important resources. The benefit which reasonably may be expected to accrue from the proposal must be balanced against its reasonably foreseeable detriments. All factors which may be relevant to the proposal will be considered including the cumulative effects thereof; among those are conservation, economics, aesthetics, general environmental concerns, wetlands, historic properties, fish and wildlife values, flood hazards, floodplain values, land use, navigation, shoreline erosion and accretion, recreation, water supply and conservation, water quality, energy needs, safety, food and fiber production, mineral needs, considerations of property ownership and, in general, the needs and welfare of the people.

The Corps of Engineers is soliciting comments from the public; Federal, state, and local agencies and officials; Indian Tribes; and other interested parties in order to consider and evaluate the impacts of this proposed activity. Any comments received will be considered by the Corps of Engineers to determine whether to issue, modify, condition or deny a permit for this proposal. To make this decision, comments are used to assess impacts on endangered species, historic properties, water quality, general environmental effects, and the other public interest factors listed above. Comments are used in preparation of an Environmental Assessment and/or an Environmental Impact Statement pursuant to the National Environmental Policy Act. Comments are also used to determine the need for a public hearing and to determine the overall public interest of the proposed activity.

ALL COMMENTS REGARDING THE PERMIT APPLICATION MUST BE PREPARED IN WRITING AND MAILED TO REACH THIS OFFICE BEFORE THE EXPIRATION DATE OF THIS NOTICE, otherwise, it will be presumed that there are no objections to the activity. Comments provided will become a part of the public record for this action.

Any person may request, in writing, before this public notice expires, that a public hearing be held to collect information necessary to consider this application. Requests for public hearings shall state, with particularity, the reasons why a public hearing should be held. It should be noted that information submitted by mail is considered just as carefully in the permit decision process and bears the same weight as that furnished at a public hearing.

Our preliminary determination is that the activity for which authorization is sought herein is not likely to affect any Federally endangered or threatened species or their critical habitat. However, pursuant to Section 7 of the Endangered Species Act (16 U.S.C. 1531), the District Engineer is consulting with the appropriate Federal agency to determine the presence of and potential impacts to listed species in the project area or their critical habitat.

The Magnuson-Stevens Fishery Conservation and Management Act, as amended by the Sustainable Fisheries Act (Public Law 104-267), requires all Federal agencies to consult with the National Oceanic and Atmospheric Administration Fisheries Service (NOAA/FS) on all actions, or proposed actions, permitted, funded, or undertaken by the agency, that may adversely affect Essential Fish Habitat (EFH). The proposed work, fully described in the attached work description, could cause the disruption of habitat for various lifestages of some EFH-designated species as a result of a temporary increase in turbidity during construction. However, the New York District has made the preliminary determination that the site-specific adverse effects are not likely to be substantial because it is expected that fish populations would avoid the small area of disturbance. Further consultation with NOAA/FS regarding EFH impacts and conservation recommendations being conducted and will be concluded prior to the final decision.

Based upon a review of the latest published version of the National Register of Historic Places, there are no known sites eligible for, or included in, the Register within the permit area. Presently unknown archeological, scientific, prehistorical, or historical data may be lost by work accomplished under the required permit.

Reviews of activities pursuant to Section 404 of the Clean Water Act will include application of the guidelines promulgated by the Administrator, U.S. Environmental Protection Agency, under authority of Section 404 (b) of the Clean Water Act and the applicant will obtain a water quality certificate or waiver from the appropriate state agency in accordance with Section 401 of the Clean Water Act prior to a permit decision.

Pursuant to Section 307 (c) of the Coastal Zone Management Act of 1972 as amended [16 U.S.C. 1456 (c)], for activities under consideration that are located within the coastal zone of a state which has a federally approved coastal zone management program, the applicant has certified in the permit application that the activity complies with, and will be conducted in a manner that is consistent with, the approved state coastal zone management program. By this public notice, we are requesting the state's concurrence with, objection to, or waiver of the applicant's certification. No permit decision will be made until one of these actions occur. For activities within the coastal zone of New York State, the applicant's certification and accompanying information is available from the Consistency Coordinator, New York State Department of State, Division of Coastal Resources and Waterfront Revitalization, Coastal Zone Management Program, One Commerce Plaza, 99 Washington Avenue, Albany, New York 12231, Telephone (518) 474-6000. Comments regarding the applicant's certification, and copies of any letters to this office commenting upon this proposal, should be so addressed.

In addition to any required water quality certificate and coastal zone management program concurrence, the applicant has requested the following governmental authorization for the activity under consideration:

- New York State Department of Environmental Conservation

It is requested that you communicate the foregoing information concerning the activity to any persons known by you to be interested and who did not receive a copy of this notice. If you have any questions concerning this application, you may contact this office at 917-790-8521 and ask for Frank Tangorra.

In order for us to better serve you, please complete our Customer Service Survey located at http://www.nan.usace.army.mil/Missions/Regulatory/CustomerSurvey.aspx.

For more information on New York District Corps of Engineers programs, visit our website at http://www.nan.usace.army.mil.

For
Jodi M. McDonald
Chief, Regulatory Branch

Enclosures

WORK DESCRIPTION

The applicant, Greenpoint Landing Developers, LLC, has requested Department of the Army authorization to place riprap as part of shoreline revitalization and construct a fixed pier and ferry landing in the East River, Brooklyn, Kings County, New York.

This project would involve the placement of a total of approximately 1520 linear feet of riprap, 3151 cubic yards of which would be placed below Spring High Water; installation of headwalls for three storm water outfalls; installation of two new storm water outfalls; construction of new a 35-foot-wide by 75-foot-long ferry landing with an 8-foot-wide by 45-foot-long gangway and a 10-foot-wide by 80-foot-long queuing area; and construction 45-foot-wide by 495-foot-long fixed pier. The ferry landing will be installed separate from the rebuilt pier, to the north of the NYCDEP dock, at the shoreline in the vicinity of the intersection of Clay Street and Franklin Street. The new pier would be in the location of the existing Green Street Pier, which would be removed.

The applicant has stated that they have avoided, minimized, and mitigated for impacts proposed to the maximum extent practicable by limiting construction to the smallest area practicable; utilization of existing structures; minimization of placement of fill, and stabilization of approximately 1520 linear feet of rip rap between Block 2520 Lot 57 and Block 2472 Lot 100, excluding the existing NYC Dept. of Environmental Protection dock.

The applicant has stated that the existing shoreline revetment consists of miscellaneous stone and concrete debris of varying sizes and no filter fabric, which is unsuitable for the long-term retention of the upland fill. This deficiency has caused localized undermining of the existing upland concrete and paved slabs adjacent to and south of the existing pier at Green Street. The shoreline will be revitalized through removal of 3,494 cubic yards of concrete debris and stones from the river. Also, the applicant has stated that the existing pier at Green Streeet extends approximately 500 feet into the East River, and is approximately 70 feet wide. The new pier will extend approximately 495 feet into the East River and will be 45 feet wide, and will be higher in most locations than the existing pier.

The stated purpose of this project is to provide public access in the form of an esplanade. The pier at Green Street will be rebuilt as an extension of the proposed esplanade and allow the public to have greater access to the East River.

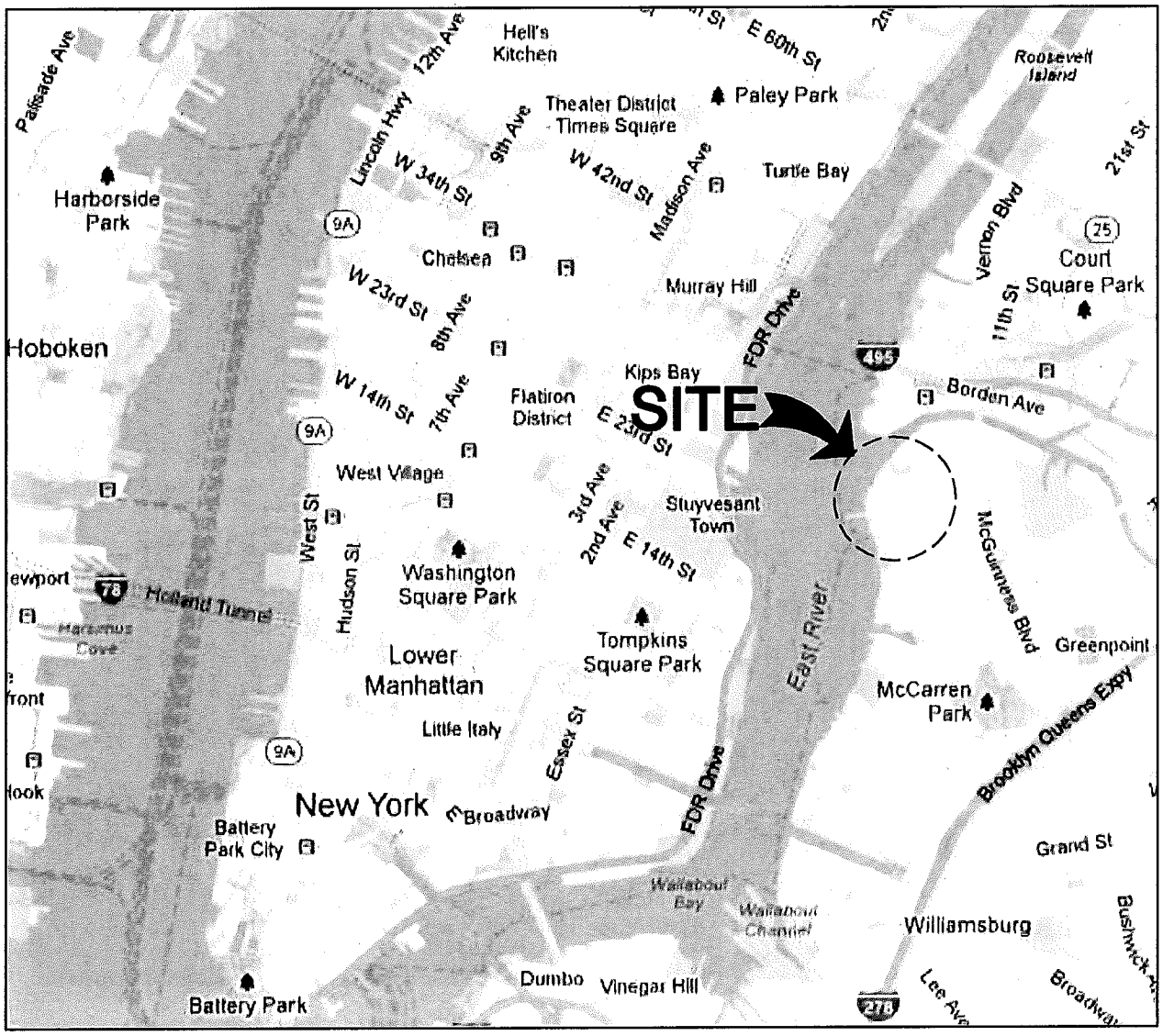

LOCATION MAP

N.T.S.

NAN-2013-01324-ETA

PURPOSE: SHORELINE STABILIZATION DATUM: BHD ADJACENT OWNERS: 1. SEE APPENDIX A1 2. ___ 3. ___	GREENPOINT LANDING SHORELINE STABILIZATION APPLICANT: GREENPOINT LANDING DEVELOPERS L.L.C. 535 MADISON AVENUE NEW YORK, NY 10022 AGENT: M.G. McLAREN, P.C. 100 SNAKE HILL ROAD WEST NYACK, N.Y. 10994	LOCATION MAP IN: BROOKLYN, NY AT: GREENPOINT COUNTY OF: KINGS STATE: NY SHT 1 OF 3 07/17/13

FILE NAME: Q:\Cadd105\105380.02\PERMITTING\Location Plan permit.dwg PLOT TIME: Fri, 23 Aug 2013 – 3:24pm LAST SAVE: Fri, 09 Aug 2013 – 3:01pm BY: rmccombs

NAN-2013-01324-ETA

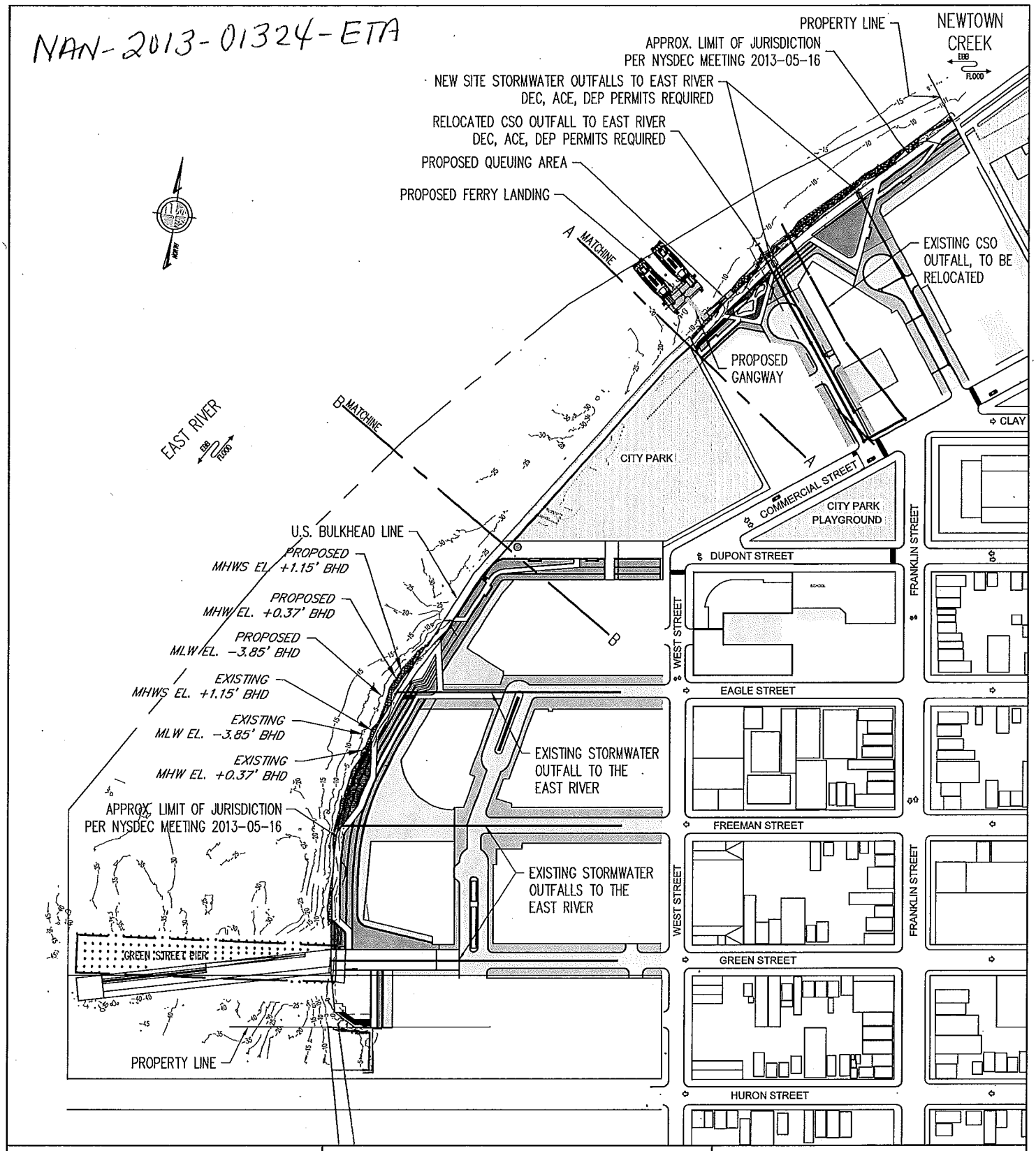

PURPOSE: SHORELINE STABILIZATION DATUM: BHD ADJACENT OWNERS: 1. SEE APPENDIX A1 2. ___ 3. ___	GREENPOINT LANDING SHORELINE STABILIZATION APPLICANT: GREENPOINT LANDING DEVELOPERS L.L.C. 535 MADISON AVENUE NEW YORK, NY 10022 AGENT: M.G. McLAREN, P.C. 100 SNAKE HILL ROAD WEST NYACK, N.Y. 10994	PROPOSED PLAN IN: BROOKLYN, NY AT: GREENPOINT COUNTY OF: KINGS STATE: NY 250' 0 250 SCALE: 1" = 250' SHT 1 OF 12 07/17/13

FILE NAME: Q:\Codd105\105380.02\PERMITTING\PROPOSED PLAN.dwg PLOT TIME: Fri, 23 Aug 2013 - 3:35pm LAST SAVE: Thu, 22 Aug 2013 - 2:40pm BY: rmccombs

NAN-2013-01324-ETA

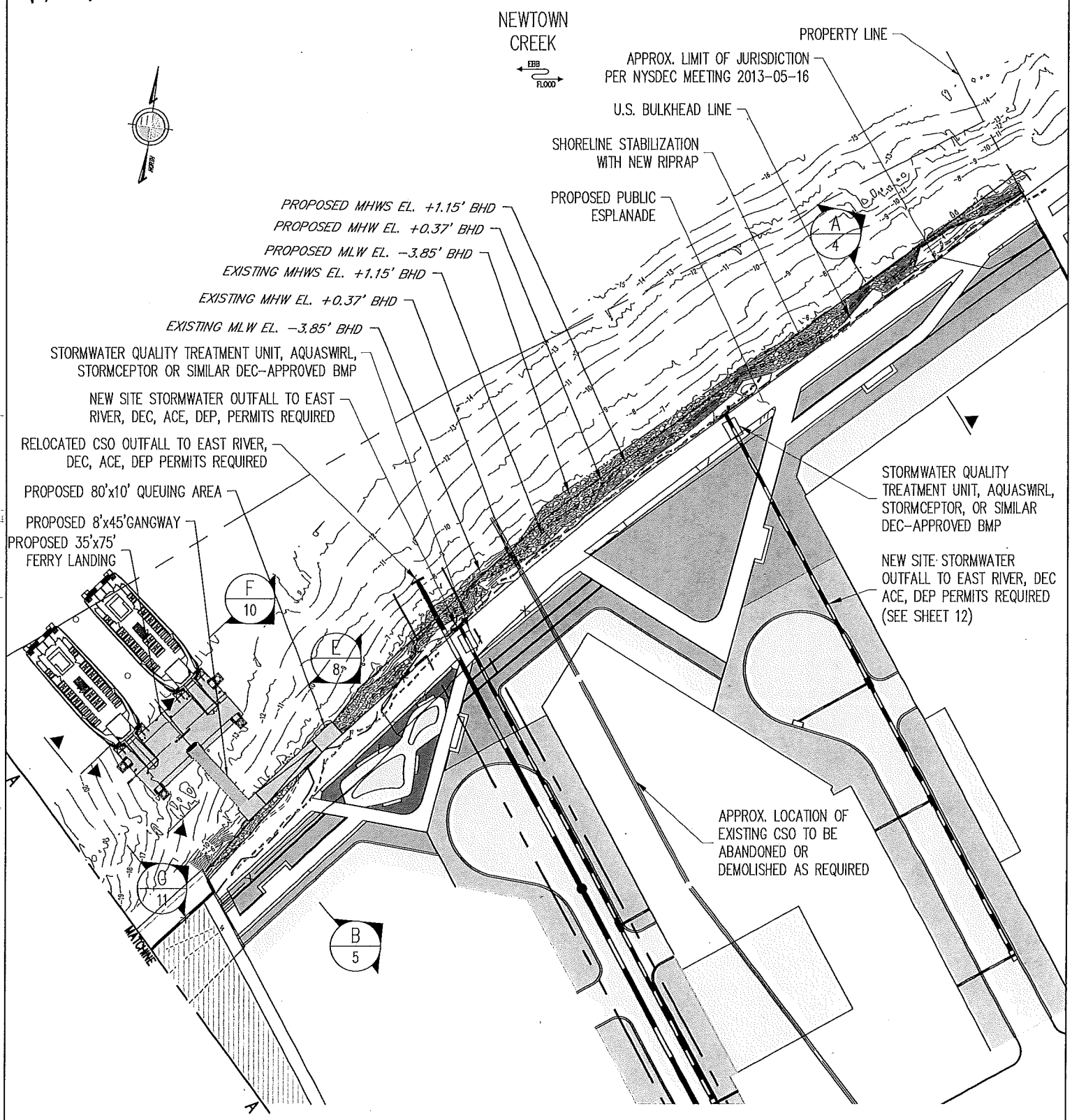

PURPOSE: SHORELINE STABILIZATION

DATUM: BHD

ADJACENT OWNERS:
1. SEE APPENDIX A1
2. ___
3. ___

GREENPOINT LANDING
SHORELINE STABILIZATION

APPLICANT:
GREENPOINT LANDING DEVELOPERS L.L.C.
535 MADISON AVENUE
NEW YORK, NY 10022

AGENT: M.G. McLAREN, P.C.
100 SNAKE HILL ROAD
WEST NYACK, N.Y. 10994

PART PLAN A-A

IN: BROOKLYN, NY
AT: GREENPOINT
COUNTY OF: KINGS STATE: NY

60' 30' 0 60'
SCALE: 1" = 60'

SHT 2 OF 12 07/17/13

FILE NAME: Q:\Cadd105\105380.02\permitting\PROPOSED PLAN.dwg PLOT TIME: Thu, 29 Aug 2013 - 1:54pm LAST SAVE: Mon, 26 Aug 2013 - 3:43pm BY: bperez

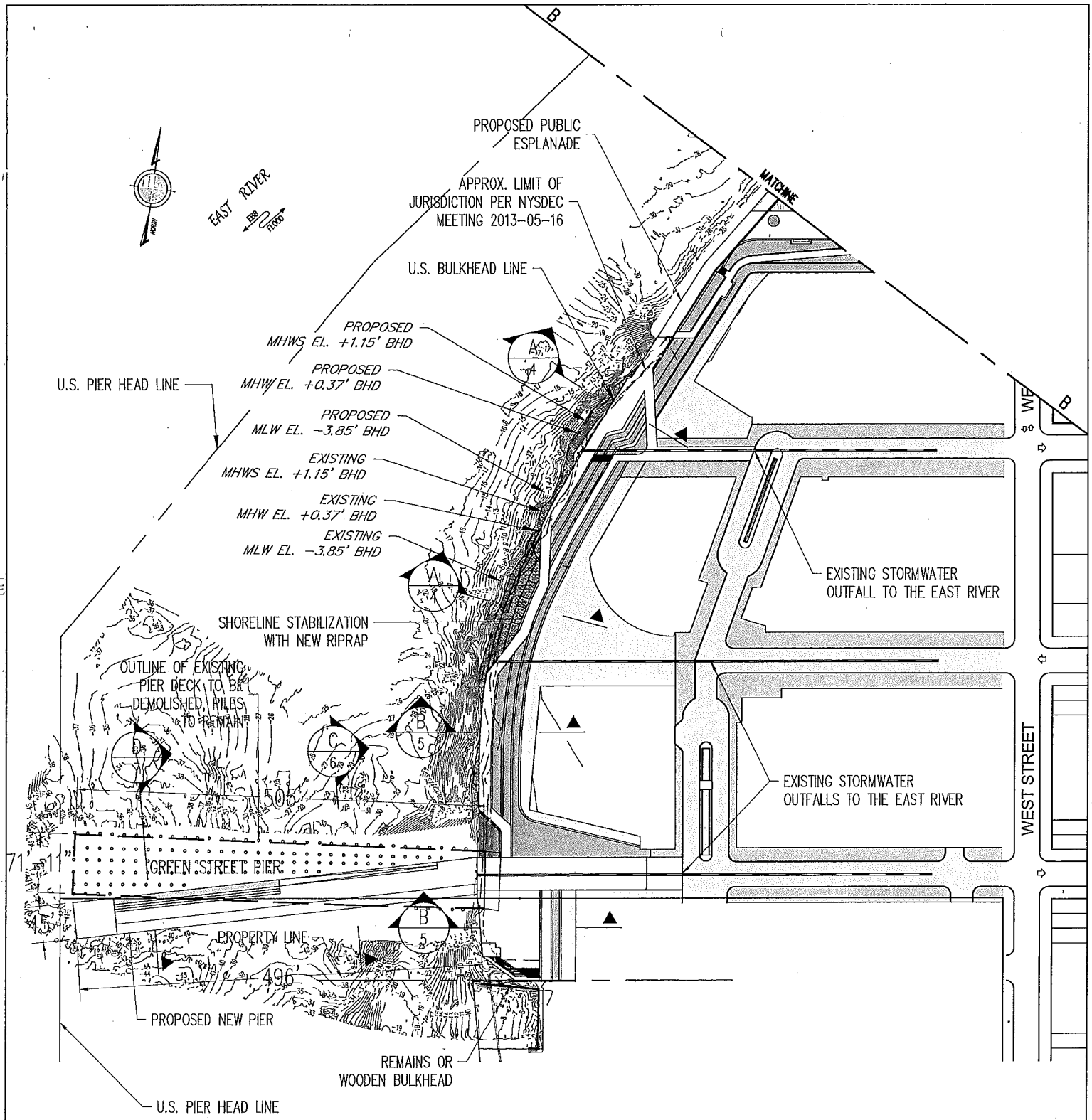

NAN-2013-01324-ETA

PURPOSE: SHORELINE STABILIZATION DATUM: BHD ADJACENT OWNERS: 1. SEE APPENDIX A1 2. ___ 3. ___	GREENPOINT LANDING SHORELINE STABILIZATION APPLICANT: GREENPOINT LANDING DEVELOPERS L.L.C. 535 MADISON AVENUE NEW YORK, NY 10022 AGENT: M.G. McLAREN, P.C. 100 SNAKE HILL ROAD WEST NYACK, N.Y. 10994	PART PLAN B-B IN: BROOKLYN, NY AT: GREENPOINT COUNTY OF: KINGS STATE: NY 60' 30' 0 60' SCALE: 1" = 60' SHT 3 OF 12 07/17/13

FILE NAME: Q:\Cadd105\105380.02\permitting\PROPOSED PLAN.dwg PLOT TIME: Thu, 29 Aug 2013 - 1:54pm LAST SAVE: Mon, 26 Aug 2013 - 3:43pm BY: bperez

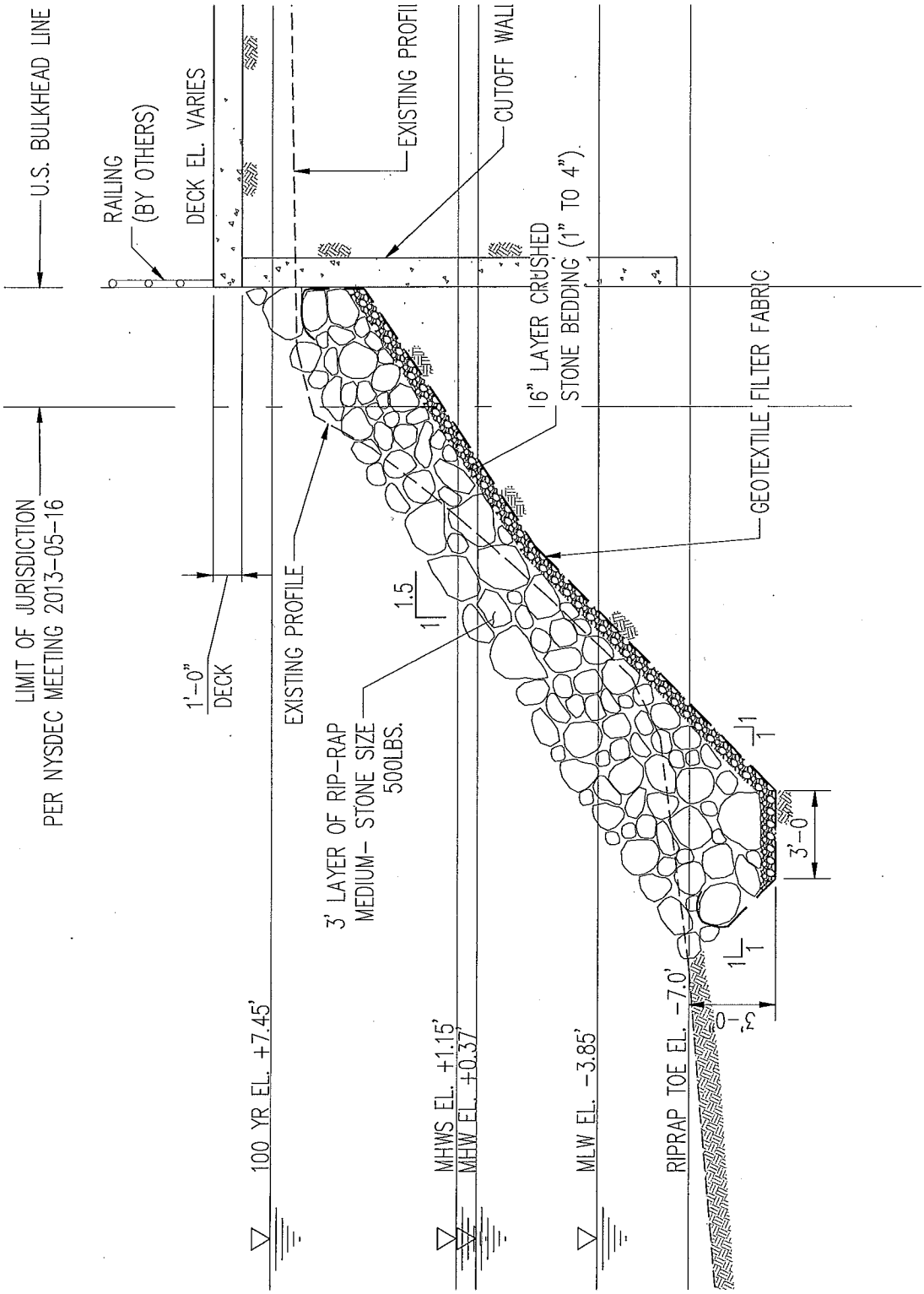

A 4

TYPICAL SECTION -1

NAN-2013-01324-ETA

PURPOSE: SHORELINE STABILIZATION

DATUM: BHD

ADJACENT OWNERS:
1. SEE APPENDIX A1
2. ___
3. ___

GREENPOINT LANDING
SHORELINE STABILIZATION

APPLICANT:
GREENPOINT LANDING DEVELOPERS L.L.C.
535 MADISON AVENUE
NEW YORK, NY 10022

AGENT: M.G. McLAREN, P.C.
100 SNAKE HILL ROAD
WEST NYACK, N.Y. 10994

TYPICAL SECTION -1

IN: BROOKLYN, NY
AT: GREENPOINT
COUNTY OF: KINGS STATE: NY

4' 0 4' 8'

SCALE: 3/16" = 1'-0"
SHT 4 OF 12 07/17/13

FILE NAME: Q:\Cadd105\105380.02\PERMITTING\Section 2-13 permit.dwg PLOT TIME: Fri, 23 Aug 2013 - 3:24pm LAST SAVE: Fri, 12 Jul 2013 - 11:23am BY: rmccombs

NAN-2013-01324-ETA

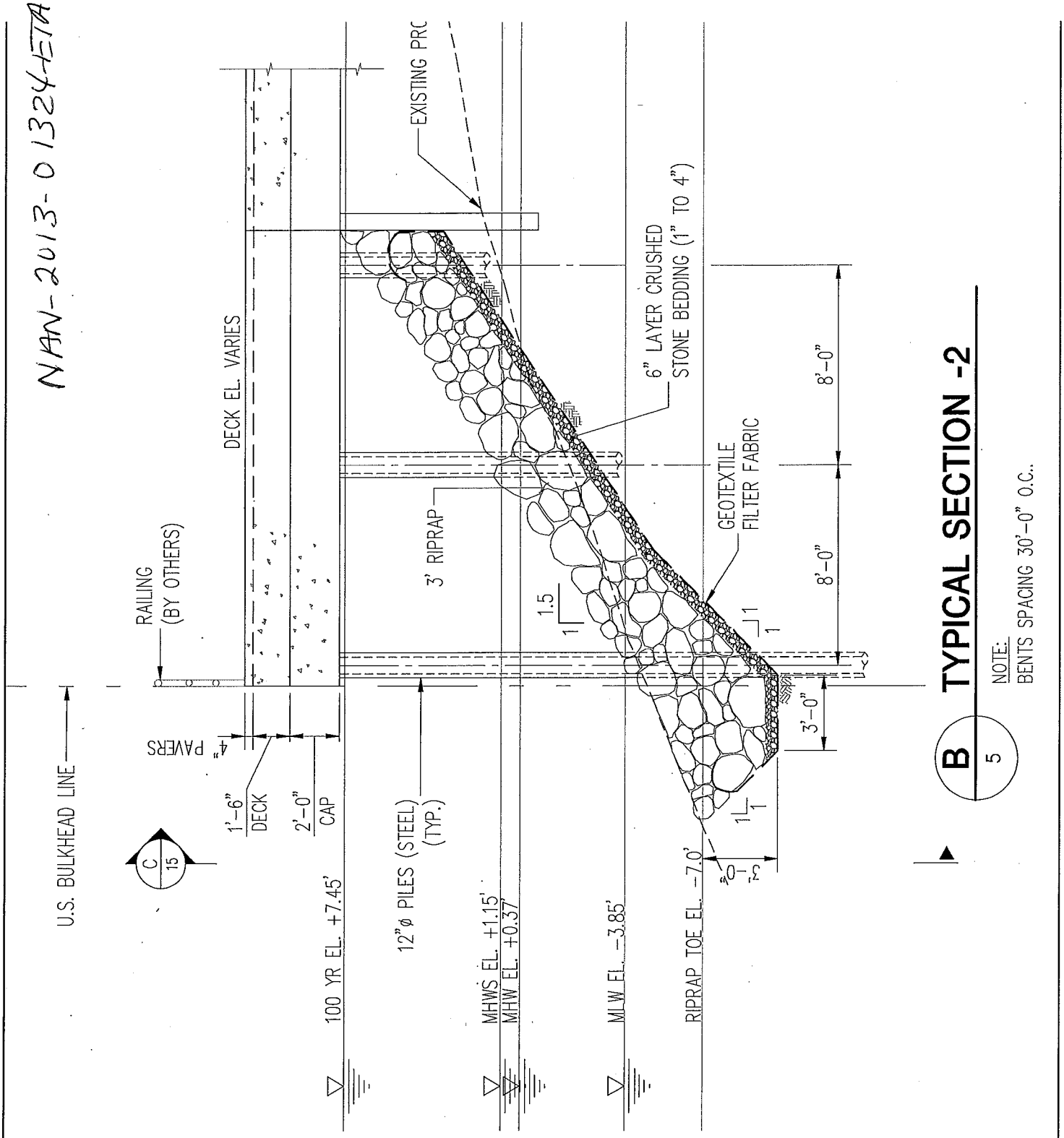

PURPOSE: SHORELINE STABILIZATION DATUM: BHD ADJACENT OWNERS: 1. SEE APPENDIX A1 2. ___ 3. ___	GREENPOINT LANDING SHORELINE STABILIZATION APPLICANT: GREENPOINT LANDING DEVELOPERS L.L.C. 535 MADISON AVENUE NEW YORK, NY 10022 AGENT: M.G. McLAREN, P.C. 100 SNAKE HILL ROAD WEST NYACK, N.Y. 10994	TYPICAL SECTION -2 IN: BROOKLYN, NY AT: GREENPOINT COUNTY OF: KINGS STATE: NY 4' 0 4' 8' SCALE: 3/16" = 1'-0" SHT 5 OF 12 07/17/13

FILE NAME: Q:\Cadd105\105380.02\PERMITTING\Section 14 permit.dwg PLOT TIME: Fri, 23 Aug 2013 - 3:25pm LAST SAVE: Thu, 27 Jun 2013 - 5:08pm BY: rmccombs

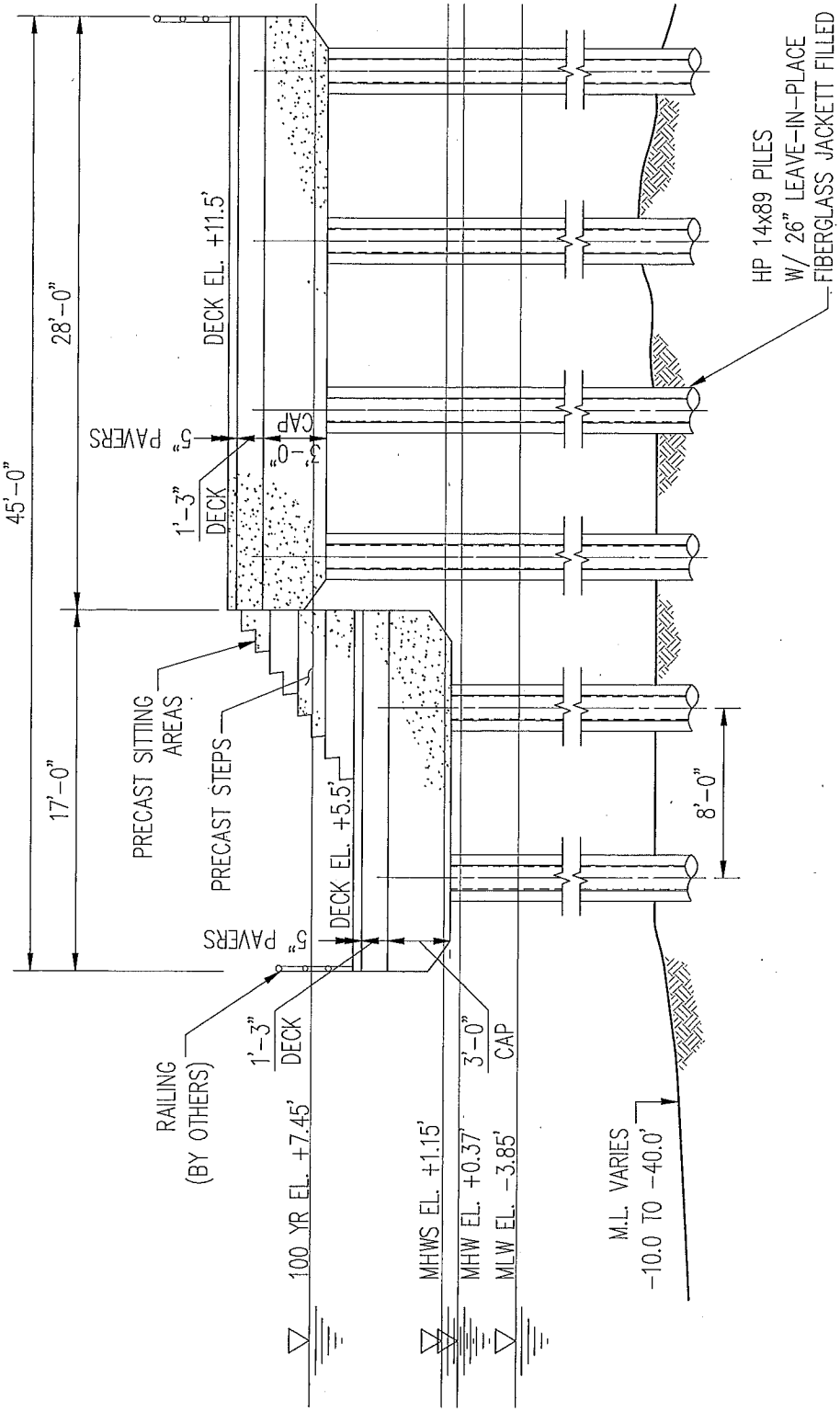

C 6 **TYPICAL PIER SECTION**

NAN-2013-01324-ETA

PURPOSE: SHORELINE STABILIZATION DATUM: BHD ADJACENT OWNERS: 1. SEE APPENDIX A1 2. ___ 3. ___	GREENPOINT LANDING SHORELINE STABILIZATION APPLICANT: GREENPOINT LANDING DEVELOPERS L.L.C. 535 MADISON AVENUE NEW YORK, NY 10022 AGENT: M.G. McLAREN, P.C. 100 SNAKE HILL ROAD WEST NYACK, N.Y. 10994	PIER SECTION – 1 IN: BROOKLYN, NY AT: GREENPOINT COUNTY OF: KINGS STATE: NY 8' 4' 0 8' SCALE: 1/8" = 1'-0" SHT 6 OF 12 07/17/13

FILE NAME: Q:\Codd105\105380.02\PERMITTING\pier section permit.dwg PLOT TIME: Fri, 23 Aug 2013 – 3:25pm LAST SAVE: Tue, 13 Aug 2013 – 10:32am BY: rmccombs

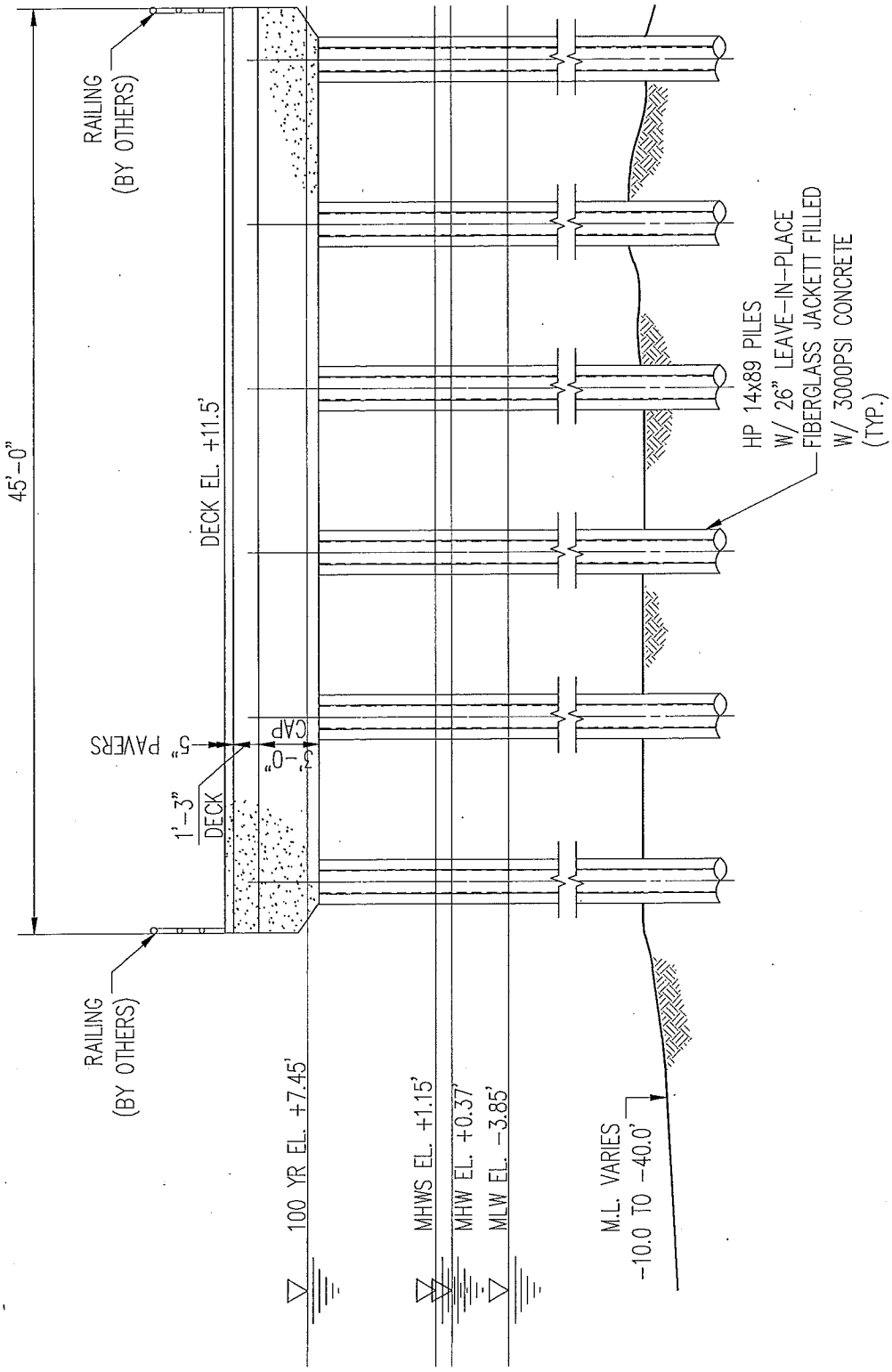

D 7 **TYPICAL PIER SECTION**

NAN-2013-01324-ETA

PURPOSE: SHORELINE STABILIZATION DATUM: BHD ADJACENT OWNERS: 1. SEE APPENDIX A1 2. ___ 3. ___	GREENPOINT LANDING SHORELINE STABILIZATION APPLICANT: GREENPOINT LANDING DEVELOPERS L.L.C. 535 MADISON AVENUE NEW YORK, NY 10022 AGENT: M.G. McLAREN, P.C. 100 SNAKE HILL ROAD WEST NYACK, N.Y. 10994	PIER SECTION - 2 IN: BROOKLYN, NY AT: GREENPOINT COUNTY OF: KINGS STATE: NY 8' 4' 0 8' SCALE: 1/8" = 1'-0" SHT 7 OF 12 07/17/13

FILE NAME: Q:\Cadd105\105380.02\PERMITTING\pier section permit.dwg PLOT TIME: Fri, 23 Aug 2013 - 3:25pm LAST SAVE: Tue, 13 Aug 2013 - 10:32am BY: rmccombs

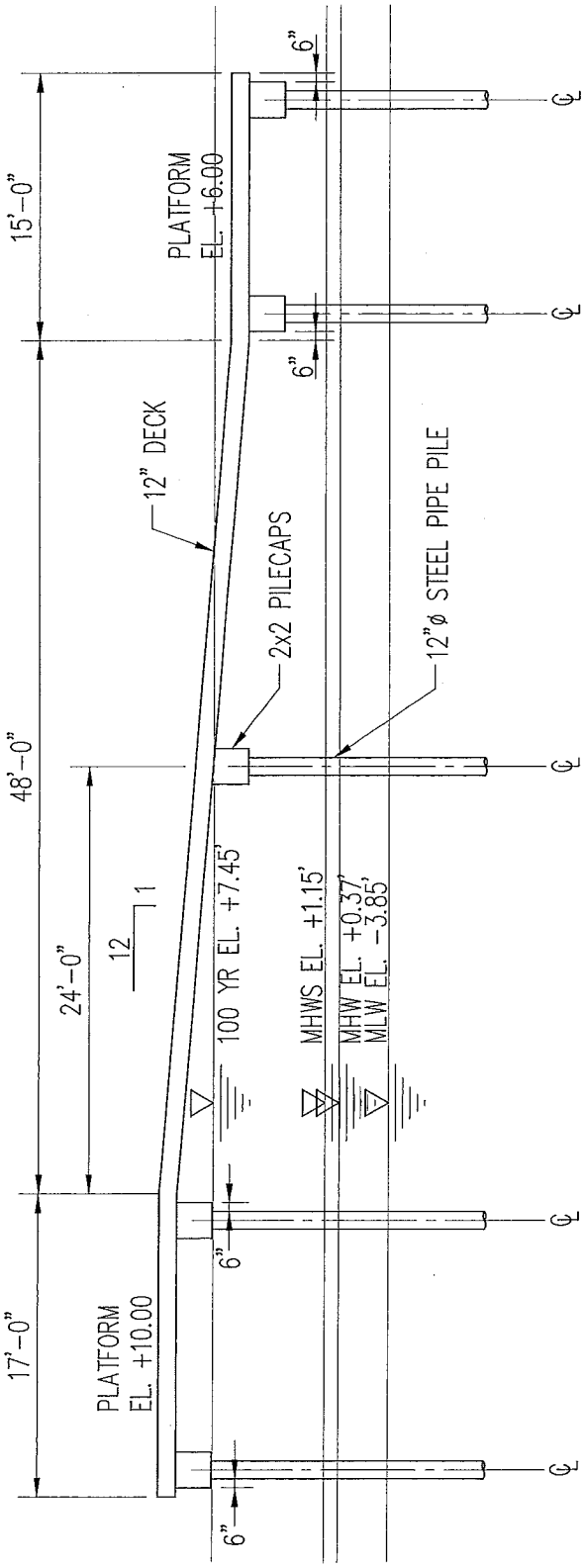

NAN-2013-01324-ETA

FERRY LANDING ACCESS PLATFORM DETAIL

E 8

PURPOSE: SHORELINE STABILIZATION

DATUM: BHD

ADJACENT OWNERS:
1. SEE APPENDIX A1
2. ___
3. ___

GREENPOINT LANDING
SHORELINE STABILIZATION

APPLICANT:
GREENPOINT LANDING DEVELOPERS L.L.C.
535 MADISON AVENUE
NEW YORK, NY 10022

AGENT: M.G. McLAREN, P.C.
100 SNAKE HILL ROAD
WEST NYACK, N.Y. 10994

FERRY LANDING
ACCESS PLATFORM DETAIL

IN: BROOKLYN, NY
AT: GREENPOINT
COUNTY OF: KINGS STATE: NY

8' 0' 8' 16'

SCALE: 3/32" = 1'-0"
SHT 8 OF 12 07/17/13

FILE NAME: Q:\Cadd105\105380.02\permitting\pier section permit.dwg PLOT TIME: Thu, 29 Aug 2013 - 1:55pm LAST SAVE: Tue, 13 Aug 2013 - 10:32am BY: bperez

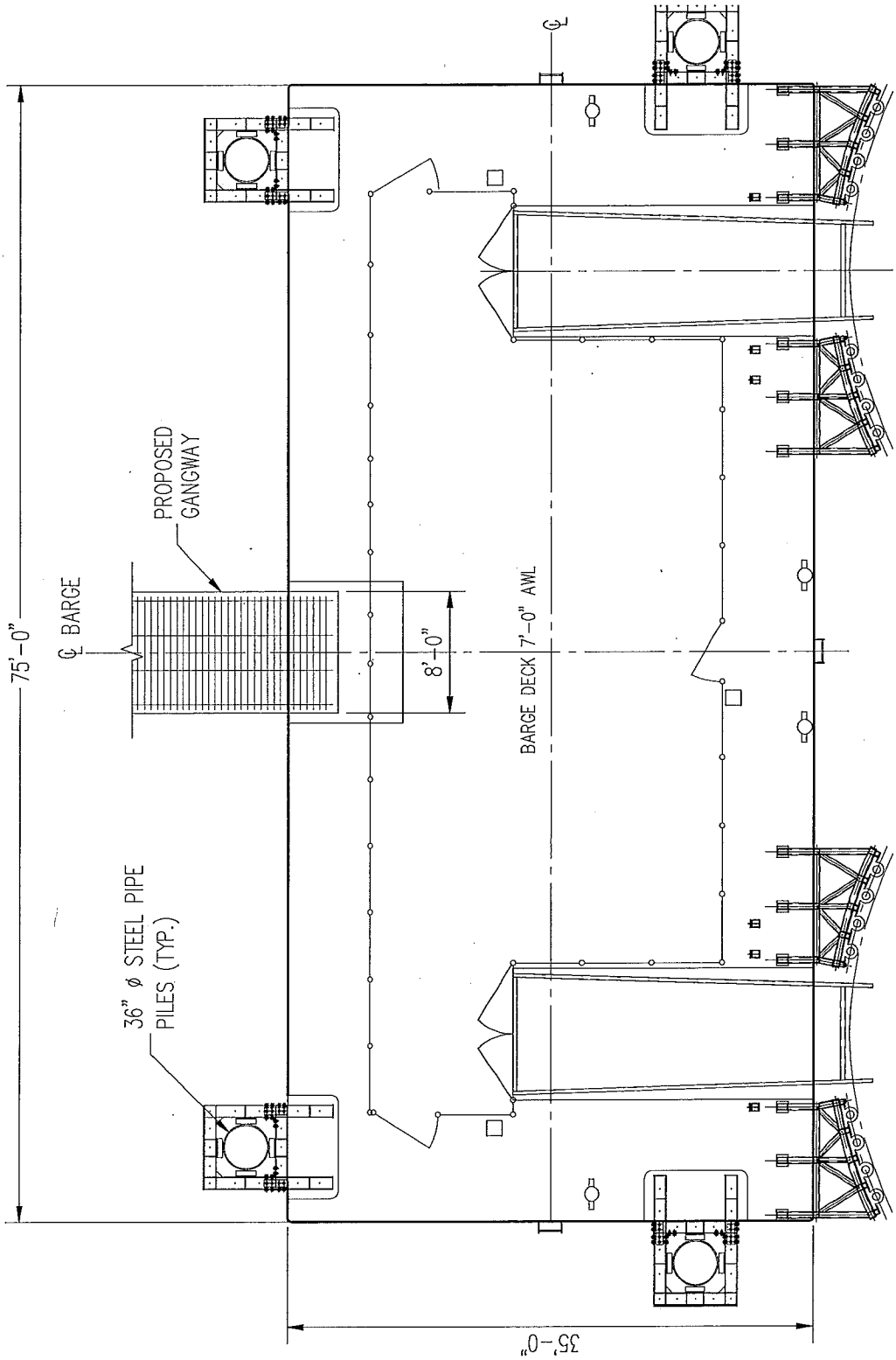

FERRY LANDING BARGE PLAN

NAN-2013-01324-ETA

PURPOSE: SHORELINE STABILIZATION

DATUM: BHD

ADJACENT OWNERS:
1. SEE APPENDIX A1
2. ___
3. ___

GREENPOINT LANDING
SHORELINE STABILIZATION

APPLICANT:
GREENPOINT LANDING DEVELOPERS L.L.C.
535 MADISON AVENUE
NEW YORK, NY 10022

AGENT: M.G. McLAREN, P.C.
100 SNAKE HILL ROAD
WEST NYACK, N.Y. 10994

FERRY LANDING
BARGE PLAN

IN: BROOKLYN, NY
AT: GREENPOINT
COUNTY OF: KINGS STATE: NY

8' 0 8' 16'

SCALE: 3/32" = 1'-0"
SHT 9 OF 12 07/17/13

FILE NAME: Q:\Cadd105\105380.02\PERMITTING\pier section permit.dwg PLOT TIME: Fri, 23 Aug 2013 - 3:25pm LAST SAVE: Tue, 13 Aug 2013 - 10:32am BY: rmccombs

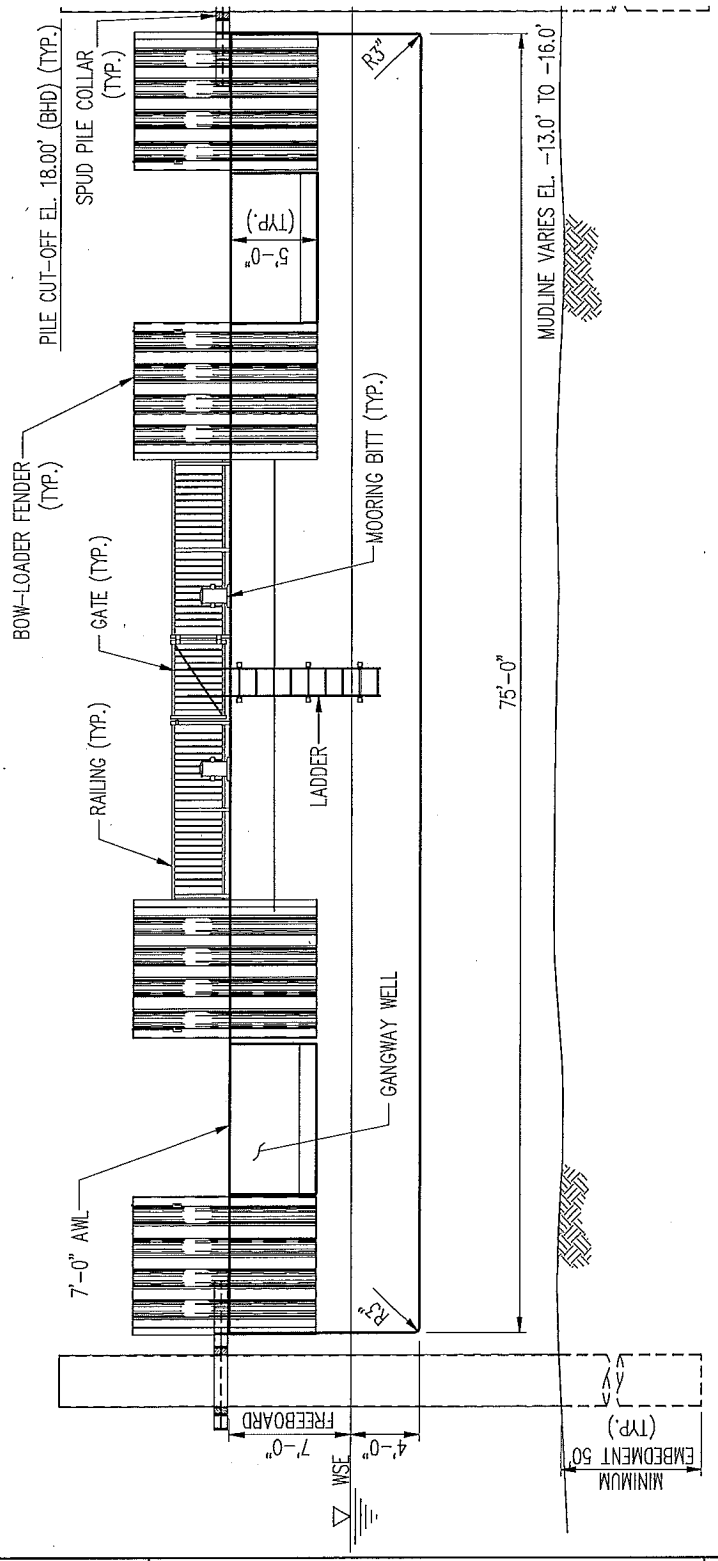

NAN-2013-01324-E7A

FERRY LANDING BARGE ELEVATION

F 10

PURPOSE: SHORELINE STABILIZATION DATUM: BHD ADJACENT OWNERS: 1. SEE APPENDIX A1 2. ___ 3. ___	GREENPOINT LANDING SHORELINE STABILIZATION APPLICANT: GREENPOINT LANDING DEVELOPERS L.L.C. 535 MADISON AVENUE NEW YORK, NY 10022 AGENT: M.G. McLAREN, P.C. 100 SNAKE HILL ROAD WEST NYACK, N.Y. 10994	FERRY LANDING BARGE ELEVATION - 1 IN: BROOKLYN, NY AT: GREENPOINT COUNTY OF: KINGS STATE: NY 8' 0 8' 16' SCALE: 3/32" = 1'-0" SHT 10 OF 12 07/17/13

FILE NAME: Q:\Cadd105\105380.02\PERMITTING\pier section permit.dwg PLOT TIME: Fri, 23 Aug 2013 - 3:25pm LAST SAVE: Tue, 13 Aug 2013 - 10:32am BY: rmccombs

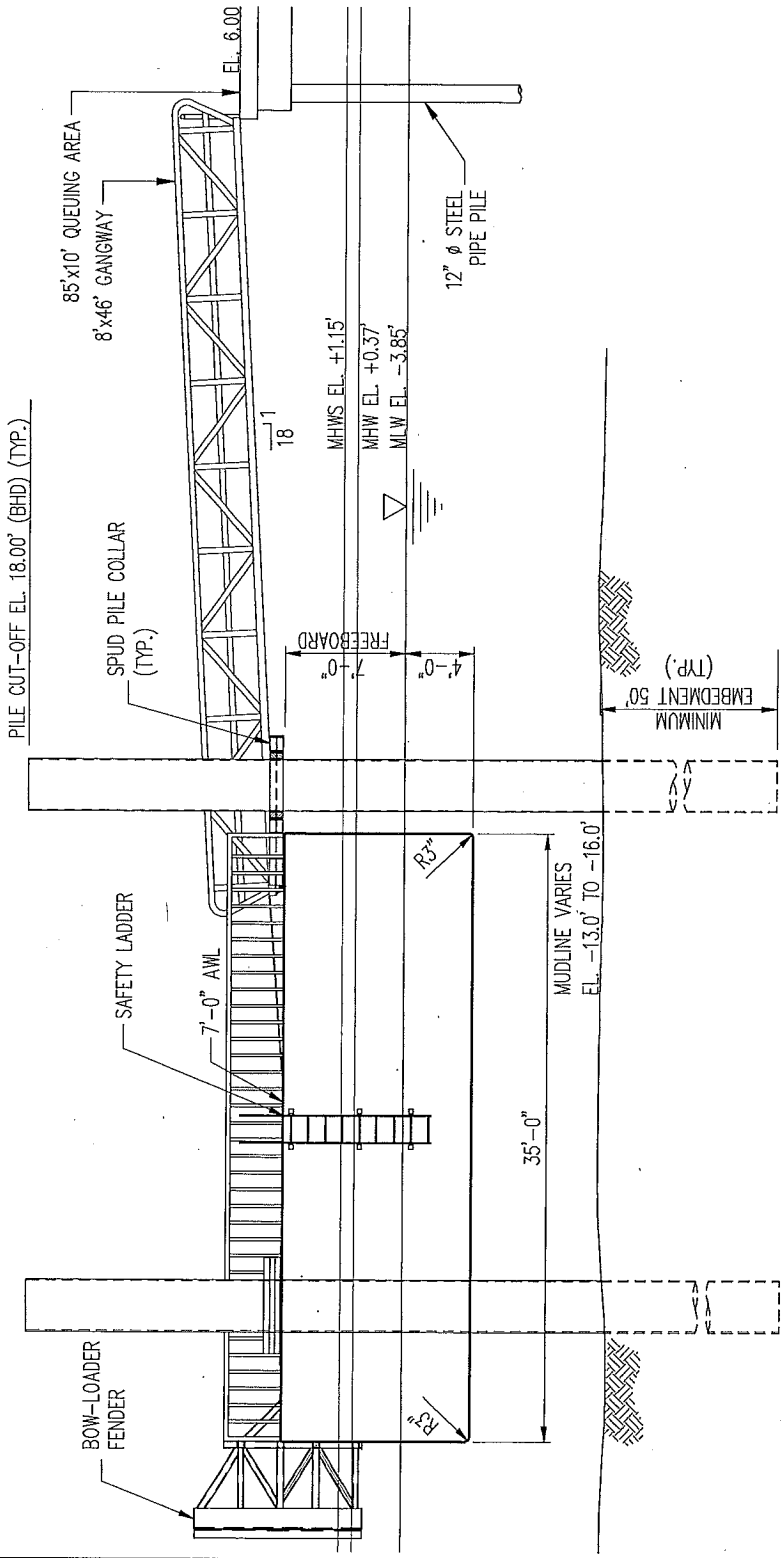

FERRY LANDING BARGE ELEVATION

G 11

NAN-2013-01324-ETA

PURPOSE: SHORELINE STABILIZATION

DATUM: BHD

ADJACENT OWNERS:
1. SEE APPENDIX A1
2. ___
3. ___

GREENPOINT LANDING
SHORELINE STABILIZATION

APPLICANT:
GREENPOINT LANDING DEVELOPERS L.L.C.
535 MADISON AVENUE
NEW YORK, NY 10022

AGENT: M.G. McLAREN, P.C.
100 SNAKE HILL ROAD
WEST NYACK, N.Y. 10994

FERRY LANDING
BARGE ELEVATION - 2

IN: BROOKLYN, NY
AT: GREENPOINT
COUNTY OF: KINGS STATE: NY

8' 0 8' 16'

SCALE: 3/32" = 1'-0"
SHT 11 OF 12 07/17/13

FILE NAME: Q:\Cadd105\105380.02\PERMITTING\pier section permit.dwg PLOT TIME: Fri, 23 Aug 2013 - 3:25pm LAST SAVE: Tue, 13 Aug 2013 - 10:32am BY: rmccombs

NAN-2013-01324-ETA

STORMDRAIN OUTFALL DETAIL (TYP.)

N.T.S.

NOTE:
OCCURS IN 6 LOCATIONS.

PURPOSE: SHORELINE STABILIZATION DATUM: BHD ADJACENT OWNERS: 1. SEE APPENDIX A1 2. ___ 3. ___	GREENPOINT LANDING SHORELINE STABILIZATION APPLICANT: GREENPOINT LANDING DEVELOPERS L.L.C. 535 MADISON AVENUE NEW YORK, NY 10022 AGENT: M.G. McLAREN, P.C. 100 SNAKE HILL ROAD WEST NYACK, N.Y. 10994	STORMWATER OUTFALL DETAIL IN: BROOKLYN, NY AT: GREENPOINT COUNTY OF: KINGS STATE: NY SHT 12 OF 12 07/17/13

FILE NAME: Q:\Codd105\105380.02\PERMITTING\pier section permit.dwg PLOT TIME: Fri, 23 Aug 2013 – 3:25pm LAST SAVE: Tue, 13 Aug 2013 – 10:32am BY: rmccombs