PUBLIC NOTICE

US Army Corps
of Engineers
New York District
Jacob K. Javits Federal Building
New York, N.Y. 10278-0090
ATTN: Regulatory Branch

In replying refer to:
Public Notice Number: NAN-2015-01310-EPI
Issue Date: 20 November 2015
Expiration Date: 20 December 2015

To Whom It May Concern:

The New York District, Corps of Engineers has received an application for a Department of the Army permit pursuant to Section 10 of the Rivers and Harbors Act of 1899 (33 U.S.C. 403),

APPLICANT: Buchanan Marine, LP
Contact: W. Hugh McCrory, Jr.
508A East Indian River Rd.
Norfolk, VA 23523

ACTIVITY: Placement of two buoy/anchor systems for temporary mooring of hopper barges

WATERWAY: Flushing Bay at the East River

LOCATION: Near Rikers Island, Queens County, New York.

A detailed description and plans of the applicant's activity are enclosed to assist in your review.

The decision whether to issue a permit will be based on an evaluation of the probable impact including cumulative impacts of the proposed activity on the public interest. That decision will reflect the national concern for both protection and utilization of important resources. The benefit which reasonably may be expected to accrue from the proposal must be balanced against its reasonably foreseeable detriments. All factors which may be relevant to the proposal will be considered including the cumulative effects thereof; among those are conservation, economics, aesthetics, general environmental concerns, wetlands, historic properties, fish and wildlife values, flood hazards, floodplain values, land use, navigation, shoreline erosion and accretion, recreation, water supply and conservation, water quality, energy needs, safety, food and fiber production, mineral needs, considerations of property ownership and, in general, the needs and welfare of the people.

The Corps of Engineers is soliciting comments from the public; Federal, state, and local agencies and officials; Indian Tribes; and other interested parties in order to consider and evaluate the impacts of this proposed activity. Any comments received will be considered by the Corps of Engineers to determine whether to issue, modify, condition or deny a permit for this proposal. To make this decision, comments are used to assess impacts on endangered species, historic properties, water quality, general environmental effects, and the other public interest factors listed above. Comments are used in preparation of an Environmental Assessment and/or an Environmental Impact Statement pursuant to the National Environmental Policy Act. Comments are also used to determine the need for a public hearing and to determine the overall public interest of the proposed activity.

ALL COMMENTS REGARDING THE PERMIT APPLICATION MUST BE PREPARED IN WRITING AND MAILED TO REACH THIS OFFICE BEFORE THE EXPIRATION DATE OF THIS NOTICE, otherwise, it will be presumed that there are no objections to the activity. Comments submitted in response to this notice will be fully considered during the public interest review for this permit application. All written comments, including names and addresses, will be made a part of the administrative record, available to the public under the Freedom of Information Act. The

Administrative Record, or portions thereof, may also be posted on a Corps of Engineers internet web site. Due to resource limitations, this office will normally not acknowledge the receipt of comments or respond to individual letters of comment.

Any person may request, in writing, before this public notice expires, that a public hearing be held to collect information necessary to consider this application. Requests for public hearings shall state, with particularity, the reasons why a public hearing should be held. It should be noted that information submitted by mail is considered just as carefully in the permit decision process and bears the same weight as that furnished at a public hearing.

Our preliminary determination is that the activity for which authorization is sought herein is not likely to affect any Federally endangered or threatened species or their critical habitat. However, pursuant to Section 7 of the Endangered Species Act (16 U.S.C. 1531), the District Engineer is consulting with the appropriate Federal agency to determine the presence of and potential impacts to listed species in the project area or their critical habitat.

The Magnuson-Stevens Fishery Conservation and Management Act, as amended by the Sustainable Fisheries Act (Public Law 104-267), requires all Federal agencies to consult with the National Oceanic and Atmospheric Administration Fisheries Service (NOAA/FS) on all actions, or proposed actions, permitted, funded, or undertaken by the agency, that may adversely affect Essential Fish Habitat (EFH). The proposed work, fully described in the attached work description, could cause the disruption of habitat for various life stages of some EFH-designated species as a result of a temporary increase in turbidity during construction. However, the New York District has made the preliminary determination that the site-specific adverse effects are not likely to be substantial because it is expected that fish populations would avoid the small area of disturbance. Further consultation with NOAA/FS regarding EFH impacts and conservation recommendations being conducted and will be concluded prior to the final decision.

Based upon a review of the latest published version of the National Register of Historic Places, there are no known sites eligible for, or included in, the Register within the permit area. Presently unknown archeological, scientific, pre-historical, or historical data may be lost by work accomplished under the required permit.

Pursuant to Section 307 (c) of the Coastal Zone Management Act of 1972 as amended [16 U.S.C. 1456 (c)], for activities under consideration that are located within the coastal zone of a state which has a federally approved coastal zone management program, the applicant has certified in the permit application that the activity complies with, and will be conducted in a manner that is consistent with, the approved state coastal zone management program. By this public notice, we are requesting the state's concurrence with, objection to, or waiver of the applicant's certification. No permit decision will be made until one of these actions occurs. For activities within the coastal zone of New York State, the applicant's certification and accompanying information is available from the Consistency Coordinator, New York State Department of State, Division of Coastal Resources and Waterfront Revitalization, Coastal Zone Management Program, One Commerce Plaza, 99 Washington Avenue, Albany, New York 12231, Telephone (518) 474-6000. Comments regarding the applicant's certification, and copies of any letters to this office commenting upon this proposal, should be so addressed.

In addition to any required water quality certificate and coastal zone management program concurrence, the applicant has obtained or requested the following governmental authorization for the activity under consideration:

- New York State Department of Environmental Conservation

It is requested that you communicate the foregoing information concerning the activity to any persons known by you to be interested and who did not receive a copy of this notice. If you have any questions concerning this application, you may contact this office at (917) 790-8533 and ask for Randy Piersol.

In order for us to better serve you, please complete our Customer Service Survey located at http://www.nan.usace.army.mil/Missions/Regulatory/CustomerSurvey.aspx.

For more information on New York District Corps of Engineers programs, visit our website at http://www.nan.usace.army.mil.

Naomi Handell
for Christopher S. Mallery, Ph.D.
Acting Chief, Regulatory Branch

Enclosures

WORK DESCRIPTION

The applicant, Buchanan Marine, LP, has requested Department of the Army authorization for placement of two ballast anchor structures to serve as temporary moorings for hopper barges located off the shoreline of Rikers Island at 40 47.679N 73 52.266W and 40 47.641N 73 52.059W in Flushing Bay, Queens County, New York.

The work would involve:

Installation of two buoy/anchor systems by a barge mounted crane. The moorings would serve up to four, 150-foot-long by 40-foot-wide and 12-feet-deep hopper barges used to facilitate aggregate deliveries to Flushing, New York. The moorings will be flat bar buoys with 30 foot floating poly pendants connected to two 19,000 pound anchors with 90 feet of 2.5 inch chain.

Additional Details:

The anchor chains will not sweep the bottom. The appropriate length of chain will be installed to keep the mooring in position at high tide. During low tide approximately six feet of the chain will lay on the bottom. The weight of the chain will keep it from moving. Over time the weight of the anchors will cause them to be buried in the mud/sand/silt bottom.

The applicant has stated that they have avoided, minimized, and mitigated for impacts proposed to the maximum extent practicable by designing the proposed project with the minimum necessary to allow for safe mooring of barges. There are alternatives to the project however all of them involve land transportation which increases costs, increases delivery time, and produces greater impacts to the environment.

The stated purpose of this project is to facilitate aggregate delivers to Flushing New York customers.

CENAN-OP-RW
MEMORANDUM FOR THE RECORD

SUBJECT: Preliminary Determination for Public Notice (Application Number NAN-2015-01310-EPI).

1. This District has received an application for a Department of the Army permit pursuant to Section 10 of the Rivers and Harbors Act of 1899 (33 U.S.C. 403), and Section 103 of the Marine Protection, Research & Sanctuaries Act of 1972, as amended (33 U.S.C. 1413).

APPLICANT: Buchanan Marine, LP
Contact: W. Hugh McCrory, Jr.
508A East Indian River Rd.
Norfolk, VA 23523

ACTIVITY: Placement of two buoy/anchor systems for temporary mooring of hopper barges

WATERWAY: Flushing Bay at the East River

LOCATION: Near Rikers Island, Queens County, New York.

2. Based upon a review of the properties listed or eligible for listing in the latest available version of the National Register Information System computer listing for National Register of Historic Places, the preliminary determination is that site there are no Historic Places within the permit area.

3. I have reviewed permit record map numbers and found that no permit number was previously issued for this immediate permit area.

4. Based upon a review of the latest available published version of the threatened and endangered species listing, a preliminary determination is that the activity under consideration will not affect those species listed or their critical habitat.

5. The activity is located adjacent to a federal or state navigation channel. The activity is located in a federal anchorage, special or otherwise.

6. The proposed project does lie within the coastal zone.

7. The preliminary 404 (b) (1) evaluation of compliance with the Clean Water Act is enclosed.

8. These preliminary determinations will be reconsidered as additional information is developed.

Randy Piersol Project Manager Eastern Section	Stephan A. Ryba Chief, Eastern Section

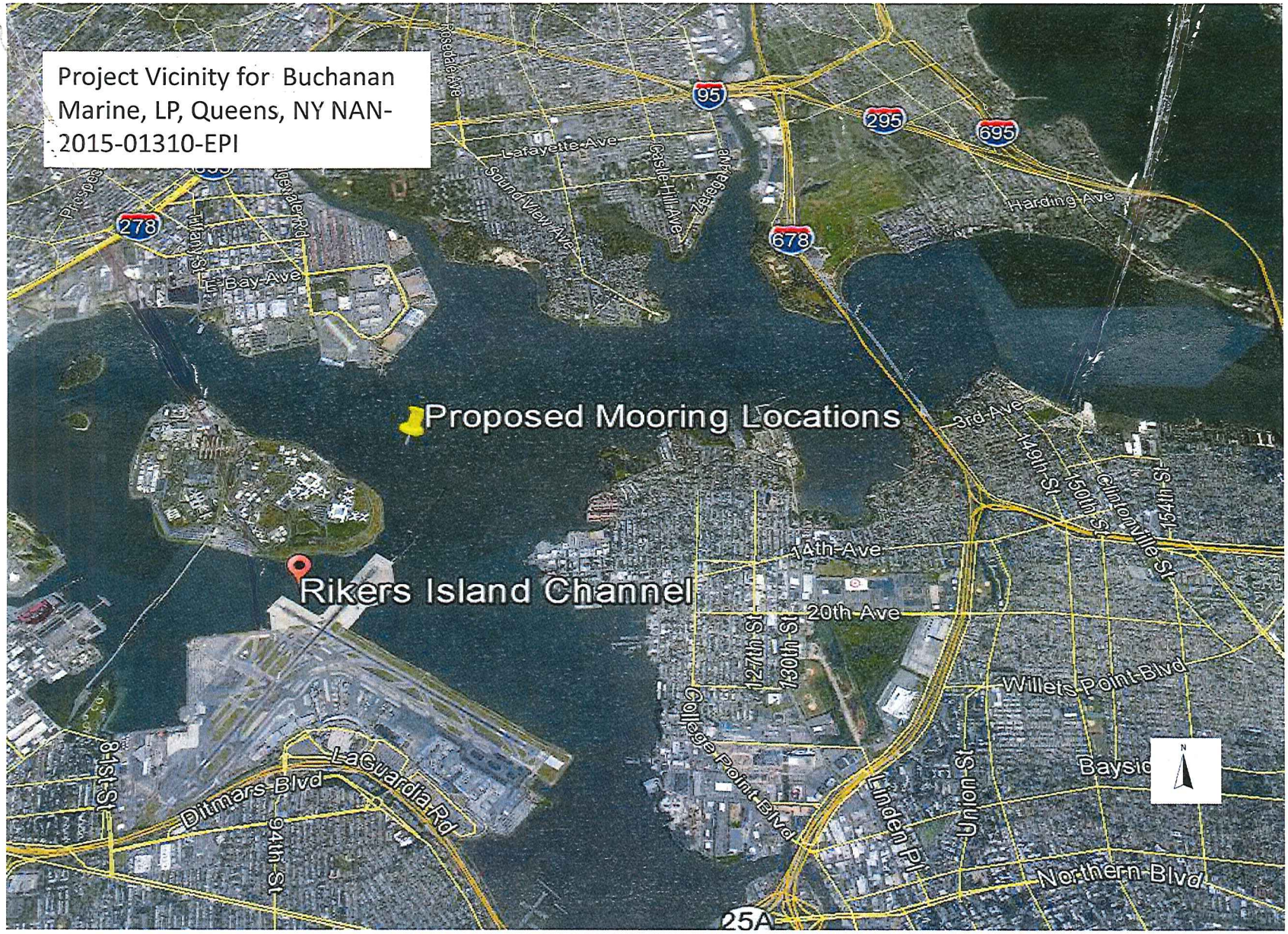
Project Vicinity for Buchanan Marine, LP, Queens, NY NAN-2015-01310-EPI
Proposed Mooring Locations
Rikers Island Channel
95
295
695
678
278
Lafayette Ave
Sound View Ave
Castle Hill Ave
Zerega Ave
Harding Ave
E Bay Ave
3rd Ave
149th St
150th St
Clintonville St
154th St
14th Ave
20th Ave
127th St
130th St
College Point Blvd
Willets Point Blvd
Linden Pl
Union St
Baysid
Northern Blvd
LaGuardia Rd
Ditmars Blvd
94th St
81st St
25A

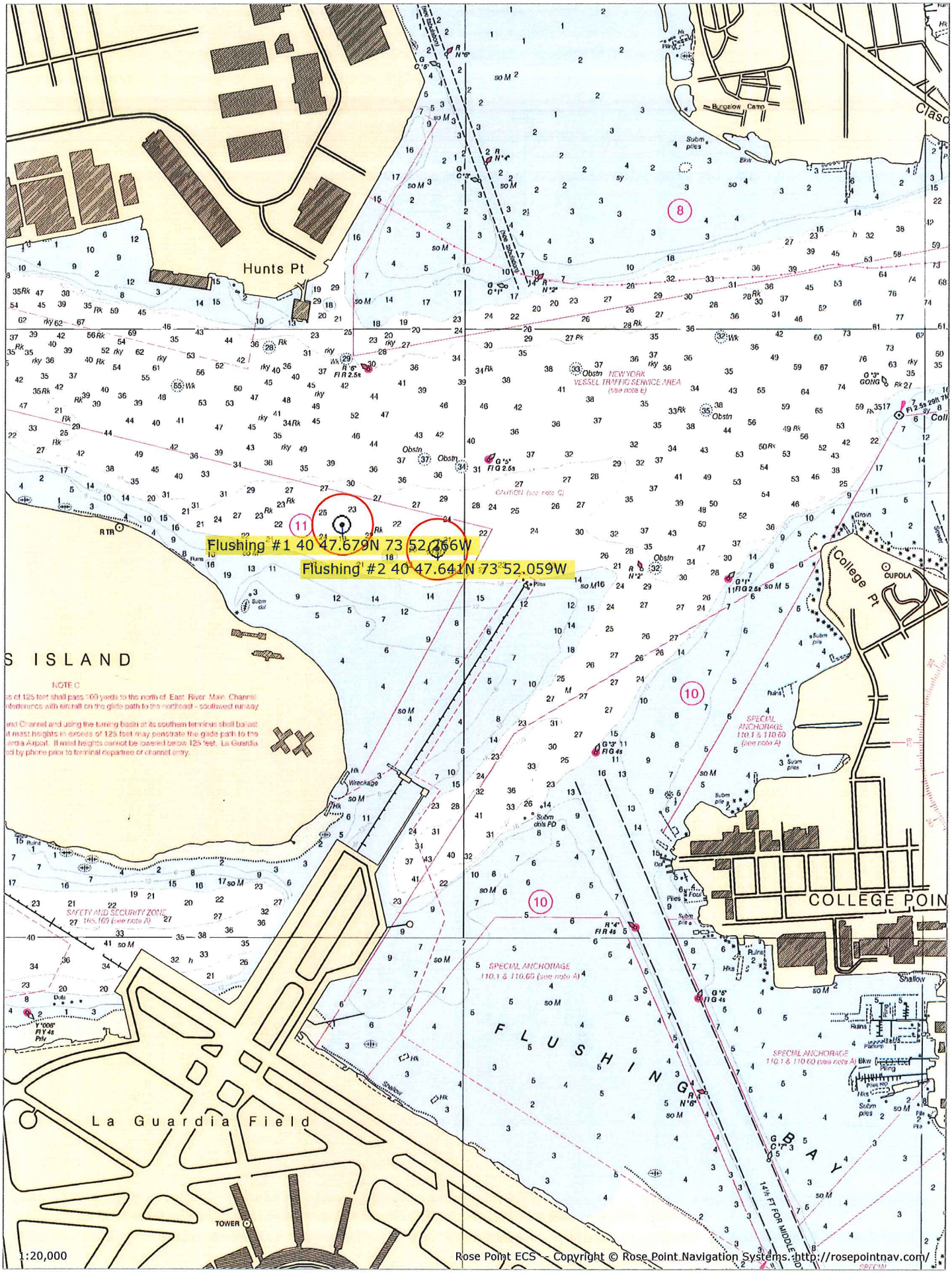
Flushing #1 40 47.679N 73 52.066W
Flushing #2 40 47.641N 73 52.059W
Hunts Pt
Bungalow Camp
NEW YORK VESSEL TRAFFIC SERVICE AREA (see note E)
CAUTION (see note C)
College Pt
CUPOLA
S ISLAND
NOTE C
SPECIAL ANCHORAGE 110.1 & 110.60 (see note A)
SAFETY AND SECURITY ZONE 165.169 (see note A)
COLLEGE POIN
FLUSHING BAY
14½ FT FOR MIDDLE
La Guardia Field
TOWER
1:20,000
Rose Point ECS -- Copyright © Rose Point Navigation Systems. http://rosepointnav.com/

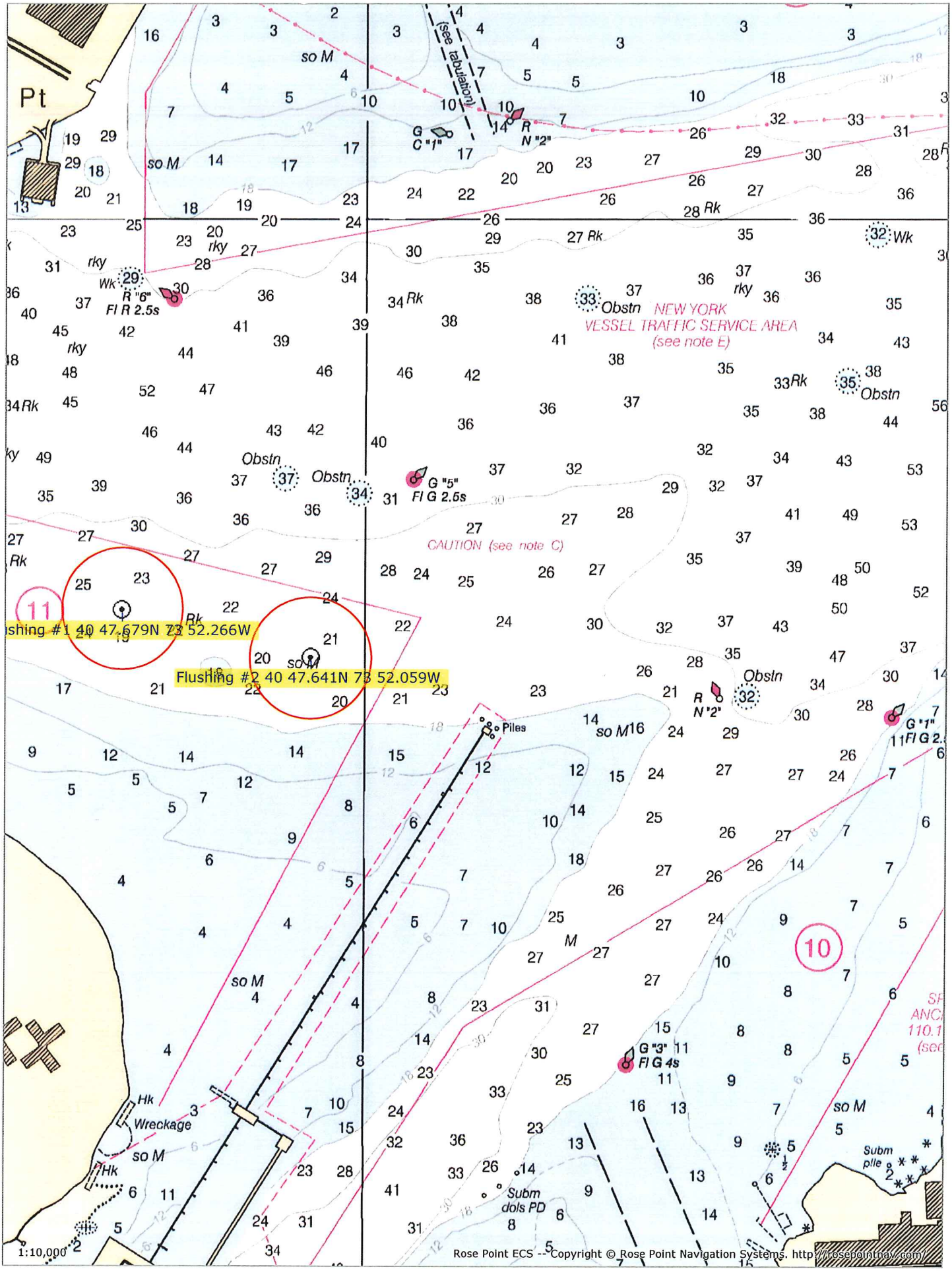
Pt
so M
(see tabulation)
G
C "1"
R
N "2"
Wk
R "6"
Fl R 2.5s
rky
Rk
Obstn
NEW YORK
VESSEL TRAFFIC SERVICE AREA
(see note E)
G "5"
Fl G 2.5s
CAUTION (see note C)
11
shing #1 40 47.679N 73 52.266W
Flushing #2 40 47.641N 73 52.059W
Piles
G "1"
Fl G 2.
10
G "3"
Fl G 4s
Hk
Wreckage
Subm
dols PD
Subm
pile
1:10,000
Rose Point ECS -- Copyright © Rose Point Navigation Systems, http://rosepointnav.com/

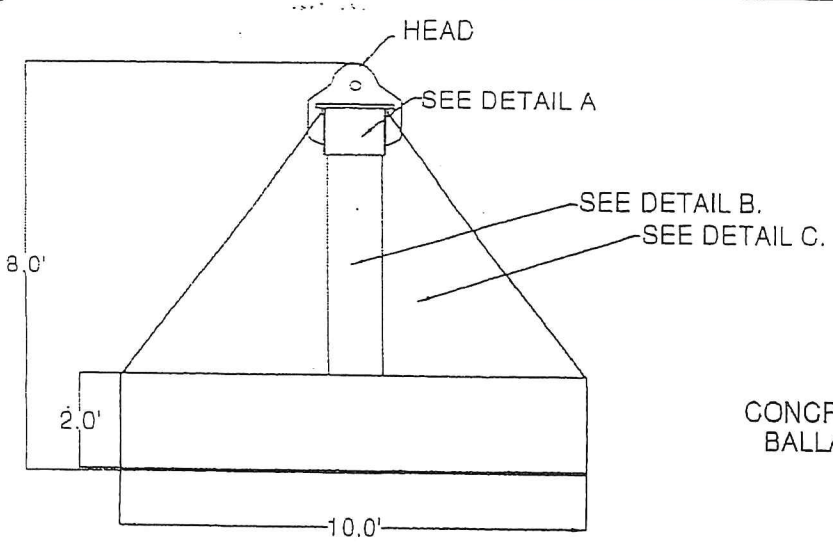

ANCHOR-FRONT VIEW
(19,450 LBS. TYP.)

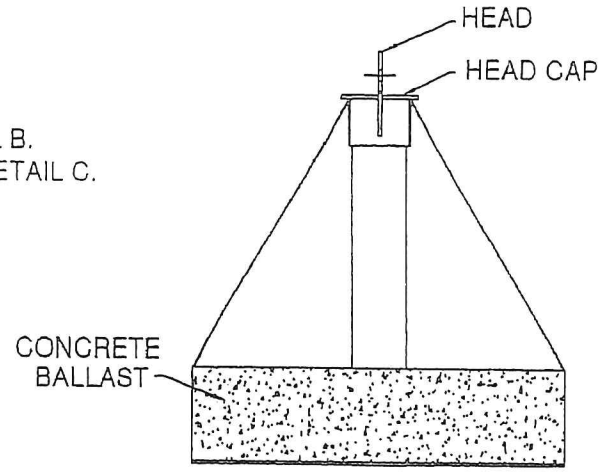

ANCHOR LEFT VIEW-
BALLAST DETAIL

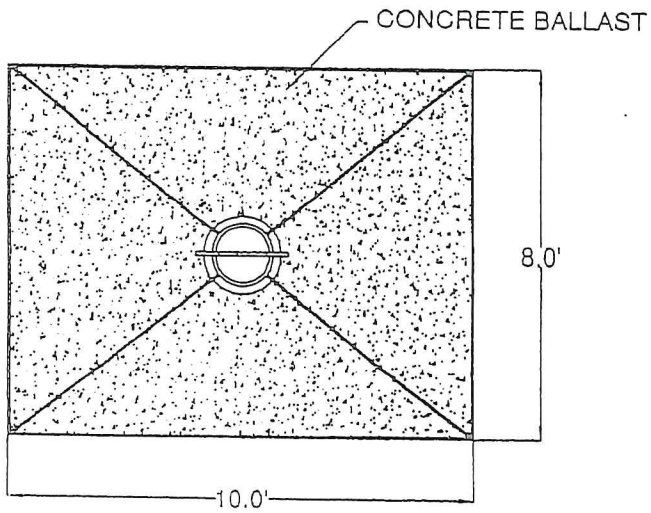

ANCHOR BALLAST DETAIL- TOP VIEW

ANCHOR DETAILS

General Notes

No.	Revision/Issue	Date

MOORING BUOY
DETAIL

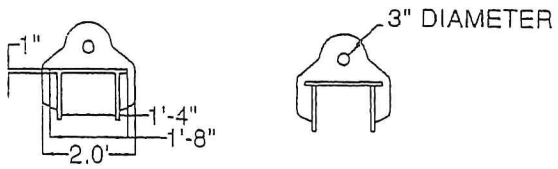

DETAIL A.

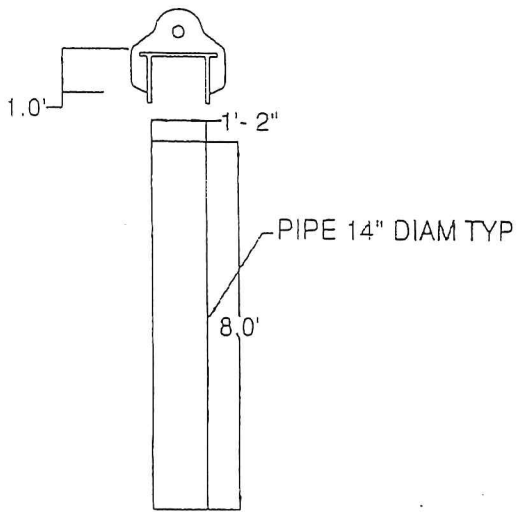

DETAIL B.

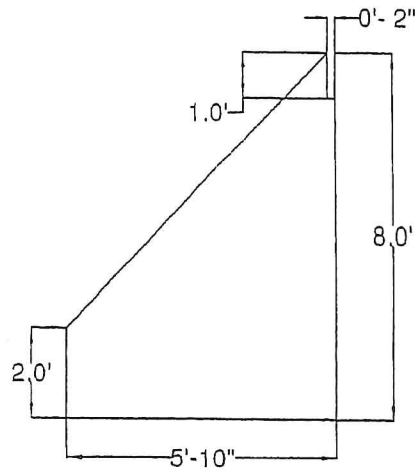

DETAIL C.

ANCHOR DETAILS A, B, AND C

General Notes

No.	Revision/Issue	Date
1	ANNOTATION EDITS	

Application Identification Number

Applicant Name and Address

Project: MOORING

Sheet: MOORING BUOY DETAIL

1/4 = 1 FT

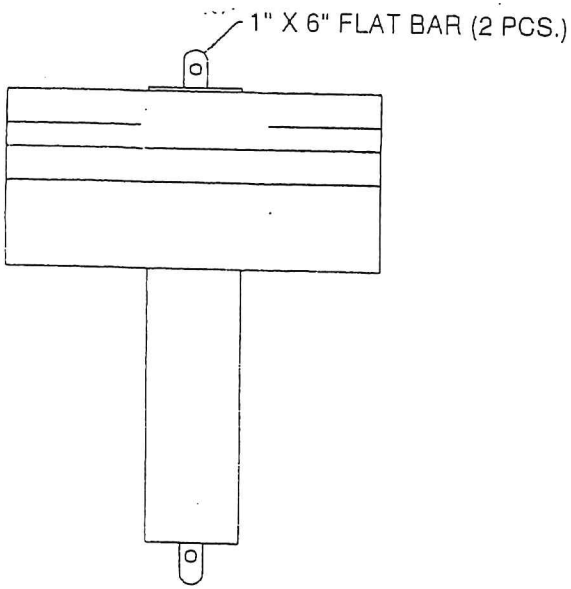

MOORING BUOY
(5,400 LBS. TYP.)

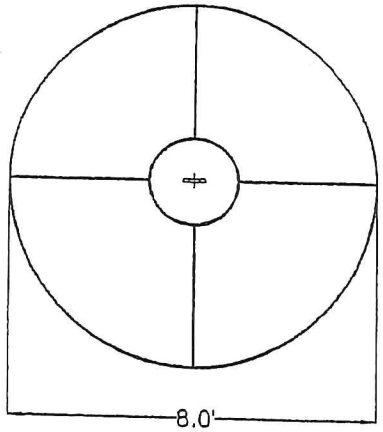

TOP VIEW - MOORING BUOY

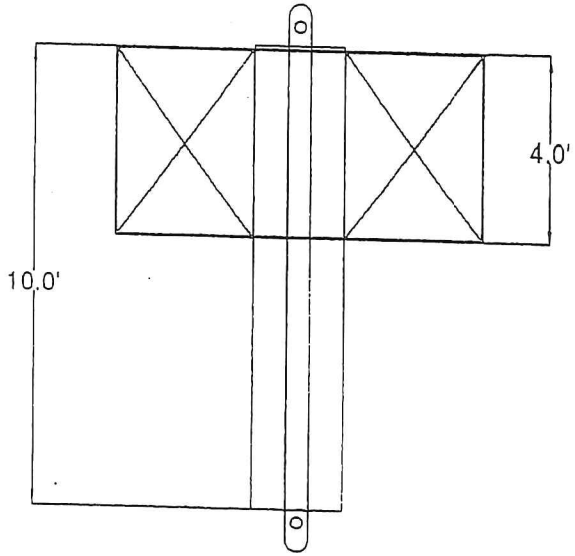

LEFT OR RIGHT VIEW - MOORING BUOY

General Notes

No.	Revision/Issue	Date
1	ANNOTATION EDITS	12/8/08

Application Identification Number

Applicant Name and Address

Project: MOORING

Sheet: MOORING BUOY DETAIL

Scale: 1/4" = 1 FT