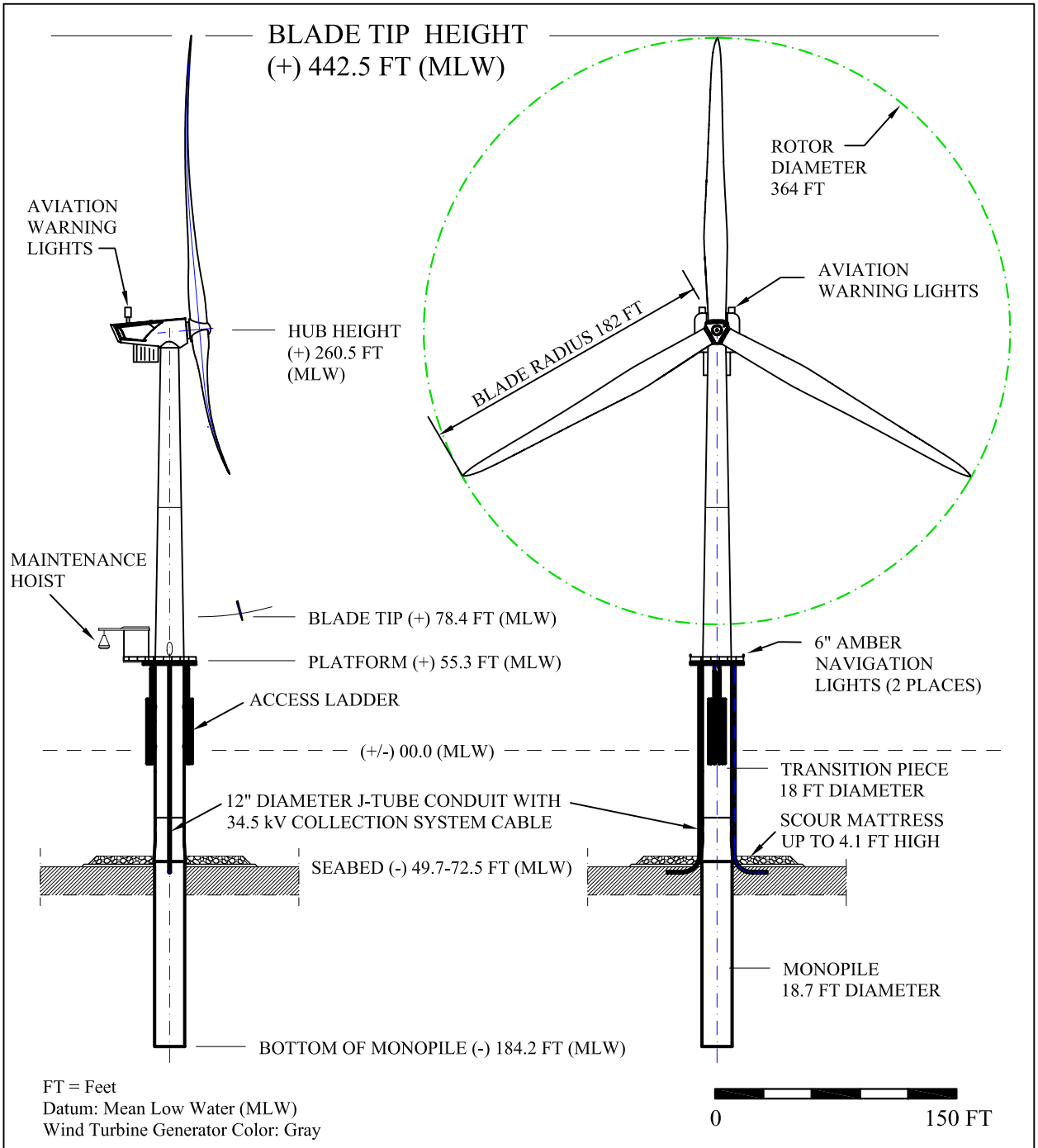

Purpose: Wind Park and Interconnection Cables	PROPOSED WIND TURBINE GENERATOR PROFILE WITH MONOPILE FOUNDATION	**Location:** S. of Jones Beach Island, NY **Water Body:** Atlantic Ocean
Prepared by: Long Island Offshore Wind Park, LLC **Date:** 4/11/05	**LONG ISLAND OFFSHORE WIND PARK**	**Sheet 5 of 28**
USACE Application No: 2005-00365	**Applicant:** Long Island Offshore Wind Park, LLC and Long Island Power Authority	**Drawing No. 0591-001**

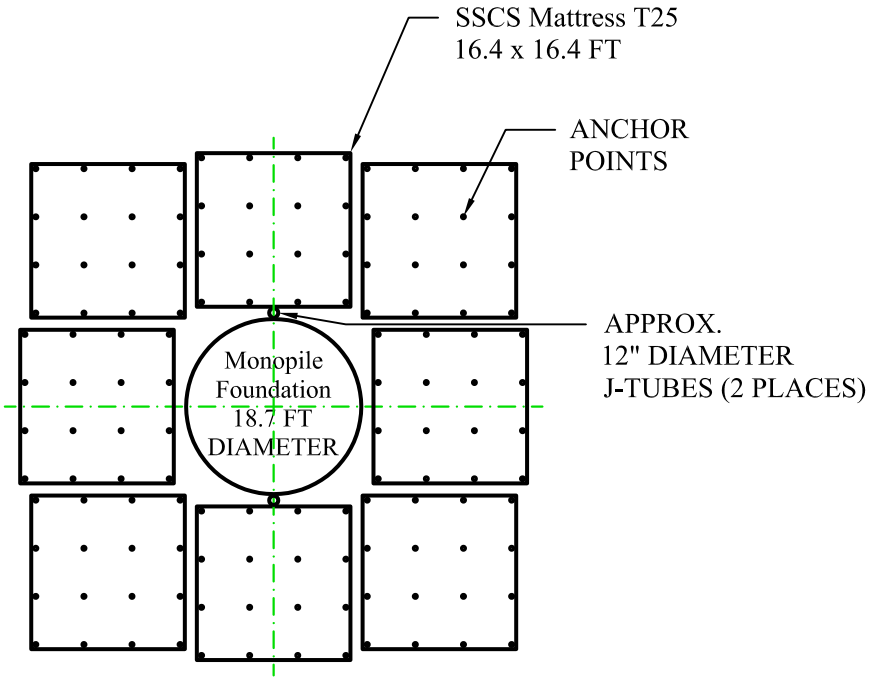

Notes:

1. Mats for scour protection as indicated on this drawing to be by SEABED SCOUR CONTROL SYSTEM LTD. T25 = Type 25 scour control mat 16.4 x 16.4 FT with 4.1FT fronds and 16 anchors.

2. Total area of disturbance for each monopile with scour control is approximately 2,862 square feet.

0 30 FT

Purpose: Wind Park and Interconnection Cables	TYPICAL SCOUR CONTROL LAYOUT WITH MONOPILE FOUNDATION	**Location:** S. of Jones Beach Island, NY **Water Body:** Atlantic Ocean
Prepared by: Long Island Offshore Wind Park, LLC **Date:** 4/11/05	**LONG ISLAND OFFSHORE WIND PARK**	**Sheet 6 of 28**
USACE Application No: 2005-00365	**Applicant:** Long Island Offshore Wind Park, LLC and Long Island Power Authority	**Drawing No. 0591-002**

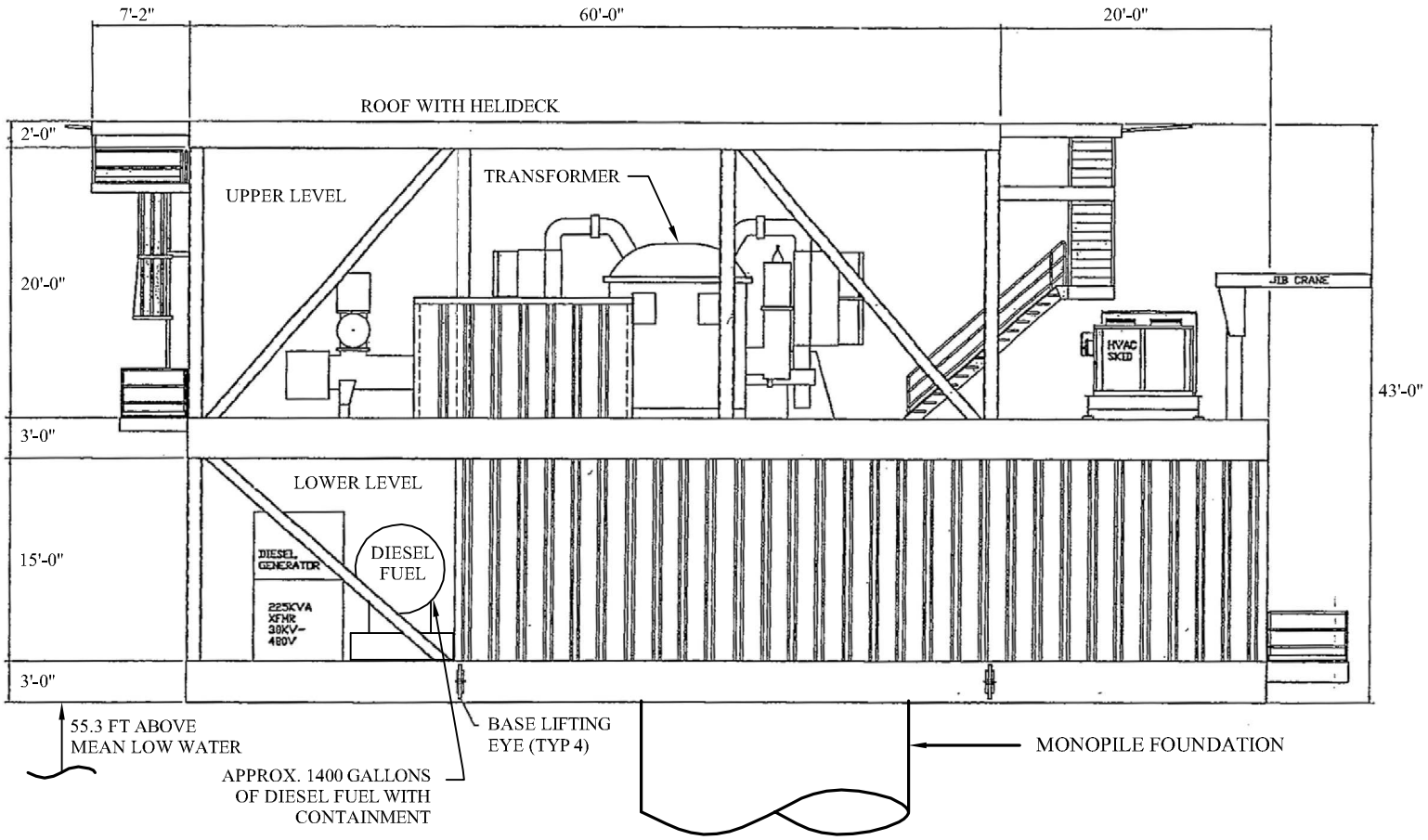

SUBSTATION ELEVATION

NOTE: USCG APPROVED OIL SPILL RESPONSE PLAN REQUIRED

Purpose: Wind Park and Interconnection Cables	TYPICAL 138 / 34.5 kV OFFSHORE SUBSTATION MODULE FRONT ELEVATION	**Location:** S. of Jones Beach Island, NY **Water Body:** Atlantic Ocean
Prepared by: Long Island Offshore Wind Park, LLC **Date:** 4/11/05	**LONG ISLAND OFFSHORE WIND PARK**	**Sheet 7 of 28**
USACE **Application No:** 2005-00365	**Applicant:** Long Island Offshore Wind Park, LLC and Long Island Power Authority	**Drawing No.** **0591-003**

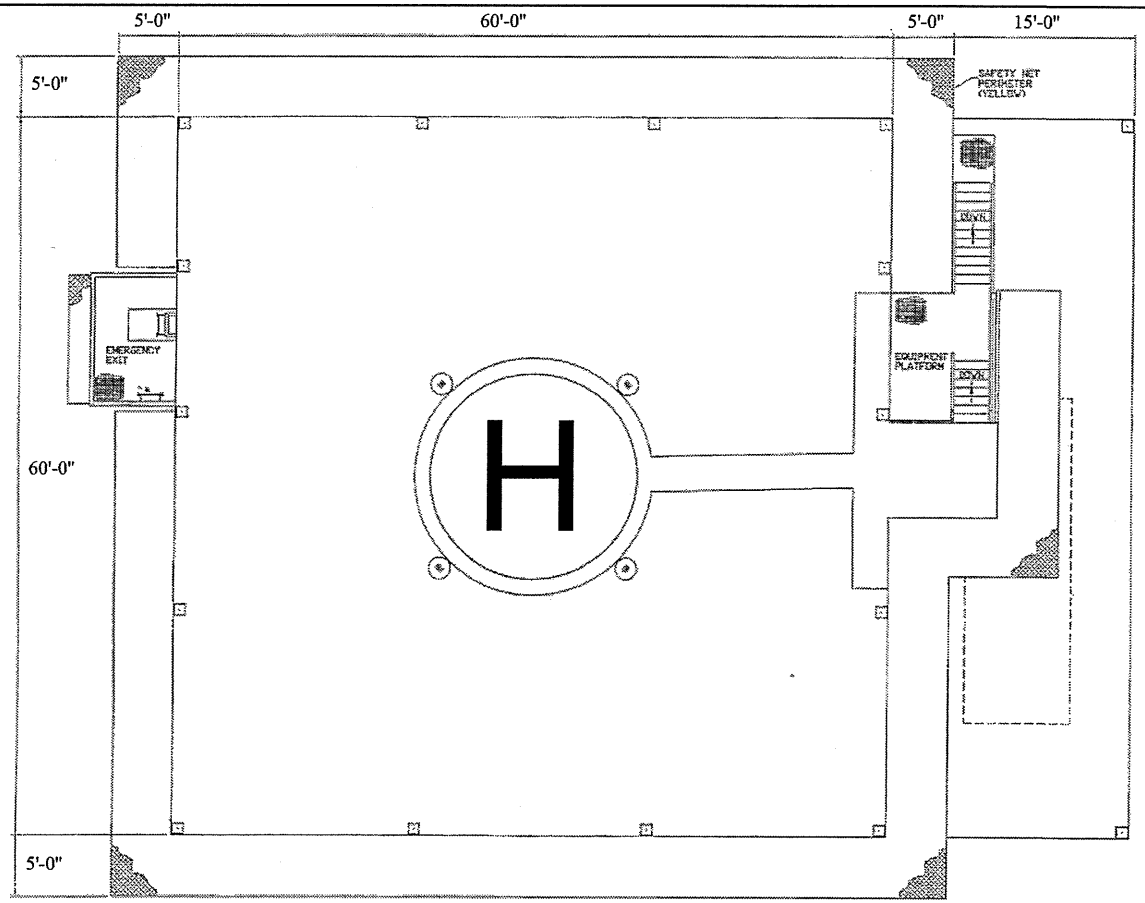

HELIDECK LAYOUT

Purpose: Wind Park and Interconnection Cables	TYPICAL 138 / 34.5 kV SUBSTATION MODULE PLAN VIEW - ROOF WITH HELIDECK	**Location:** S. of Jones Beach Island, NY **Water Body:** Atlantic Ocean
Prepared by: Long Island Offshore Wind Park, LLC **Date:** 4/11/05	**LONG ISLAND OFFSHORE WIND PARK**	**Sheet 8 of 28**
USACE **Application No:** 2005-00365	**Applicant:** Long Island Offshore Wind Park, LLC and Long Island Power Authority	**Drawing No.** **0591-004**

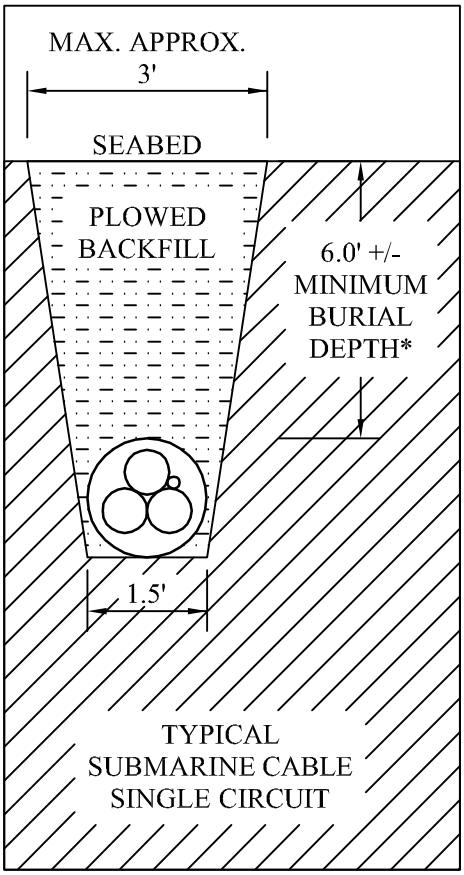

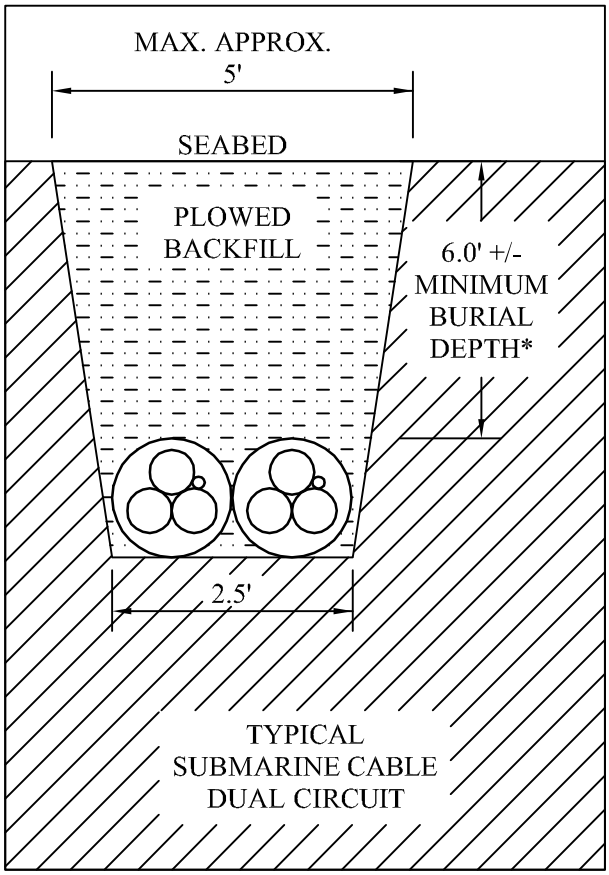

* Depth is reduced as required near terminal points.

NOT TO SCALE

Purpose: Wind Park and Interconnection Cables	COLLECTION SYSTEM 34.5 kV CABLE TYPICAL CROSS SECTIONS FOR JET PLOW EMBEDMENT IN ATLANTIC OCEAN	**Location:** S. of Jones Beach Island, NY **Water Body:** Atlantic Ocean
Prepared by: Long Island Offshore Wind Park, LLC **Date:** 4/11/05	**LONG ISLAND OFFSHORE WIND PARK**	**Sheet 9 of 28**
USACE **Application No:** 2005-00365	**Applicant:** Long Island Offshore Wind Park, LLC and Long Island Power Authority	**Drawing No.** **0591-005**

Shallow Water Installation – Great South Bay (typical)

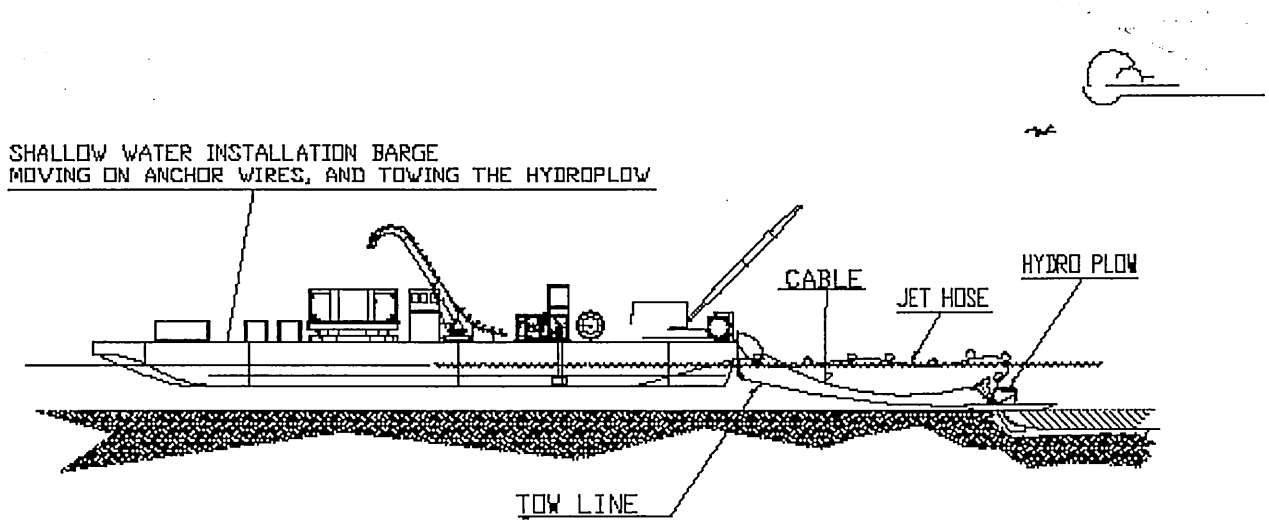

Deep Water Installation – Atlantic Ocean (typical)

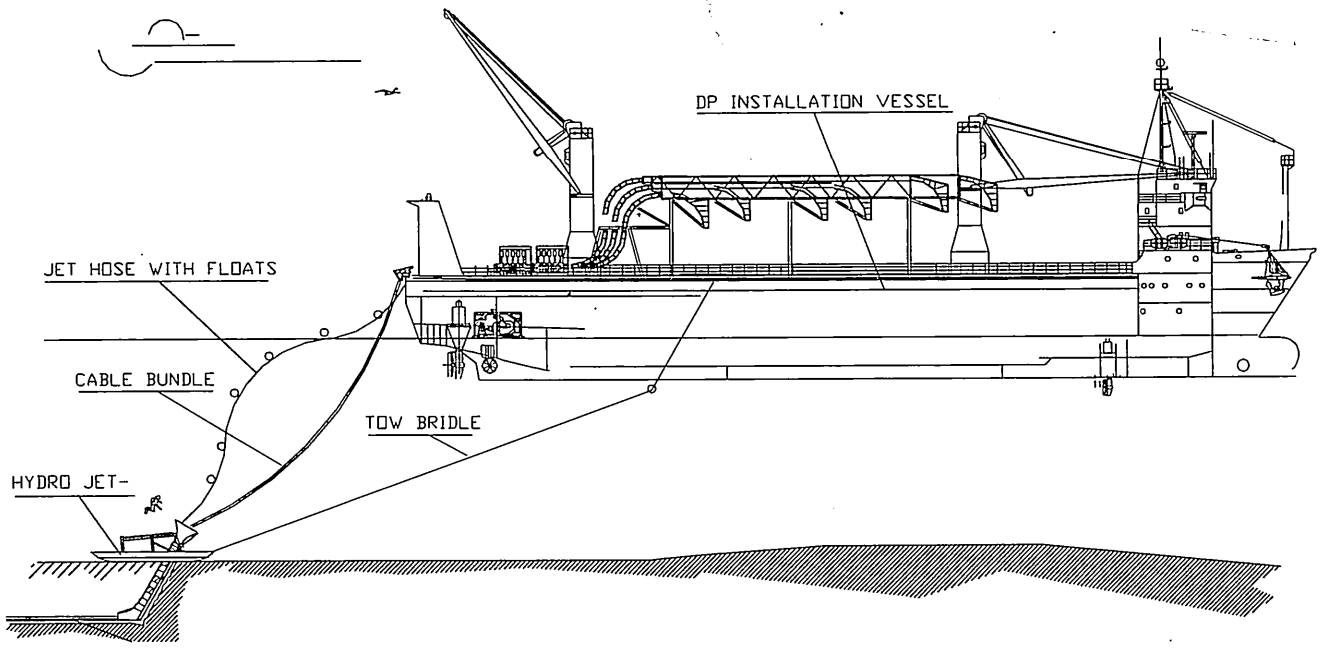

Purpose: WIND PARK AND INTERCONNECTION CABLES	JET PLOW EMBEDMENT OF SUBMARINE CABLES	**Location:** North & South of Jones Beach Island,NY **Water Body:** Atlantic Ocean & Great South Bay
Prepared by: Long Island Offshore Wind Park, LLC **Date:** 5/13/05	**LONG ISLAND OFFSHORE WIND PARK**	**Sheet 10 of 28**
USACE Application No: 2005-00365	**Applicant:** Long Island Offshore Wind Park, LLC and Long Island Power Authority	**Drawing No.**

Typical Medium-Low Intensity Aviation Lights

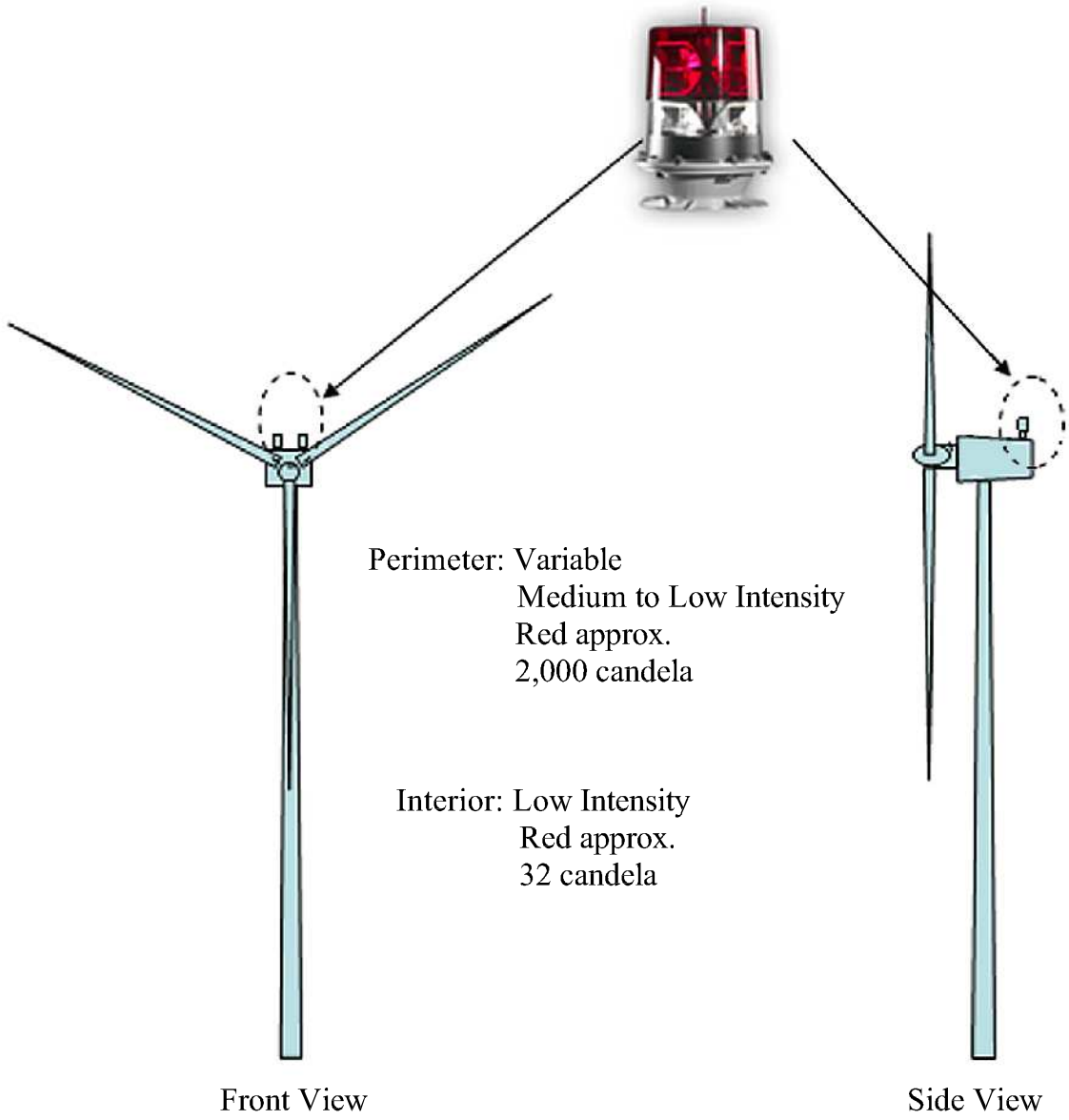

Purpose: Wind Park and Interconnection Cables	TYPICAL AVIATION WARNING LIGHTS	**Location:** S. of Jones Beach Island, NY **Water Body:** Atlantic Ocean
Prepared by: Long Island Offshore Wind Park, LLC **Date:** 4/11/05	**LONG ISLAND OFFSHORE WIND PARK**	**Sheet 11 of 28**
USACE **Application No:** 2005-00365	**Applicant:** Long Island Offshore Wind Park, LLC and Long Island Power Authority	**Drawing No.** **0591-006**