UPPER PASSAIC RIVER FLOOD CONTROL
LONG HILL TOWNSHIP, NEW JERSEY
N.Y. DISTRICT, U.S. ARMY CORPS OF ENGINEERS

DETAILED PROJECT REPORT

APPENDIX C – FINAL ENGINEERING AND DESIGN

October 2004

UPPER PASSAIC RIVER FLOOD CONTROL

DETAILED PROJECT REPORT

LONG HILL TOWNSHIP, NEW JERSEY

APPENDIX C

ENGINEERING DESIGN

TABLE OF CONTENTS

Project Description for Storm Damage Reduction C-1

Major Project Features C-2

DRAWINGS

C-1 Sheet 1 – Floodwall Alignment
C-2 Sheet 2 – Floodwall Alignment
C-3 Sheet 3 – Floodwall Alignment
C-4 Valley Road Road Raising Plan
C-5 Valley Road – Road Raising - Profile
C-6 South Main Ave. Road Raising Plan
C-7 S. Warren Ave. Road Raising Plan
C-8 Road Raising Profiles & Sections Warren & Main Avenues
C-9 Sluice Gate at Sta. 0 + 75
C-10 Sluice Gate at Sta. 31 + 15
C-11 Sluice Gate at Valley Road Road Raising
C-12 Floodwall Details
C-13 Flood Panel Details

Project Description for Storm Damage Reduction

A1. The project area is located in the watershed of the Passaic River in Middlesex County, New Jersey, in Long Hill Township. The Recommended Plan generally consists of one levee/floodwall construction with two sluice gate closure structures on the western side of the township and a sluice gate closure structure and a road raising on the eastern side of the town. Improvements are designed to provide protection against flooding up to a 100-year recurrence interval. Two top of protection elevations are utilized; the 100-year flood elevation at +216.2 NGVD and +216.7 NGVD. In the event of overtopping of the line of protection, overflow will initially occur in paved areas with backyards and homes remaining protected from erosion damages. The two elements of the project are designated as: the Western Segment and the Eastern Segment. Protected areas are not subject to interior flooding from surface runoff from rainfall, therefore no interior drainage facilities are provided other than drainage swales associated with the floodwall. The location of each of the elements and associated features are shown in Figures 1 through 10 and are described in the following sections.

A2. **Western Segment.** The Western Segment of the line of protection is located south of Passaic Valley Road and running roughly parallel to it between the Loudenberry Meadow Senior Condominium Development and Poplar Avenue. Top of protection is at elevation +216.7 ft and 216.2 ft NGVD, depending on location. The grade elevations along the entire line of protection range between +210.8 and +214 ft. NGVD excusive of the ends. The height of protection above grade ranges between 2.2 feet and 5.4 feet going to 0 at either end. The levee has a 15-ft. wide crest with side slopes of 3 ft. horizontal to 1.0 ft. vertical and a maximum height of 4.5 feet. Due to its relatively low height, no core or cutoff wall is required. The floodwall reaches consist of continuous watertight sheet pile driven 11 feet into the soil, which is a dense clay.

A3. The line of protection, with a total of 3996 feet of floodwall and 61 feet of levee, begins Station 0+00 at the northwestern end as a levee starting at a point approximately 280 feet south of Passaic Valley Road in the Loudenberry Meadow Senior Condominium Development. There will be a maintenance vehicle access to the top of the levee at this point. The levee then extends in a easterly direction to a stream channel which is also the edge of the condominium property. The top of levee is at +216.7 NGVD. Adjacent to the levee is a sluice gate structure housing a 48” x 48” sluice gate in a concrete structure, which extends through the channel to a point approximately 15 feet east of the channel. At that location is the start of the floodwall, which was selected to minimize damage to wetlands. The wall runs in an easterly direction for approximately 210 feet where it turns to the northeast and continues on for 90 feet. The wall then turns back to an easterly direction for approximately 400 feet before turning back to the northeast for approximately 170 feet. At that point, the wall turns north for approximately 135 feet to a point 15 feet south of Passaic Valley Road. Up to this point, the top of wall elevation is +216.7 NGVD. Upon reaching this point, the wall turns east for 220 feet before turning south. This segment of the wall is at elevation +216.2 NGVD and is an overflow section. After turning south, the wall elevation returns to +216.7 NGVD and continues south for 180 feet then turns east for 245 feet, crossing South Main Street. At South Main Street, the road is raised to cross over the wall to provide vehicular access. The elevation of the road crossing is +216.2 NGVD. Fifteen feet east of South Main, the wall turns to the southeast for 30 feet before turning back to an easterly direction for 270 feet. At this point, the wall elevation changes to +216.2 NGVD and turns to a southerly direction for 25 feet then turning in an easterly direction for 140 feet. The wall then turns to the

northeast for 175 feet then turning in an easterly direction for 265 feet through the PSE&G easement. Upon entering the Transco Gas Pipeline easement, the wall ends and a 40 foot levee segment crosses the easement, running in a southeasterly direction. The levee segment allows crossing of the pipeline and is at elevation +216.7 to limit damage due to erosion in the event of an overtopping. Upon exiting the easement, the floodwall resumes, in a southerly direction for 125 feet, parallel to Warren Avenue. The wall elevation is +216.2 NGVD. The wall then turns easterly for 270 feet to a 16 foot wide concrete sluice gate structure containing 2 60" x 84" sluice gates. Warren Avenue is raised over the wall to provide access to Municipal facilities south of the wall. The floodwall resumes heading south from the sluice gate structure for 195 feet along the western edge of the supermarket parking lot. The wall then turns in an easterly direction for the final 714 feet, generally following the edge of the parking lot with the exception of a shift to the south to allow the inclusion of an electric transformer.

A4. **Eastern Segment**. The Eastern Segment of the line of protection is located along Valley Road, east of Western Boulevard. This segment consists of a 48"X144" concrete sluice gate structure on the stream with sheet piling to tie it into the road embankment. Valley Road is raised to a minimum elevation of +216.2 NGVD to act as a levee. In order to achieve proper roadway vertical curve geometry, 780 feet of Valley Road will be repaved, along with portions of two driveways and a parking area. The two sheet pile walls are each approximately 45 feet long. With a top elevation of +216.2 NGVD, the height of protection will be approximately 8 feet.

Major Project Features

A5. **Criteria**. The following design references were used;

EM 1110-2-2504, DESIGN OF SHEET PILE WALLS
EM 1110-2-1913 DESIGN AND CONSTRUCTION OF LEVEES
ACI Code
These Engineering Manuals will be followed during the remaining stages of design as will
EM 1110-2-2104 STRENGTH DESIGN FOR REINFORCED-CONCRETE HYDRAULIC STRUCTURES

The floodwall section was analyzed for the following conditions:

1.	Freestanding wall height:	5.0 feet
2.	Top of wall elevation:	217.0
3.	Ground elevation:	212.0
4.	Pile tip elevation:	201.0
5.	Flood level:	Top of wall (217.0)
6.	Material:	Shoreguard 950 vinyl sheet piling
7.	Maximum deflection:	1.0 inch

A6. **Levees and Floodwalls.** Levees and floodwalls comprise the majority of the line of protection for the Upper Passaic River project, and represent one of the most significant construction features of the project.

A7. **Levees.** The earthen levee segments are constructed by placing select structural fill in 12" maximum lifts and compacting to 95% MDD using vibratory equipment. These fills are reinforced with geotextile fabric. In addition to the western end, earthen levees are also constructed at two road crossings, South Main Ave and Warren Ave and at the crossing of the Transco gas main where sheet piling is interrupted.

A8. **Floodwalls.** A watertight jointed vinyl sheet pile floodwall will be driven 10 feet into the dense clay soil which makes up most of the area. A single sheet pile driving crew will install the sheeting. 15 foot long sheets are used with an average driven depth of 10 feet. No cap or waler system is included. Sheets are cut off at a uniform top elevation. Vinyl sheet piling was selected for this project because of its' lighter weight which would make for easier handling and possibly less environmental damage during construction. In this installation, the vinyl sheet pile wall will only be about 5 feet high at its' highest point. Prior to overtopping, this wall is anticipated to defect about 1 inch. Due to the nature of the flooding in the area, failure of a portion of the wall will not result in catastrophic damages. However, since this is a feasibility level design, the wall material will be reviewed in the Final Design Phase and possibly replaced with steel sheet piling.

A9. **Sluice Gate Closure Structures.** Sluice gate structures are constructed on the three tributary streams feeding the Passaic River. A diversion trench will be dug to provide continuous stream flow during the period of gate construction and filled after the structure is completed. It will be necessary to drive timber friction piles to support the structures. The concrete structures consisting of a reinforced concrete pile cap/footing and a vertical supporting wall are formed and poured prior to driving sheet piling. Sections of sheet piling are embedded in the concrete structure and act as terminus points for the sheet pile wall. Sluice gates are thru bolted through the wall after the concrete has attained sufficient strength to support the dead load. The sluice gates are operated with an electric motor actuator. Power for the actuator is provided at an electric power drop/pole proximate to each gate. The actual gates vary in size.

DATE	REVISIONS (READ UP)	BY

DEPARTMENT OF THE ARMY	USING SERVICE
LOCATION OF PROJECT	TRANSPORTATION FACILITIES
STATE NEW JERSEY	RAILROADS
COUNTY MORRIS	STATE ROADS
DIVISION NORTH ATLANTIC	FEDERAL ROADS
DISTRICT BALTIMORE	AIRLINES
ARMY AREA	
PROJECT SITE LOCATED APPROXIMATELY MILES S OF SOMERSET AIRPORT	
PROJECT SITE LOCATED APPROXIMATELY MILES E OF MILLINGTON	

100 SCALE FLOOD WALL PLAN - 1 OF 3

DEPARTMENT OF THE ARMY
U. S. ARMY ENGINEER DISTRICT, BALTIMORE
CORPS OF ENGINEERS
NORTH ATLANTIC DIVISION

DRAWN BY:
TRACED BY:
CHECKED BY:
SUBMITTED BY:
CADASTRAL
RECOMMENDED BY:
CHIEF, P&C BRANCH

UPPER PASSAIC RIVER AND TRIBUTARIES
NEW JERSEY FLOOD PROTECTION AND ENVIRONMENTAL RESTORATION FEASIBILITY STUDY
LONG HILL TOWNSHIP, MORRIS COUNTY, NJ

APPROVED BY:
DATE
CHIEF, REAL ESTATE DIVISION

US ARMY CORPS OF ENGINEERS, WASH DC 20314

INSTALLATION OR PROJECT NO.
SHEET OF
DRAWING NO. 1

FILE NAME:

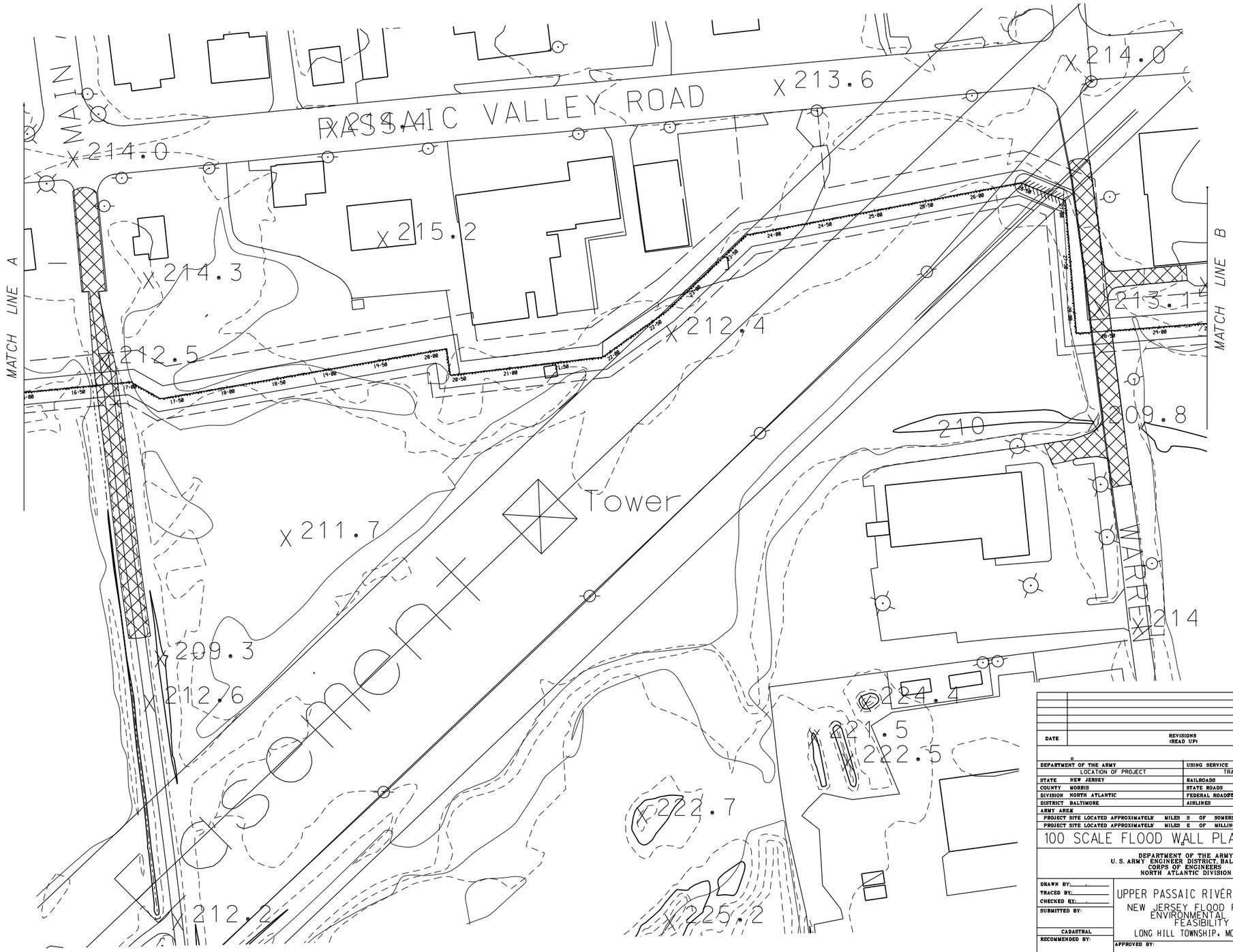

DATE	REVISIONS (READ UP)	BY

DEPARTMENT OF THE ARMY	USING SERVICE
LOCATION OF PROJECT	TRANSPORTATION FACILITIES
STATE NEW JERSEY	RAILROADS
COUNTY MORRIS	STATE ROADS
DIVISION NORTH ATLANTIC	FEDERAL ROADS
DISTRICT BALTIMORE	AIRLINES
ARMY AREA	
PROJECT SITE LOCATED APPROXIMATELY MILES S OF SOMERSET AIRPORT	
PROJECT SITE LOCATED APPROXIMATELY MILES E OF MILLINGTON	

100 SCALE FLOOD WALL PLAN - 2 OF 3

DEPARTMENT OF THE ARMY
U. S. ARMY ENGINEER DISTRICT, BALTIMORE
CORPS OF ENGINEERS
NORTH ATLANTIC DIVISION

DRAWN BY:
TRACED BY:
CHECKED BY:
SUBMITTED BY:
CADASTRAL
RECOMMENDED BY:
CHIEF, P&C BRANCH

UPPER PASSAIC RIVER AND TRIBUTARIES
NEW JERSEY FLOOD PROTECTION AND ENVIRONMENTAL RESTORATION FEASIBILITY STUDY
LONG HILL TOWNSHIP, MORRIS COUNTY, NJ

APPROVED BY:
DATE
CHIEF, REAL ESTATE DIVISION

US ARMY CORPS OF ENGINEERS, WASH DC 20314

INSTALLATION OR PROJECT NO.
SHEET OF
DRAWING NO. 2

FILE NAME:

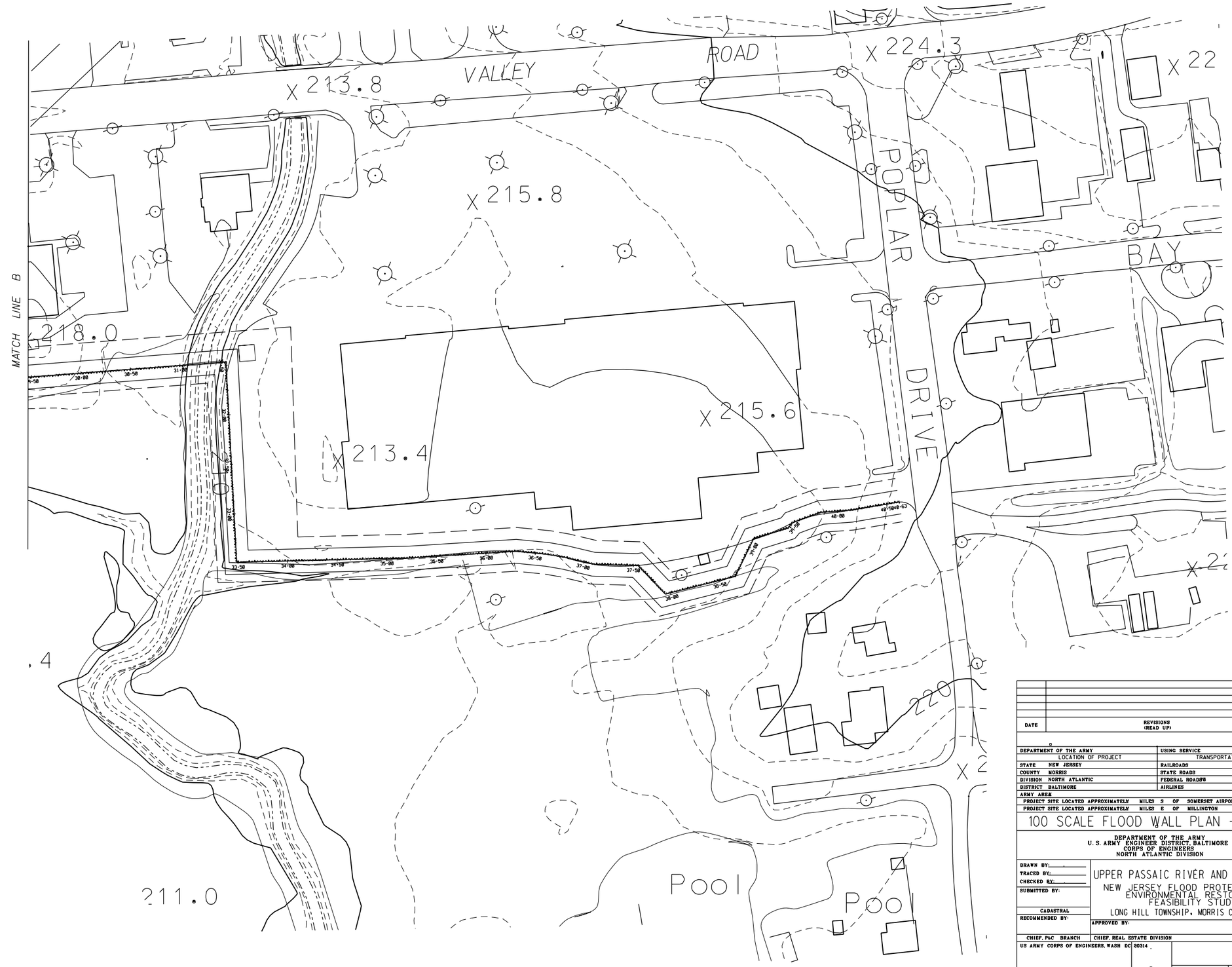

DATE	REVISIONS (READ UP)	BY

DEPARTMENT OF THE ARMY	USING SERVICE
LOCATION OF PROJECT	TRANSPORTATION FACILITIES
STATE NEW JERSEY	RAILROADS
COUNTY MORRIS	STATE ROADS
DIVISION NORTH ATLANTIC	FEDERAL ROADS
DISTRICT BALTIMORE	AIRLINES
ARMY AREA	
PROJECT SITE LOCATED APPROXIMATELY MILES S OF SOMERSET AIRPORT	
PROJECT SITE LOCATED APPROXIMATELY MILES E OF MILLINGTON	

100 SCALE FLOOD WALL PLAN - 3 OF 3

DEPARTMENT OF THE ARMY
U. S. ARMY ENGINEER DISTRICT, BALTIMORE
CORPS OF ENGINEERS
NORTH ATLANTIC DIVISION

DRAWN BY:
TRACED BY:
CHECKED BY:
SUBMITTED BY:
CADASTRAL
RECOMMENDED BY:
CHIEF, P&C BRANCH

UPPER PASSAIC RIVER AND TRIBUTARIES
NEW JERSEY FLOOD PROTECTION AND ENVIRONMENTAL RESTORATION FEASIBILITY STUDY
LONG HILL TOWNSHIP, MORRIS COUNTY, NJ

APPROVED BY:
DATE
CHIEF, REAL ESTATE DIVISION

US ARMY CORPS OF ENGINEERS, WASH DC 20314

INSTALLATION OR PROJECT NO.
SHEET OF
DRAWING NO. 3

FILE NAME:

CORPS OF ENGINEERS U. S. ARMY

DATE	REVISIONS (READ UP)	BY

DEPARTMENT OF THE ARMY	USING SERVICE
LOCATION OF PROJECT	TRANSPORTATION FACILITIES
STATE NEW JERSEY	RAILROADS
COUNTY MORRIS	STATE ROADS
DIVISION NORTH ATLANTIC	FEDERAL ROADS
DISTRICT BALTIMORE	AIRLINES
ARMY AREA	
PROJECT SITE LOCATED APPROXIMATELY MILES S OF SOMERSET AIRPORT	
PROJECT SITE LOCATED APPROXIMATELY MILES E OF MILLINGTON	

VALLEY ROAD RAISING

DEPARTMENT OF THE ARMY
U. S. ARMY ENGINEER DISTRICT, BALTIMORE
CORPS OF ENGINEERS
NORTH ATLANTIC DIVISION

DRAWN BY:
TRACED BY:
CHECKED BY:
SUBMITTED BY:
CADASTRAL
RECOMMENDED BY:
CHIEF, P&C BRANCH

UPPER PASSAIC RIVER AND TRIBUTARIES
NEW JERSEY FLOOD PROTECTION AND ENVIRONMENTAL RESTORATION FEASIBILITY STUDY
LONG HILL TOWNSHIP, MORRIS COUNTY, NJ

APPROVED BY:
DATE
CHIEF, REAL ESTATE DIVISION

US ARMY CORPS OF ENGINEERS, WASH DC 20314

INSTALLATION OR PROJECT NO.

SHEET ___ OF ___ DRAWING NO. 4

FILE NAME:

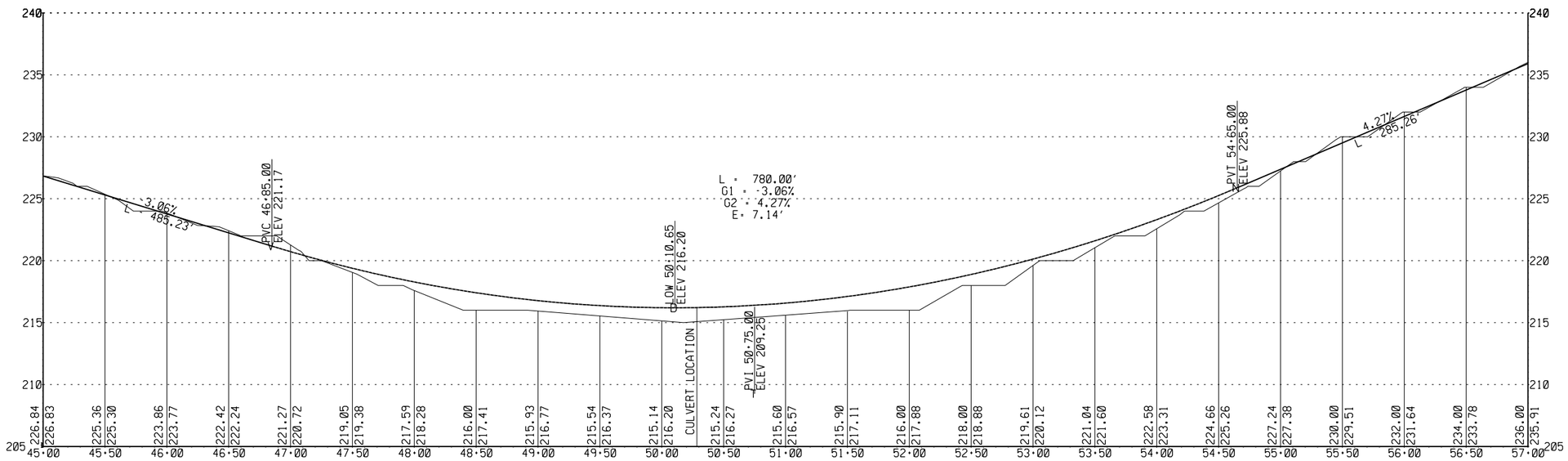

PROPOSED VALLEY ROAD PROFILE
SCALE
HORIZONTAL: 1" = 50'
VERTICAL: 1" = 5'

DATE	REVISIONS (READ UP)	BY

DEPARTMENT OF THE ARMY	USING SERVICE
LOCATION OF PROJECT	TRANSPORTATION FACILITIES
STATE NEW JERSEY	RAILROADS
COUNTY MORRIS	STATE ROADS
DIVISION NORTH ATLANTIC	FEDERAL ROADS#6
DISTRICT BALTIMORE	AIRLINES
ARMY AREA	
PROJECT SITE LOCATED APPROXIMATELY MILES S OF SOMERSET AIRPORT	
PROJECT SITE LOCATED APPROXIMATELY MILES E OF MILLINGTON	

VALLEY ROAD RAISING - PROFILE

DEPARTMENT OF THE ARMY
U. S. ARMY ENGINEER DISTRICT, BALTIMORE
CORPS OF ENGINEERS
NORTH ATLANTIC DIVISION

DRAWN BY:
TRACED BY:
CHECKED BY:
SUBMITTED BY:
CADASTRAL
RECOMMENDED BY:
CHIEF, P&C BRANCH

UPPER PASSAIC RIVER AND TRIBUTARIES
NEW JERSEY FLOOD PROTECTION AND ENVIRONMENTAL RESTORATION FEASIBILITY STUDY
LONG HILL TOWNSHIP, MORRIS COUNTY, NJ

APPROVED BY: DATE
CHIEF, REAL ESTATE DIVISION

US ARMY CORPS OF ENGINEERS, WASH DC 20314

INSTALLATION OR PROJECT NO.
SHEET OF
DRAWING NO. 5

FILE NAME:

CORPS OF ENGINEERS

U. S. ARMY

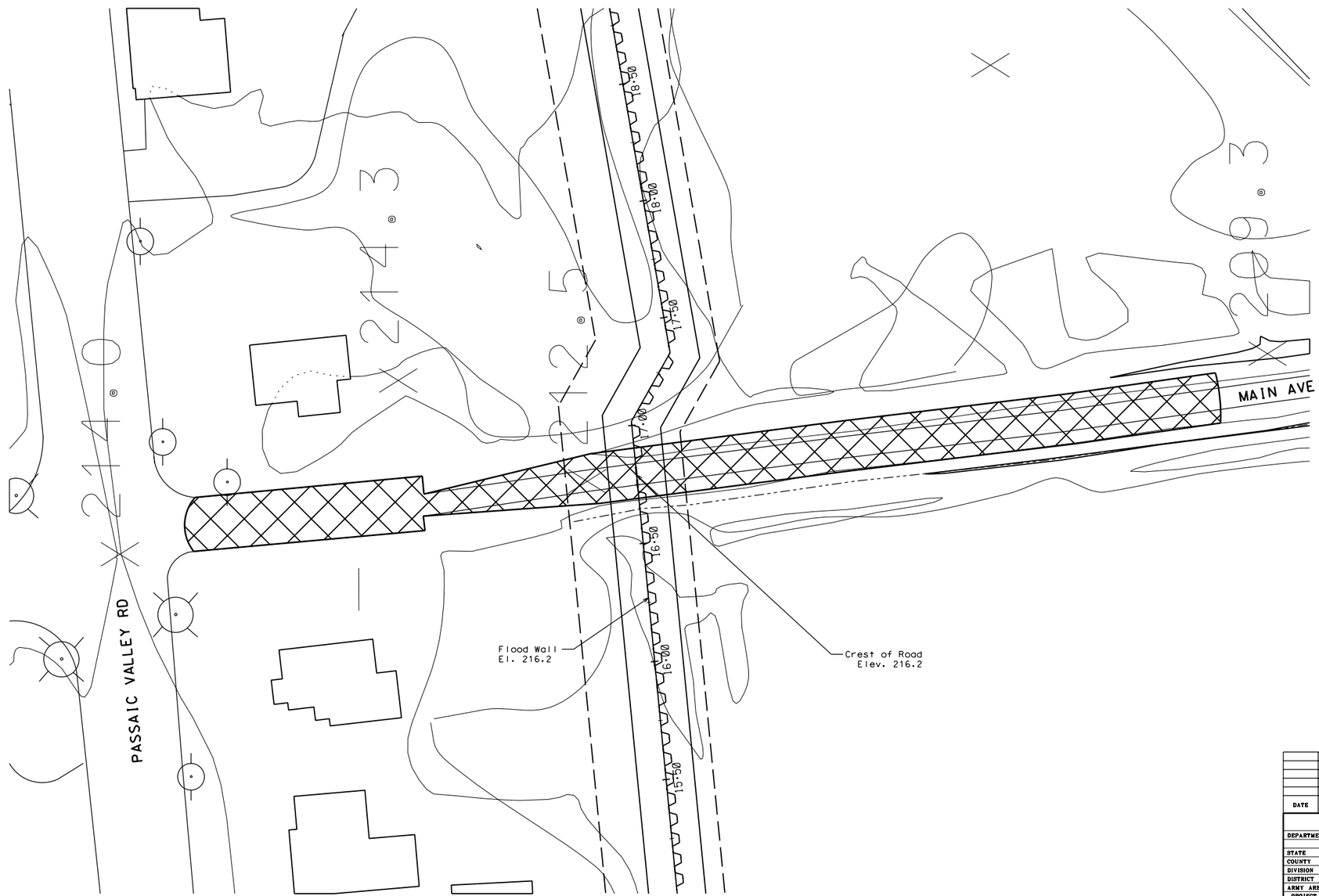

DATE	REVISIONS (READ UP)	BY

DEPARTMENT OF THE ARMY	USING SERVICE
LOCATION OF PROJECT	TRANSPORTATION FACILITIES
STATE NEW JERSEY	RAILROADS
COUNTY MORRIS	STATE ROADS
DIVISION NORTH ATLANTIC	FEDERAL ROADS
DISTRICT BALTIMORE	AIRLINES
ARMY AREA	
PROJECT SITE LOCATED APPROXIMATELY MILES S OF SOMERSET AIRPORT	
PROJECT SITE LOCATED APPROXIMATELY MILES E OF MILLINGTON	

MAIN AVENUE RAISING

DEPARTMENT OF THE ARMY
U. S. ARMY ENGINEER DISTRICT, BALTIMORE
CORPS OF ENGINEERS
NORTH ATLANTIC DIVISION

DRAWN BY:
TRACED BY:
CHECKED BY:
SUBMITTED BY:
CADASTRAL
RECOMMENDED BY:
CHIEF, P&C BRANCH

UPPER PASSAIC RIVER AND TRIBUTARIES
NEW JERSEY FLOOD PROTECTION AND ENVIRONMENTAL RESTORATION FEASIBILITY STUDY
LONG HILL TOWNSHIP, MORRIS COUNTY, NJ

APPROVED BY:
DATE
CHIEF, REAL ESTATE DIVISION

US ARMY CORPS OF ENGINEERS, WASH DC 20314

INSTALLATION OR PROJECT NO.

SHEET ___ OF ___

DRAWING NO. 6

FILE NAME:

CORPS OF ENGINEERS

U. S. ARMY

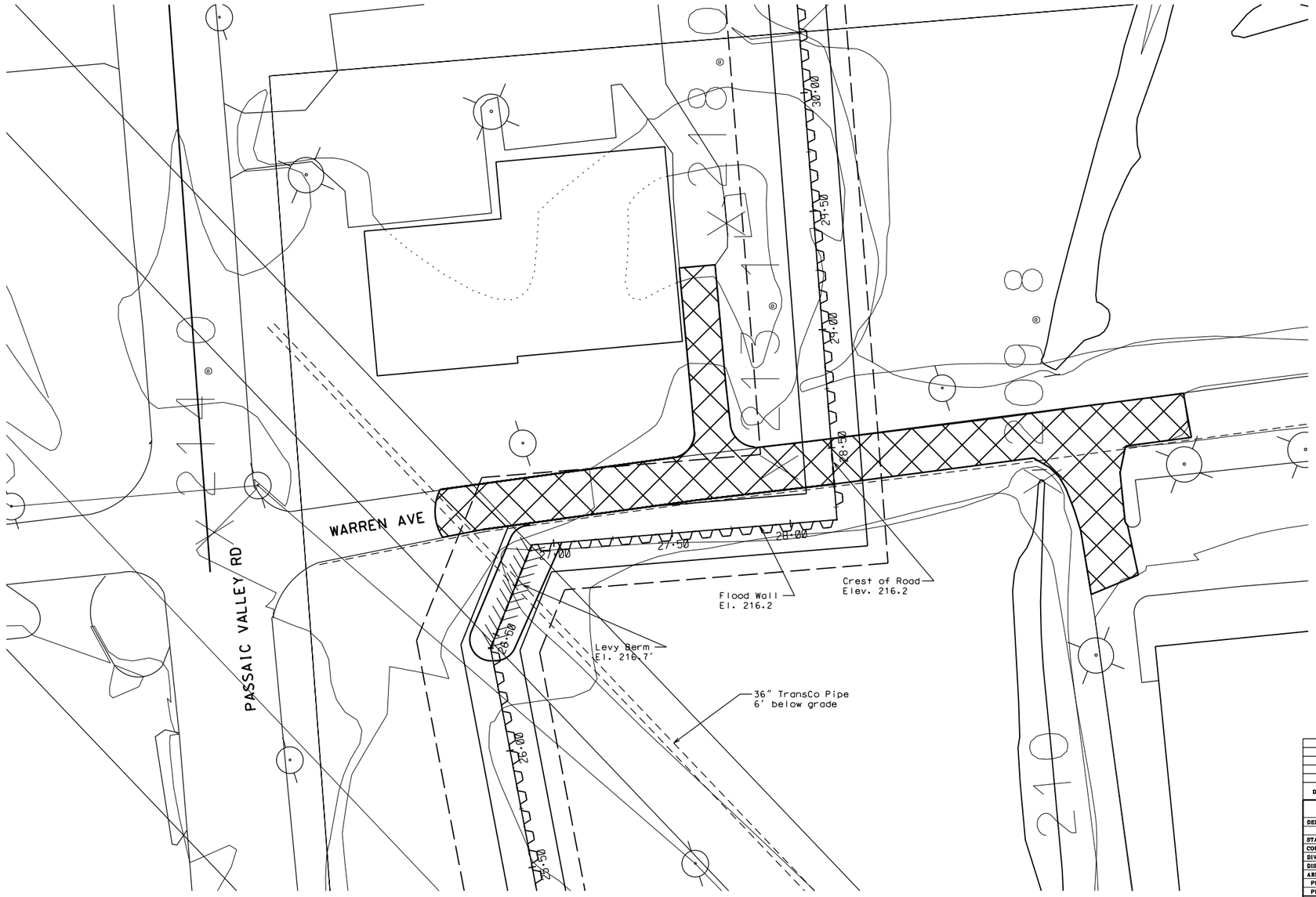

DATE	REVISIONS (READ UP)	BY

DEPARTMENT OF THE ARMY	USING SERVICE
LOCATION OF PROJECT	TRANSPORTATION FACILITIES
STATE NEW JERSEY	RAILROADS
COUNTY MORRIS	STATE ROADS
DIVISION NORTH ATLANTIC	FEDERAL ROADS
DISTRICT BALTIMORE	AIRLINES
ARMY AREA	
PROJECT SITE LOCATED APPROXIMATELY MILES S OF SOMERSET AIRPORT	
PROJECT SITE LOCATED APPROXIMATELY MILES E OF MILLINGTON	

WARREN AVENUE RAISING

DEPARTMENT OF THE ARMY
U. S. ARMY ENGINEER DISTRICT, BALTIMORE
CORPS OF ENGINEERS
NORTH ATLANTIC DIVISION

DRAWN BY:
TRACED BY:
CHECKED BY:
SUBMITTED BY:
CADASTRAL
RECOMMENDED BY:
CHIEF, P&C BRANCH

UPPER PASSAIC RIVER AND TRIBUTARIES
NEW JERSEY FLOOD PROTECTION AND ENVIRONMENTAL RESTORATION FEASIBILITY STUDY
LONG HILL TOWNSHIP, MORRIS COUNTY, NJ

APPROVED BY: DATE
CHIEF, REAL ESTATE DIVISION

US ARMY CORPS OF ENGINEERS, WASH DC 20314

INSTALLATION OR PROJECT NO.

SHEET ___ OF ___ DRAWING NO. 7

FILE NAME:

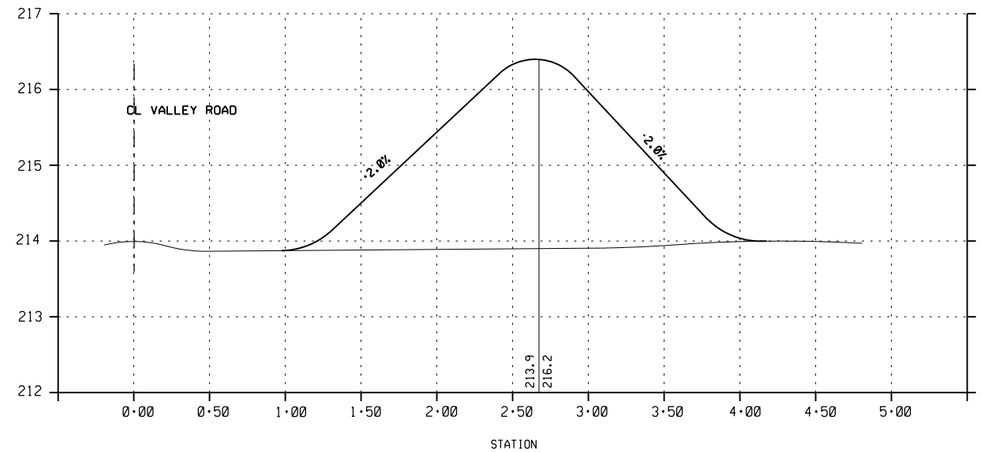

PROPOSED WARREN AVENUE PROFILE
SCALE
HORIZONTAL: 1" = 50'
VERTICAL: 1" = 2'

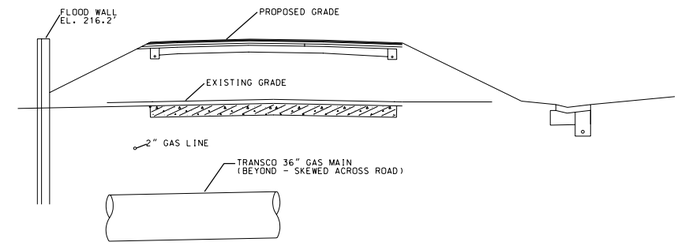

PROPOSED WARREN AVENUE SECTION

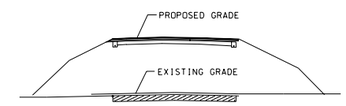

PROPOSED MAIN AVENUE SECTION

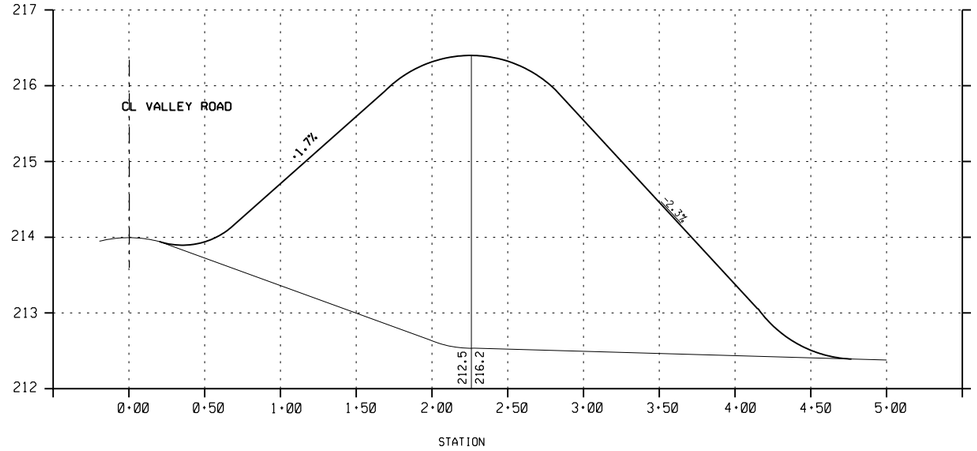

PROPOSED MAIN AVENUE PROFILE
SCALE
HORIZONTAL: 1" = 50'
VERTICAL: 1" = 2'

DATE	REVISIONS (READ UP)	BY

DEPARTMENT OF THE ARMY	USING SERVICE
LOCATION OF PROJECT	TRANSPORTATION FACILITIES
STATE NEW JERSEY	RAILROADS
COUNTY MORRIS	STATE ROADS
DIVISION NORTH ATLANTIC	FEDERAL ROADS
DISTRICT BALTIMORE	AIRLINES
ARMY AREA	
PROJECT SITE LOCATED APPROXIMATELY MILES S OF SOMERSET AIRPORT	
PROJECT SITE LOCATED APPROXIMATELY MILES E OF MILLINGTON	

ROAD CROSSING PROFILES

DEPARTMENT OF THE ARMY
U. S. ARMY ENGINEER DISTRICT, BALTIMORE
CORPS OF ENGINEERS
NORTH ATLANTIC DIVISION

DRAWN BY:
TRACED BY:
CHECKED BY:
SUBMITTED BY:
CADASTRAL
RECOMMENDED BY:
CHIEF, P&C BRANCH

UPPER PASSAIC RIVER AND TRIBUTARIES
NEW JERSEY FLOOD PROTECTION AND ENVIRONMENTAL RESTORATION FEASIBILITY STUDY
LONG HILL TOWNSHIP, MORRIS COUNTY, NJ

APPROVED BY:
DATE
CHIEF, REAL ESTATE DIVISION

US ARMY CORPS OF ENGINEERS, WASH DC 20314

INSTALLATION OR PROJECT NO.
SHEET OF
DRAWING NO. 8

FILE NAME:

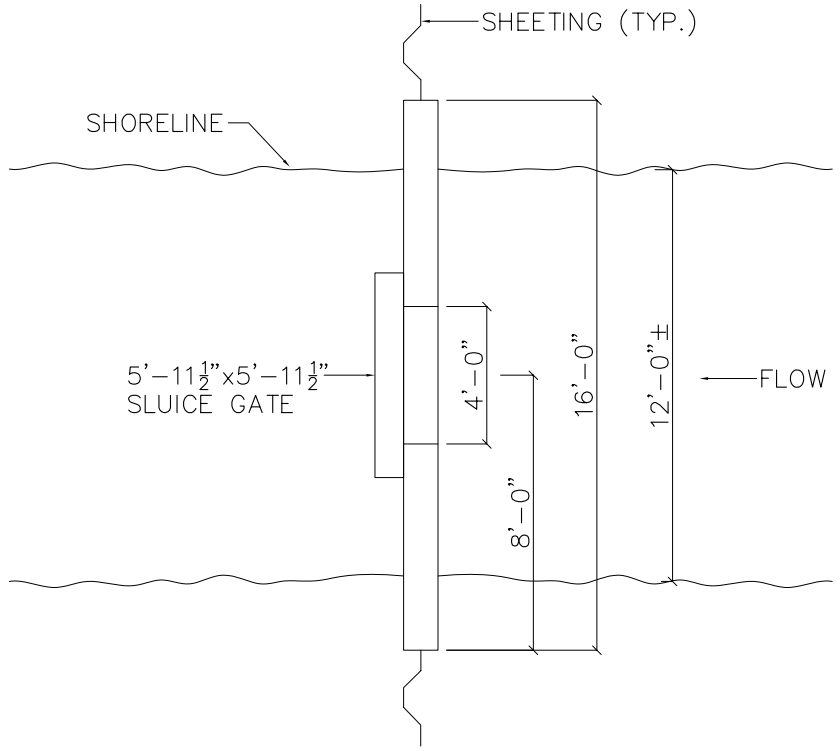

PLAN

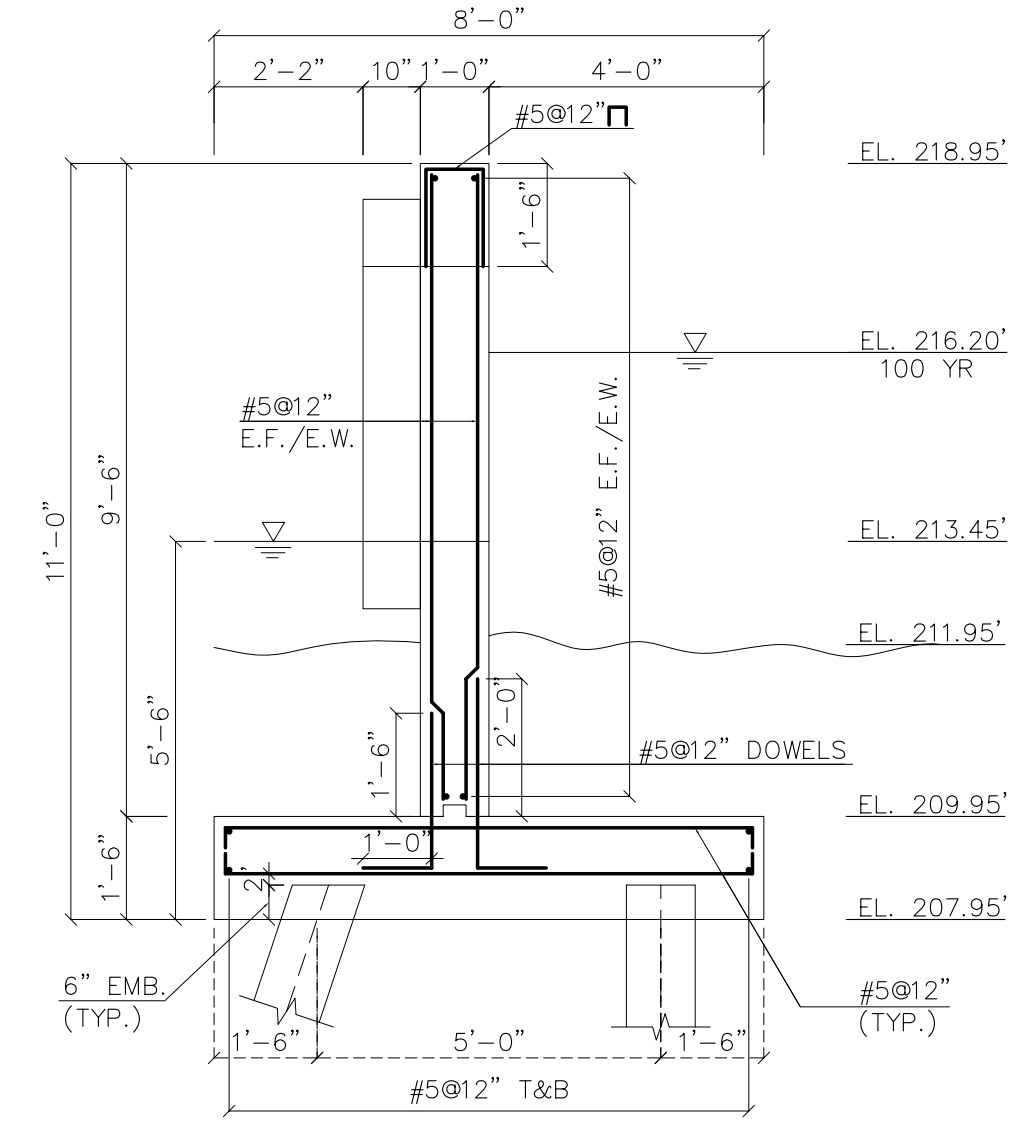

SECTION

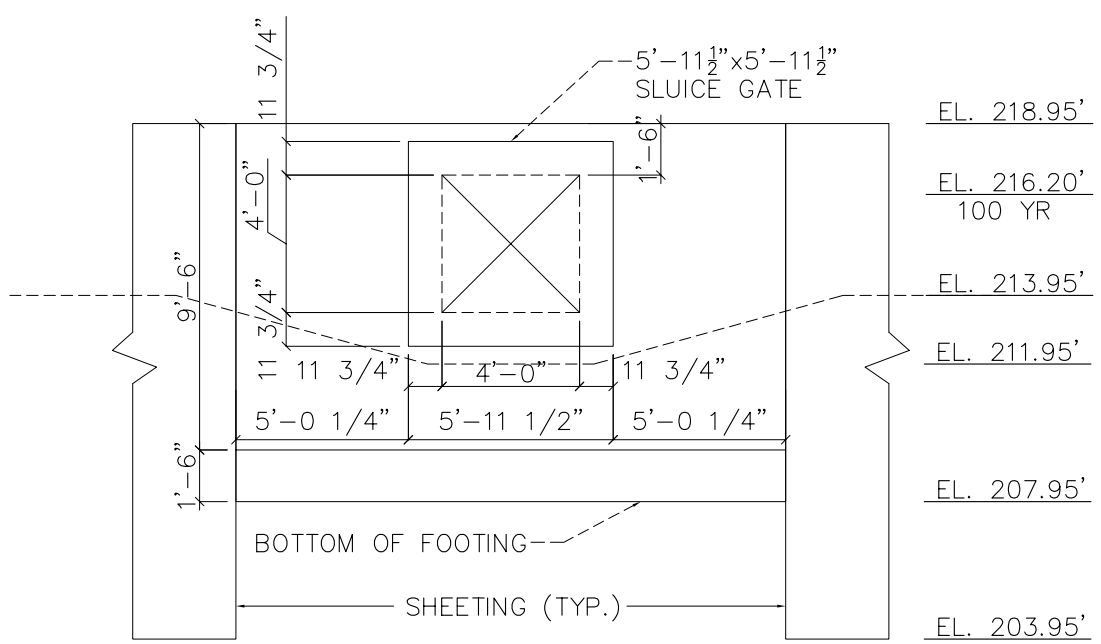

ELEVATION

DATE	REVISIONS (READ UP)	BY

DEPARTMENT OF THE ARMY	USING SERVICE
LOCATION OF PROJECT	TRANSPORTATION FACILITIES
STATE NEW JERSEY	RAILROADS
COUNTY MORRIS	STATE ROADS
DIVISION NORTH ATLANTIC	FEDERAL ROADS/S
DISTRICT BALTIMORE	AIRLINES
ARMY AREA	
PROJECT SITE LOCATED APPROXIMATELY MILES S OF SOMERSET AIRPORT	
PROJECT SITE LOCATED APPROXIMATELY MILES E OF MILLINGTON	

SLUICE GATE NEAR BORING NO. 1

DEPARTMENT OF THE ARMY
U. S. ARMY ENGINEER DISTRICT, BALTIMORE
CORPS OF ENGINEERS
NORTH ATLANTIC DIVISION

DRAWN BY:
TRACED BY:
CHECKED BY:
SUBMITTED BY:
CADASTRAL
RECOMMENDED BY:

UPPER PASSAIC RIVER AND TRIBUTARIES
NEW JERSEY FLOOD PROTECTION AND
ENVIRONMENTAL RESTORATION
FEASIBILITY STUDY
LONG HILL TOWNSHIP, MORRIS COUNTY, NJ

APPROVED BY:
DATE

CHIEF, P&C BRANCH CHIEF, REAL ESTATE DIVISION

US ARMY CORPS OF ENGINEERS, WASH DC 20314

INSTALLATION OR PROJECT NO. SHEET OF DRAWING NO.

FILE NAME:

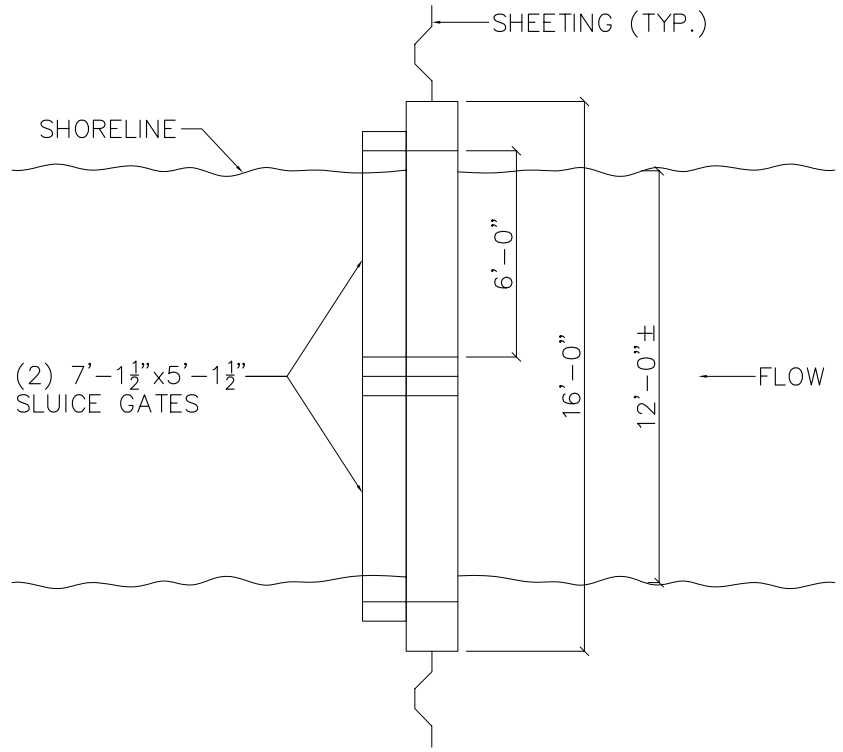

PLAN

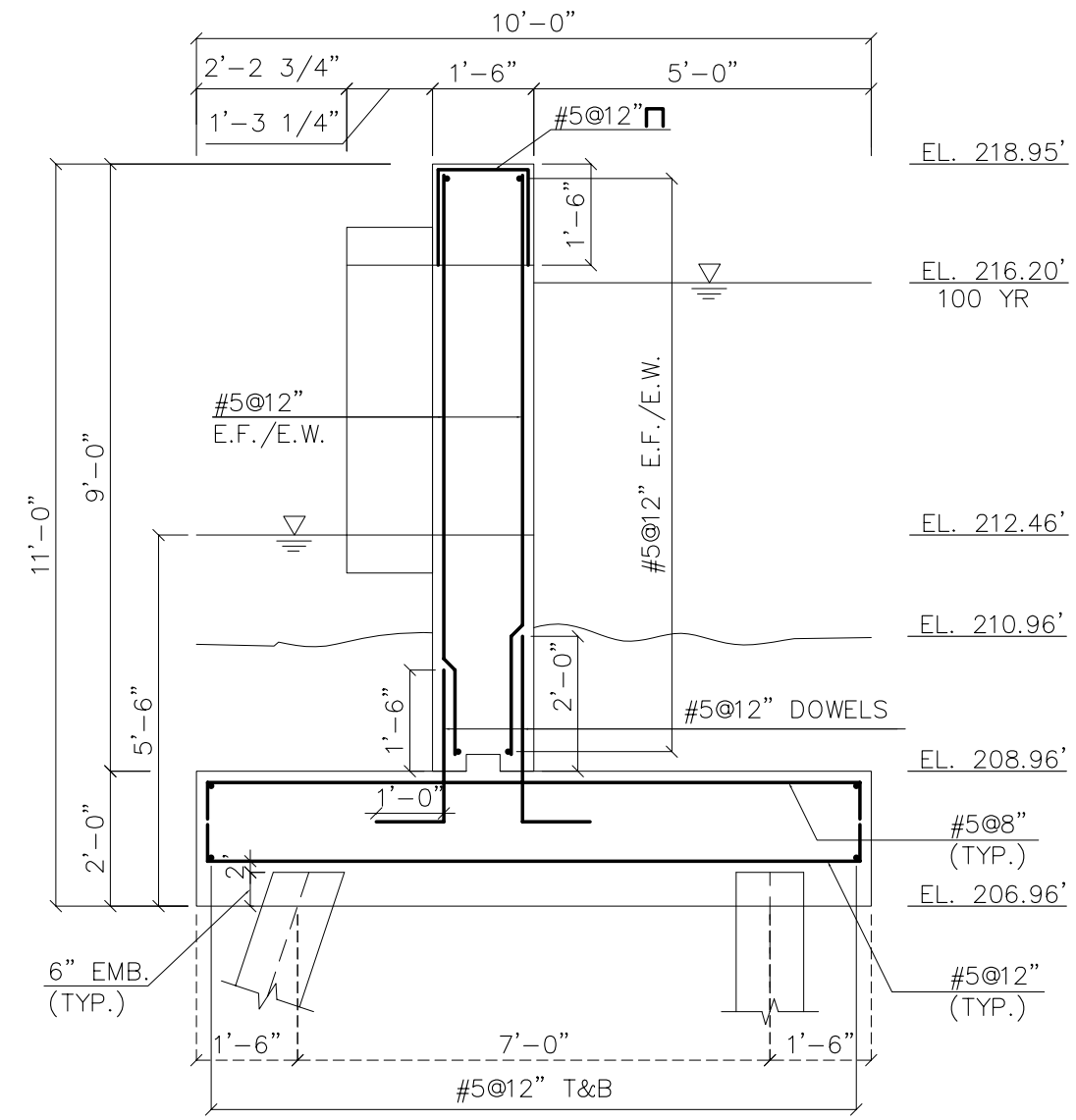

SECTION

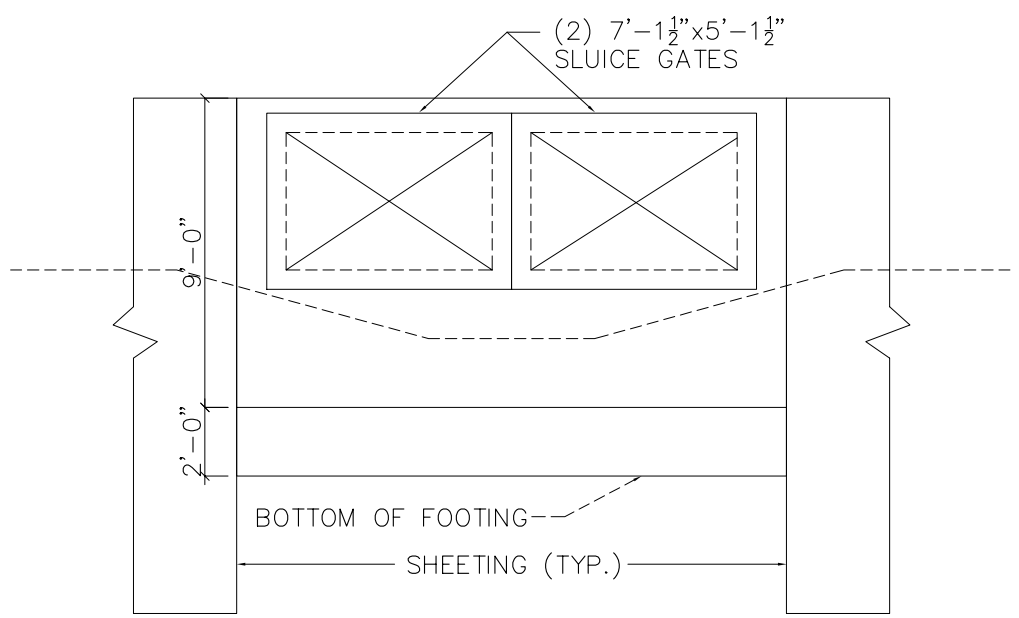

ELEVATION

DATE	REVISIONS (READ UP)	BY

DEPARTMENT OF THE ARMY	USING SERVICE
LOCATION OF PROJECT	TRANSPORTATION FACILITIES
STATE NEW JERSEY	RAILROADS
COUNTY MORRIS	STATE ROADS
DIVISION NORTH ATLANTIC	FEDERAL ROADS#
DISTRICT BALTIMORE	AIRLINES
ARMY AREA	
PROJECT SITE LOCATED APPROXIMATELY MILES S OF SOMERSET AIRPORT	
PROJECT SITE LOCATED APPROXIMATELY MILES E OF MILLINGTON	

SLUICE GATE NEAR BORING NO. 6

DEPARTMENT OF THE ARMY
U. S. ARMY ENGINEER DISTRICT, BALTIMORE
CORPS OF ENGINEERS
NORTH ATLANTIC DIVISION

DRAWN BY:
TRACED BY:
CHECKED BY:
SUBMITTED BY:
CADASTRAL
RECOMMENDED BY:

UPPER PASSAIC RIVER AND TRIBUTARIES
NEW JERSEY FLOOD PROTECTION AND
ENVIRONMENTAL RESTORATION
FEASIBILITY STUDY
LONG HILL TOWNSHIP, MORRIS COUNTY, NJ

APPROVED BY:
DATE:

CHIEF, P&C BRANCH CHIEF, REAL ESTATE DIVISION

US ARMY CORPS OF ENGINEERS, WASH DC 20314

INSTALLATION OR PROJECT NO.
SHEET OF
DRAWING NO.

FILE NAME:

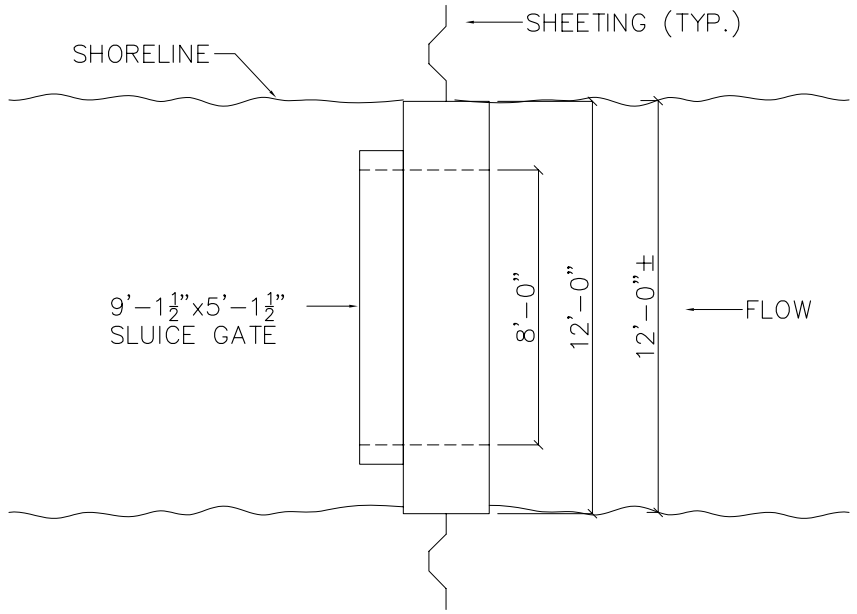

PLAN

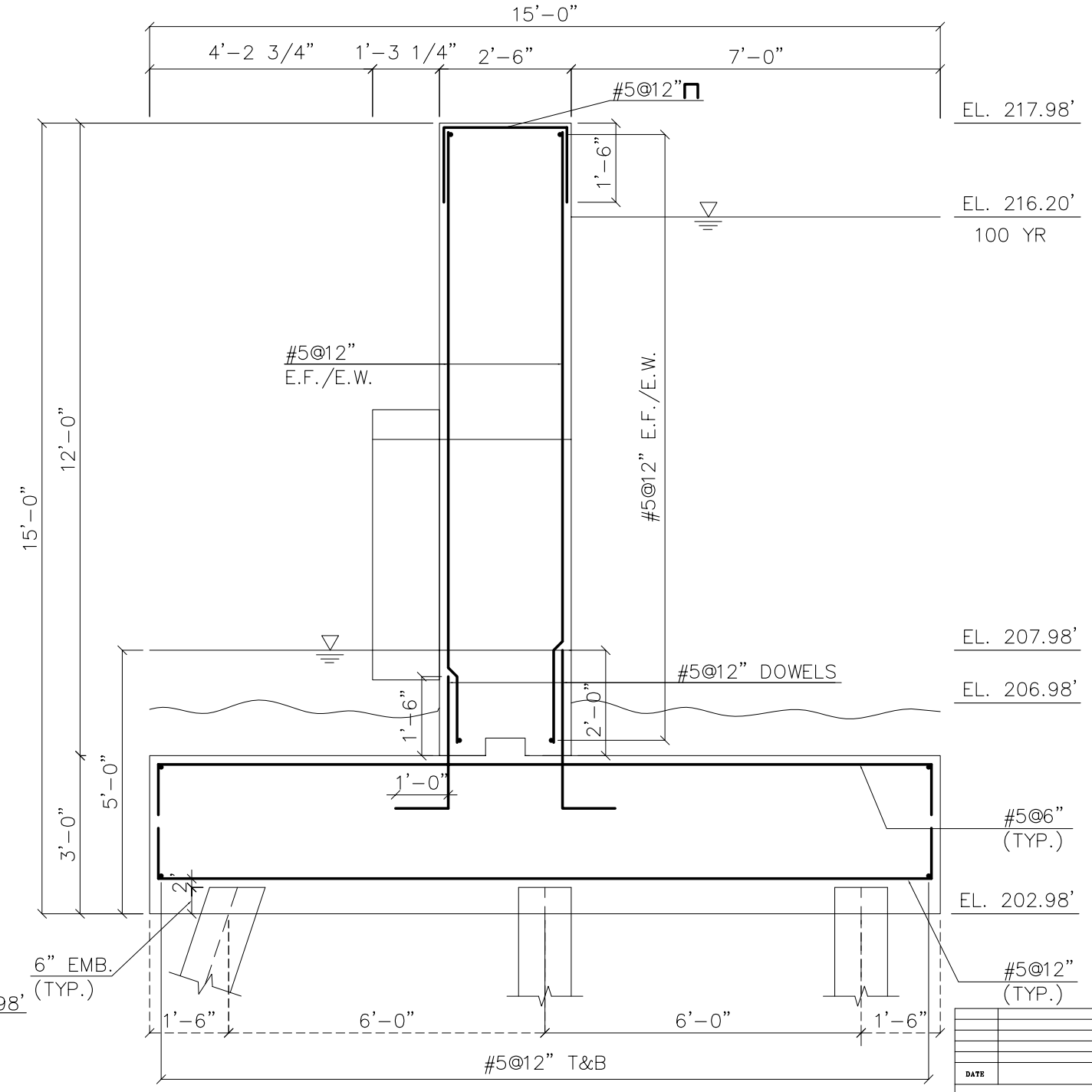

SECTION

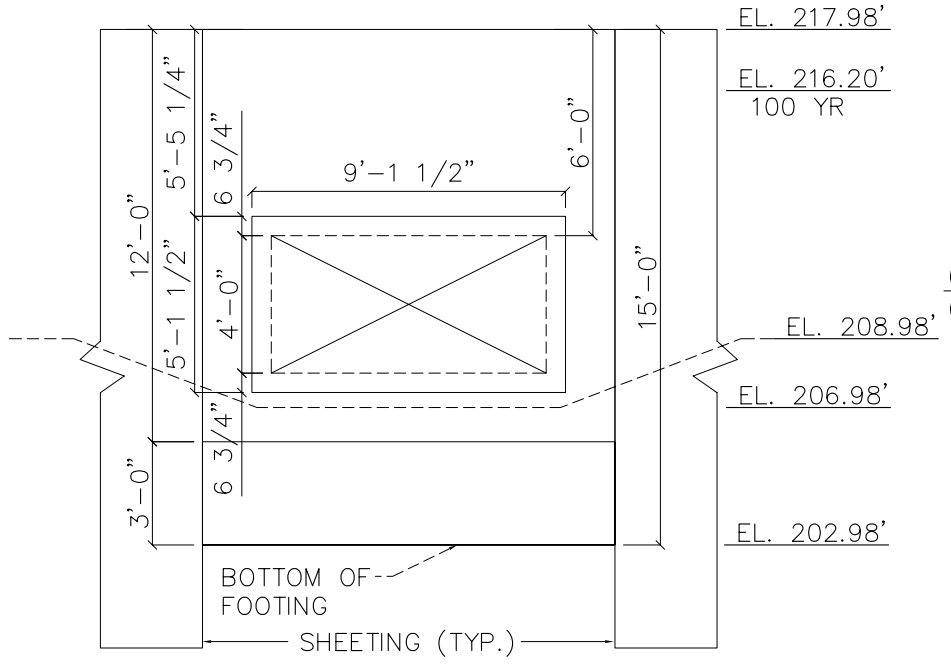

ELEVATION

DATE	REVISIONS (READ UP)	BY

DEPARTMENT OF THE ARMY	USING SERVICE
LOCATION OF PROJECT	TRANSPORTATION FACILITIES
STATE NEW JERSEY	RAILROADS
COUNTY MORRIS	STATE ROADS
DIVISION NORTH ATLANTIC	FEDERAL ROADS#S
DISTRICT BALTIMORE	AIRLINES
ARMY AREA%	
PROJECT SITE LOCATED APPROXIMATEL%ı MILES S OF SOMERSET AIRPORT	
PROJECT SITE LOCATED APPROXIMATEL%ı MILES E OF MILLINGTON	

SLUICE GATE NEAR BORING NO. 8

DEPARTMENT OF THE ARMY
U. S. ARMY ENGINEER DISTRICT, BALTIMORE
CORPS OF ENGINEERS
NORTH ATLANTIC DIVISION

DRAWN BY:
TRACED BY:
CHECKED BY:
SUBMITTED BY:
CADASTRAL
RECOMMENDED BY:

UPPER PASSAIC RIVER AND TRIBUTARIES
NEW JERSEY FLOOD PROTECTION AND
ENVIRONMENTAL RESTORATION
FEASIBILITY STUDY
LONG HILL TOWNSHIP, MORRIS COUNTY, NJ

APPROVED BY:
DATE

CHIEF, P&C BRANCH CHIEF, REAL ESTATE DIVISION
US ARMY CORPS OF ENGINEERS, WASH DC 20314

INSTALLATION OR PROJECT NO. SHEET OF DRAWING NO.

FILE NAME:

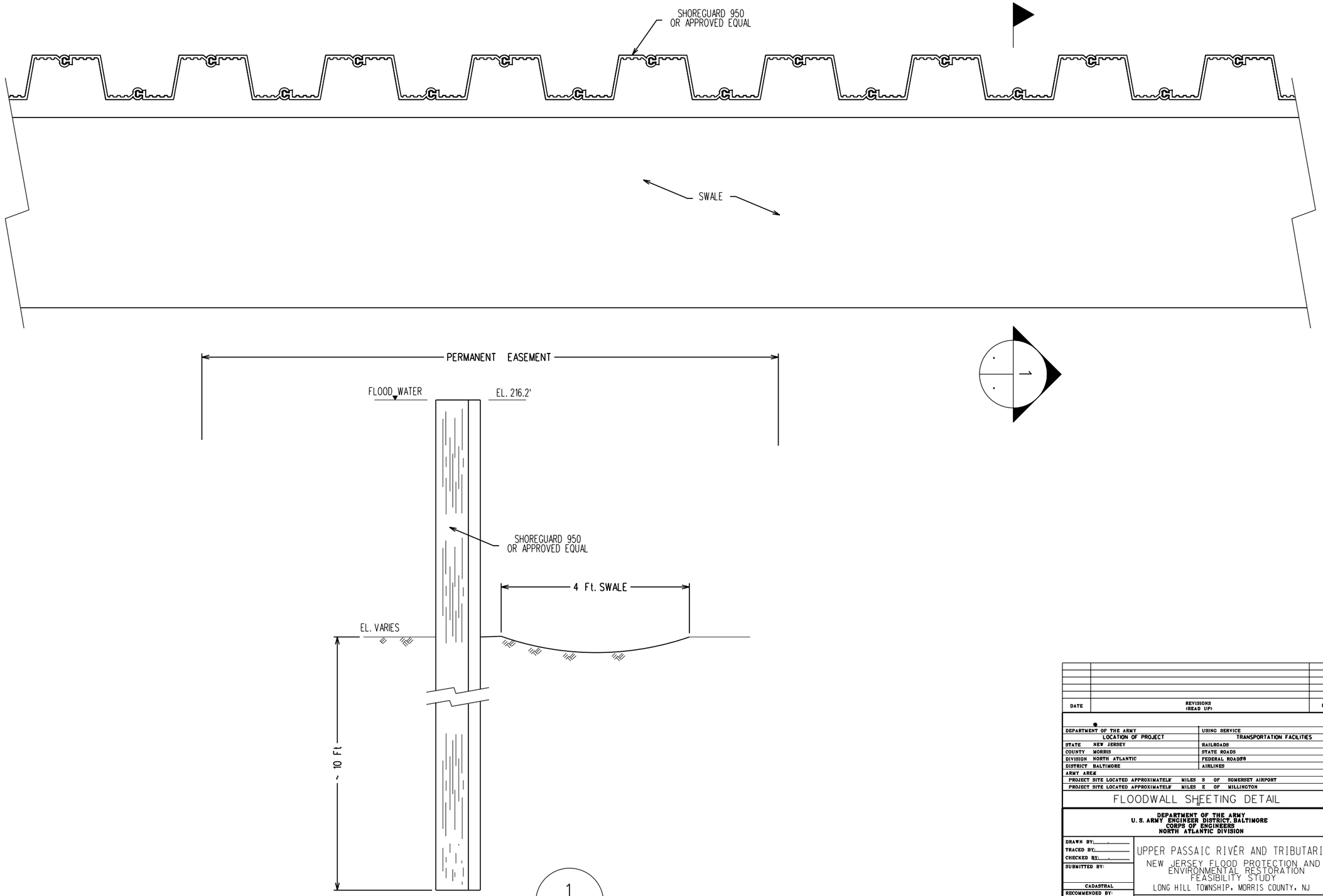

DATE	REVISIONS (READ UP)	BY

DEPARTMENT OF THE ARMY

LOCATION OF PROJECT		USING SERVICE
		TRANSPORTATION FACILITIES
STATE	NEW JERSEY	RAILROADS
COUNTY	MORRIS	STATE ROADS
DIVISION	NORTH ATLANTIC	FEDERAL ROADS
DISTRICT	BALTIMORE	AIRLINES
ARMY AREA		
PROJECT SITE LOCATED APPROXIMATELY	MILES S OF	SOMERSET AIRPORT
PROJECT SITE LOCATED APPROXIMATELY	MILES E OF	MILLINGTON

FLOODWALL SHEETING DETAIL

DEPARTMENT OF THE ARMY
U. S. ARMY ENGINEER DISTRICT, BALTIMORE
CORPS OF ENGINEERS
NORTH ATLANTIC DIVISION

DRAWN BY:
TRACED BY:
CHECKED BY:
SUBMITTED BY:
CADASTRAL
RECOMMENDED BY:
CHIEF, P&C BRANCH

UPPER PASSAIC RIVER AND TRIBUTARIES
NEW JERSEY FLOOD PROTECTION AND ENVIRONMENTAL RESTORATION FEASIBILITY STUDY
LONG HILL TOWNSHIP, MORRIS COUNTY, NJ

APPROVED BY:
DATE
CHIEF, REAL ESTATE DIVISION

US ARMY CORPS OF ENGINEERS, WASH DC 20314

INSTALLATION OR PROJECT NO.
SHEET ___ OF ___
DRAWING NO. 12

FILE NAME:

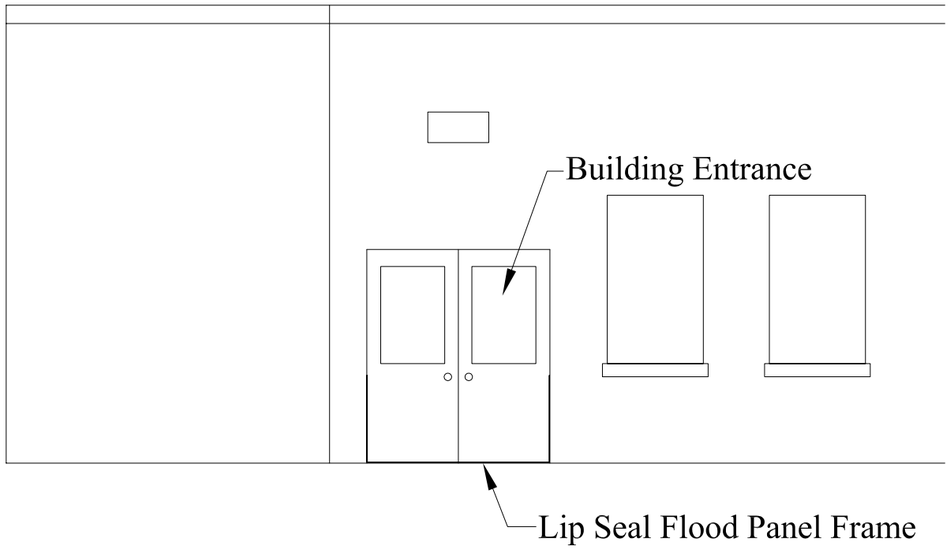

Entrance w/o Panel

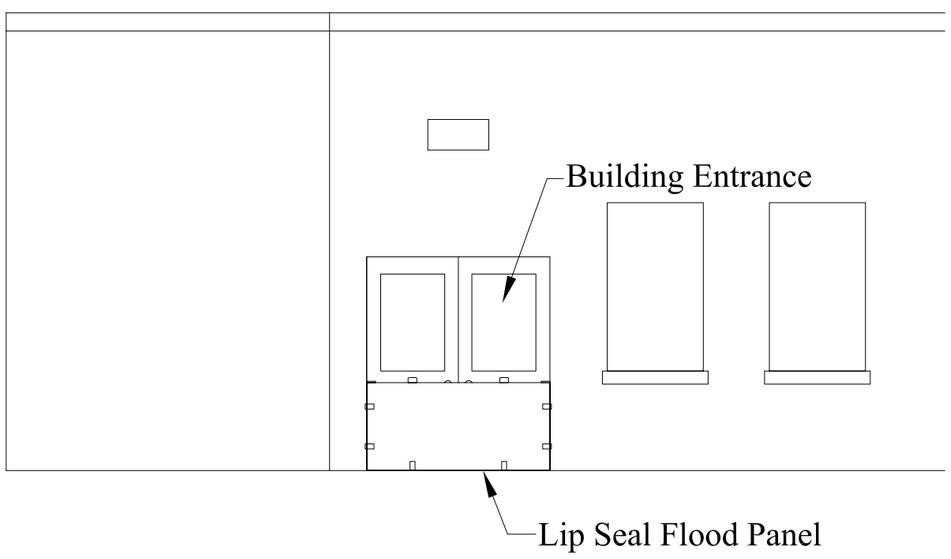

Entrance w/ Panel

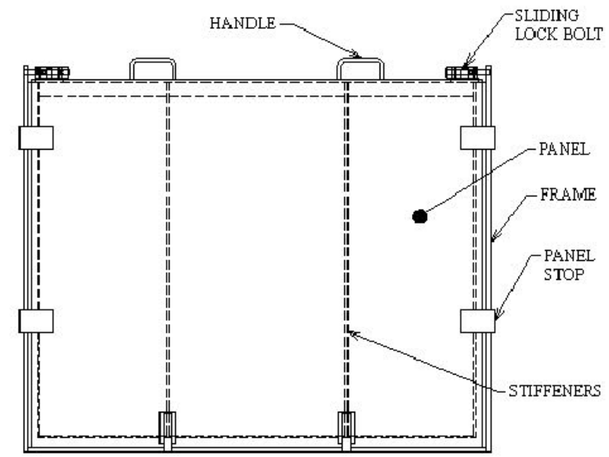

LIP-SEAL FLOOD PANEL

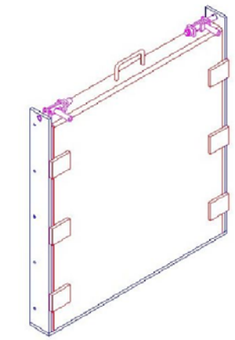

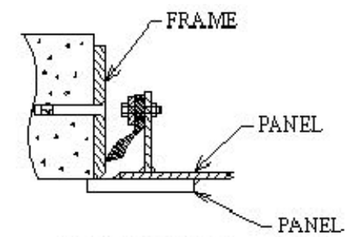

SEALED JAMB
BOLTED FRAME

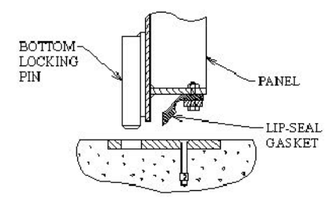

UNSEALED SILL

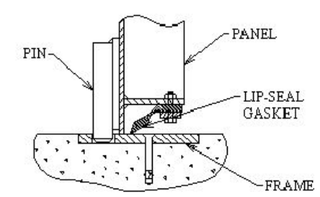

SEALED SILL

DATE	REVISIONS (READ UP)	BY

DEPARTMENT OF THE ARMY	USING SERVICE
LOCATION OF PROJECT	TRANSPORTATION FACILITIES
STATE NEW JERSEY	RAILROADS
COUNTY MORRIS	STATE ROADS
DIVISION NORTH ATLANTIC	FEDERAL ROADS/S
DISTRICT BALTIMORE	AIRLINES
ARMY AREA/	
PROJECT SITE LOCATED APPROXIMATEL/N MILES S OF SOMERSET AIRPORT	
PROJECT SITE LOCATED APPROXIMATEL/N MILES E OF MILLINGTON	

LIP SEAL FLOOD PANEL DETAILS

DEPARTMENT OF THE ARMY
U. S. ARMY ENGINEER DISTRICT, BALTIMORE
CORPS OF ENGINEERS
NORTH ATLANTIC DIVISION

DRAWN BY:
TRACED BY:
CHECKED BY:
SUBMITTED BY:
CADASTRAL
RECOMMENDED BY:
CHIEF, P&C BRANCH

UPPER PASSAIC RIVER AND TRIBUTARIES
NEW JERSEY FLOOD PROTECTION AND
ENVIRONMENTAL RESTORATION
FEASIBILITY STUDY
LONG HILL TOWNSHIP, MORRIS COUNTY, NJ

APPROVED BY:
DATE
CHIEF, REAL ESTATE DIVISION

US ARMY CORPS OF ENGINEERS, WASH DC 20314

INSTALLATION OR PROJECT NO.
SHEET OF
DRAWING NO.

FILE NAME: