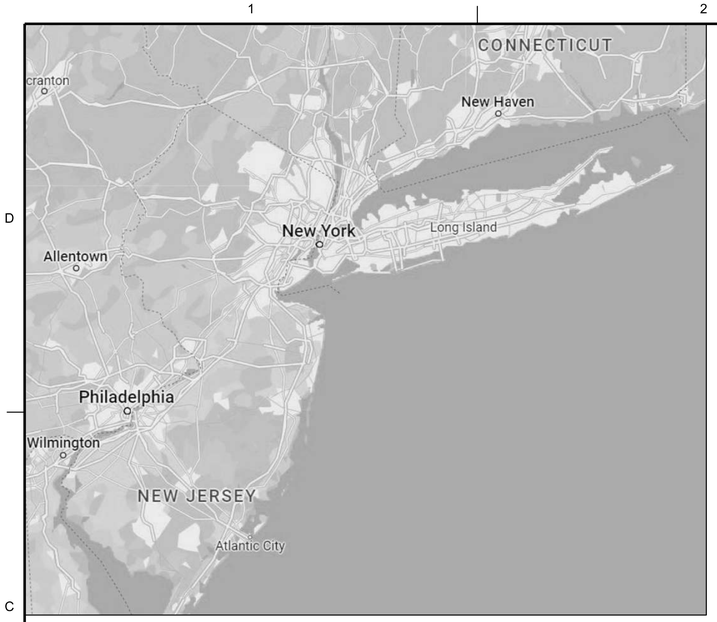

VICINITY MAP

NTS

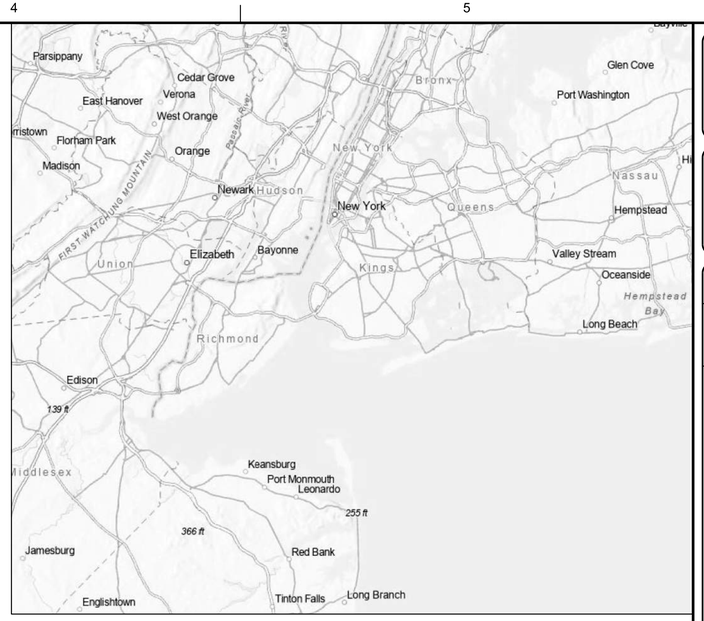

LOCATION PLAN

NTS

NEW YORK - NEW JERSEY HARBOR AND TRIBUTARIES
COASTAL STORM RISK MANAGEMENT
FEASIBILITY STUDY

TENTATIVELY SELECTED PLAN

PRELIMINARY
NOT FOR CONSTRUCTION

US Army Corps of Engineers®

MARK	DESCRIPTION	DATE	APPR.
B	DRAFT for Public Review - NYNJHAT Study TSP Plan Set	09.23.22	MK
A	DRAFT for DOC-NYNJHAT Study - TSP Plan Set	08.26.22	MK

U.S. ARMY CORPS OF ENGINEERS
U.S. ARMY ENGINEER DISTRICT
NEW YORK
http://www.nan.usace.army.mil
MOFFATT & NICHOL
529 FIFTH AVE., 14TH FLOOR
NEW YORK, NY 10017
212-768-7454

DESIGNED BY: IK | DATE: 09.08.22
DWN BY: AA | CKD BY: MK | SOLICITATION NO.:
SUBMITTED BY: SA | CONTRACT NO.: 220032-01
PLOT SCALE: AS SHOWN | PLOT DATE: 09/09/22 | FILE NUMBER:
SIZE: ANSI D | FILE NAME: 220032-G-001.dgn

NEW YORK - NEW JERSEY HARBOR AND TRIBUTARIES COASTAL STORM RISK TENTATIVELY SELECTED PLAN

COVER SHEET

SHEET ID
G-001
SHEET 1 OF 88

PATH: Q:\BA\220032-01\20 CADD_Active_SheetSet\220032-G-001.dgn
FILE: 220032-G-001.dgn
9/9/2022
11:13:35 AM
LAST PLOTTED BY: tocooper

INDEX OF DRAWINGS

INDEX NO.	SHEET NO.	SHEET TITLE
		GENERAL
1	G-001	COVER SHEET
2	G-002	INDEX OF DRAWINGS
3	G-003	GENERAL NOTES, LEGENDS, AND ABBREVIATIONS
4	G-101	SBM - SHEET KEY PLAN
5	G-102	RRF - SHEET KEY PLAN
		SITE PLANS
6	CS-101	SBM - SITE PLAN (1 OF 27)
7	CS-102	SBM - SITE PLAN (2 OF 27)
8	CS-103	SBM - SITE PLAN (3 OF 27)
9	CS-104	SBM - SITE PLAN (4 OF 27)
10	CS-105	SBM - SITE PLAN (5 OF 27)
11	CS-106	SBM - SITE PLAN (6 OF 27)
12	CS-107	SBM - SITE PLAN (7 OF 27)
13	CS-108	SBM - SITE PLAN (8 OF 27)
14	CS-109	SBM - SITE PLAN (9 OF 27)
15	CS-110	SBM - SITE PLAN (10 OF 27)
16	CS-111	SBM - SITE PLAN (11 OF 27)
17	CS-112	SBM - SITE PLAN (12 OF 27)
18	CS-113	SBM - SITE PLAN (13 OF 27)
19	CS-114	SBM - SITE PLAN (14 OF 27)
20	CS-115	SBM - SITE PLAN (15 OF 27)
21	CS-116	SBM - SITE PLAN (16 OF 27)
22	CS-117	SBM - SITE PLAN (17 OF 27)
23	CS-118	SBM - SITE PLAN (18 OF 27)
24	CS-119	SBM - SITE PLAN (19 OF 27)
25	CS-120	SBM - SITE PLAN (20 OF 27)
26	CS-121	SBM - SITE PLAN (21 OF 27)
27	CS-122	SBM - SITE PLAN (22 OF 27)
28	CS-123	SBM - SITE PLAN (23 OF 27)
29	CS-124	SBM - SITE PLAN (24 OF 27)
30	CS-125	SBM - SITE PLAN (25 OF 27)
31	CS-126	SBM - SITE PLAN (26 OF 27)
32	CS-127	SBM - SITE PLAN (27 OF 27)
33	CS-150	RRF - SITE PLAN (1 OF 15)
34	CS-151	RRF - SITE PLAN (2 OF 15)
35	CS-152	RRF - SITE PLAN (3 OF 15)
36	CS-153	RRF - SITE PLAN (4 OF 15)
37	CS-154	RRF - SITE PLAN (5 OF 15)
38	CS-155	RRF - SITE PLAN (6 OF 15)
39	CS-156	RRF - SITE PLAN (7 OF 15)
40	CS-157	RRF - SITE PLAN (8 OF 15)
41	CS-158	RRF - SITE PLAN (9 OF 15)
42	CS-159	RRF - SITE PLAN (10 OF 15)
43	CS-160	RRF - SITE PLAN (11 OF 15)
44	CS-161	RRF - SITE PLAN (12 OF 15)
45	CS-162	RRF - SITE PLAN (13 OF 15)
46	CS-163	RRF - SITE PLAN (14 OF 15)
47	CS-164	RRF - SITE PLAN (15 OF 15)
		SHORE BASED MEASURES SECTIONS AND PLANS
48	CS-401	SBM - FLOODWALL SECTIONS
49	CS-402	SBM - LEVEE SECTIONS
50	CS-403	SBM - COMPOSITE SEAWALL WITH BEACH AND DUNE SECTIONS
51	CS-404	SBM - TIDE GATE PLAN AND SECTIONS
52	CS-405	SBM - SWING GATE PLAN AND SECTIONS
53	CS-406	SBM - ROAD RAMP SECTIONS
54	CS-407	SBM - PROMENADE, SEAWALL, AND FLIP UP BARRIER SECTIONS
		RESIDUAL RISK FEATURES SECTIONS AND PLANS
55	CS-501	RRF - FLOODWALL AND BULKHEAD TYPICAL SECTIONS
56	CS-502	RRF - BERM AND REVETMENT WITH FLOODWALL TYPICAL SECTIONS
57	CS-503	RRF - TIDE GATE PLAN AND SECTIONS
58	CS-504	RRF - SWING GATE PLAN AND SECTION
59	CS-505	RRF - ROAD RAMP SECTIONS
60	CS-506	RRF - ROAD RAISING SECTION

INDEX OF DRAWINGS

INDEX NO.	SHEET NO.	SHEET TITLE
		JAMAICA BAY STORM SURGE BARRIER
61	CS-601	JAMAICA BAY PLAN SECTOR GATES PHASE I
62	CS-602	JAMAICA BAY PLAN SECTOR GATES PHASE II
63	CS-603	JAMAICA BAY PLAN SECTOR GATES FULL BUILD OUT
64	CS-604	JAMAICA BAY PLAN SECTOR GATES FLOOD EVENT OR TESTING
65	CS-605	JAMAICA BAY - PIER ELEVATION
66	CS-606	JAMAICA BAY - SILL AND TREMIE
67	CS-607	JAMAICA BAY - SCOUR STONE AT SILL
68	CS-608	JAMAICA BAY PLAN SECTOR GATE PARTIAL PLAN AND ELEVATION
69	CS-609	JAMAICA BAY - SCOUR PROTECTION DETAILS
70	CS-610	JAMAICA BAY - GATE PLAN AND PROFILE
71	CS-611	JAMAICA BAY - PIER TOWER DETAILS
72	CS-612	JAMAICA BAY - GATE DETAIL
73	CS-613	JAMAICA BAY - PIER TOWER DETAILS
74	CS-614	JAMAICA BAY - ELEVATIONS SCHEDULES
75	CS-615	JAMAICA BAY PHOTO REFERENCE SECTOR GATE
		STORM SURGE BARRIERS
76	CS-701	ARTHUR KILL SSB ELEVATION
77	CS-702	ARTHUR KILL RENDERING
78	CS-703	KILL VAN KULL SSB ELEVATION
79	CS-704	KILL VAN KULL RENDERING
80	CS-705	NEWTON CREEK SSB ELEVATION
81	CS-706	GOWANUS CANAL SSB ELEVATION
82	CS-707	FLUSHING CREEK SSB ELEVATION
83	CS-708	SHEEPSHEAD BAY SSB ELEVATION
84	CS-709	GERRITSEN CREEK SSB ELEVATION
		RESIDUAL RISK FEATURES - NAVIGATIONAL GATES
85	CS-801	HACKENSACK RIVER RRF NAVIGABLE GATE ELEVATION
86	CS-802	HEAD OF BAY GATE RRF NAVIGABLE GATE ELEVATION
87	CS-803	OLD HOWARD BEACH EAST GATE RRF NAVIGABLE GATE ELEVATION
88	CS-804	OLD HOWARD BEACH WEST GATE RRF NAVIGABLE GATE ELEVATION

PRELIMINARY
NOT FOR CONSTRUCTION

US Army Corps of Engineers®

MARK	DESCRIPTION	DATE	APPR.
B	DRAFT for Public Review - NYNJHAT Study TSP Plan Set	09.23.22	MK
A	DRAFT for DOC-NYNJHAT Study - TSP Plan Set	08.26.22	MK

U.S. ARMY CORPS OF ENGINEERS
U.S. ARMY ENGINEER DISTRICT
NEW YORK
http://www.nan.usace.army.mil
MOFFATT & NICHOL
529 FIFTH AVE., 14TH FLOOR
NEW YORK, NY 10017
212-768-7454

DESIGNED BY: IK | DATE: 09.09.22
DWN BY: AA | CKD BY: MK | SOLICITATION NO.:
SUBMITTED BY: SA | CONTRACT NO.: 220032-01
PLOT SCALE: AS SHOWN | PLOT DATE: 9/9/2022 | FILE NUMBER:
PLOT SIZE: ANSI D | FILE NAME: 220032-G-002.dgn

NEW YORK - NEW JERSEY HARBOR AND TRIBUTARIES COASTAL STORM RISK TENTATIVELY SELECTED PLAN

INDEX OF DRAWINGS

SHEET ID
G-002
SHEET 2 OF 88

PATH: Q:\BA\220032-01\20 CADD_Active_SheetSet\220032-G-002.dgn
FILE: 220032-G-002.dgn 9/9/2022 11:13:36 AM
LAST PLOTTED BY: tocooper

GENERAL NOTES

1. THE DATA DISPLAYED ON THE SITE PLANS IN THESE DRAWINGS MAY NOT BE REPRESENTATIVE OF THE EXACT LOCATION OF THE PROPOSED FLOOD RISK REDUCTION ALIGNMENT. THE ALIGNMENTS SHOWN ARE MEANT TO PROVIDE AN INDICATION OF THE PROPOSED PLACEMENT OF THE MEASURE, BUT SHOULD NOT BE CONSTRUED AS EXACT OR FINAL, NOR IS THE LINE WIDTH REPRESENTATIVE OF THE SCALE OF THE MEASURE. REFINEMENTS TO THE LOCATION OF THE FEATURES WILL BE MADE IN LATER PHASES OF THE STUDY.

ABBREVIATIONS

@	=	AT
℄, C/L	=	CENTERLINE
CTWT	=	COUNTERWEIGHT
DIA	=	DIAMETER
EL	=	ELEVATION
EW	=	EACH WAY
FCM	=	FRACTURE CRITICAL MEMBERS
GR	=	GRADE
IFF	=	INDUCED FLOODING FEATURE
MHHW	=	MEAN HIGH WATER
MIN	=	MINIMUM
MSL	=	MEAN SEA LEVEL
NLL	=	NOMINAL LOWER LIMIT
NTS	=	NOT TO SCALE
NUL	=	NOMINAL UPPER LIMIT
NYNJHAT	=	NEW YORK / NEW JERSEY HARBOR AND TRIBUTARIES
RRF	=	RESIDUAL RISK FEATURE
SBM	=	SHORE BASED MEASURE
SSB	=	STORM SURGE BARRIER
TBD	=	TO BE DETERMINED
TSP	=	TENTATIVELY SELECTED PLAN
TYP	=	TYPICAL
VERT	=	VERTICAL

SBM - LEGEND

MEASURE TYPE	DETAIL
LARGE LEVEE	B1 / CS-402
MEDIUM LEVEE	C2 / CS-402
EXTRA LARGE FLOODWALL	C1 / CS-401
FLOODWALL IN PARK	B3 / CS-401
LARGE FLOOD WALL	C4 / CS-401
MEDIUM FLOODWALL	B1 / CS-401
ELEVATED PROMENADE	A1 / CS-407
REINFORCED DUNE - NATURAL DUNE COVER	D1 / CS-403
REINFORCED DUNE - PARTIAL DUNE COVER	B1 / CS-403
SEAWALL	C3 / CS-407
STORM SURGE BARRIER	------
TIDE GATE	CS-404
DEPLOYABLE FLOOD BARRIER - FLIP UP BARRIER	A3 / CS-407
DEPLOYABLE FLOOD BARRIER - PEDESTRIAN GATE	------
DEPLOYABLE FLOOD BARRIER - RAILROAD GATE	------
DEPLOYABLE FLOOD BARRIER - VEHICLE GATE	C1 / CS-405
LARGE LEVEE WITH ROAD RAMP	B1 / CS-405 & CS-406
MEDIUM LEVEE WITH ROAD RAMP	C2 / CS-402 & CS-406
IFF LARGE LEVEE *	B1 / CS-402
CSRM RESIDUAL RISK WITH PROJECT	------
CSRM REDUCED RISK WITH PROJECT	------

* IFF ALIGNMENTS ARE DENOTED WITH YELLOW HIGHLIGHT AROUND SBM LINE SYMBOLOGY

RRF - LEGEND

MEASURE TYPE	DETAIL
HYBRID BERM	A1 / CS-502
HIGH BERM	B1 / CS-502
MEDIUM BERM	D4 / CS-502
LOW BERM	D1 / CS-502
HIGH FLOODWALL	A1 / CS-501
STANDARD FLOODWALL	C3 / CS-501
LOW FLOODWALL	C1 / CS-501
REVETMENT WITH FLOODWALL	A4 / CS-502
DEEP BULKHEAD	CS-501
SHALLOW BULKHEAD	A3 - CS-501
ROAD RAISING	CS-506
NAVIGABLE GATE	------
TIDE GATE	CS-503
DEPLOYABLE FLOOD BARRIER - PEDESTRIAN GATE	------
DEPLOYABLE FLOOD BARRIER - VEHICLE GATE	CS-504
DEPLOYABLE FLOOD BARRIER - FLIP UP BARRIER	------

PRELIMINARY
NOT FOR CONSTRUCTION

US Army Corps of Engineers®

MARK	DESCRIPTION	DATE	APPR.
B	DRAFT for Public Review - NYNJHAT Study TSP Plan Set	09.23.22	MK
A	DRAFT for DQC-NYNJHAT Study - TSP Plan Set	08.26.22	MK

U.S. ARMY CORPS OF ENGINEERS
U.S. ARMY ENGINEER DISTRICT
NEW YORK
http://www.nan.usace.army.mil

MOFFATT & NICHOL
529 FIFTH AVE., 14TH FLOOR
NEW YORK, NY 10017
212-768-7454

DESIGNED BY: IK | DATE: 09.08.22
DWN BY: AA | CKD BY: MK | SOLICITATION NO.:
SUBMITTED BY: SA | CONTRACT NO.: 220032-01
PLOT SCALE: AS SHOWN | PLOT DATE: 9/9/2022 | FILE NUMBER:
SIZE: ANSI D | FILE NAME: 220032-G-003.dgn

NEW YORK - NEW JERSEY HARBOR AND TRIBUTARIES COASTAL STORM RISK
TENTATIVELY SELECTED PLAN

GENERAL NOTES,
LEGENDS AND ABBREVIATIONS

SHEET ID
G-003
SHEET 3 OF 88

PATH: \\mne.net\Projects\BA\220032-01\20 CADD_Active_SheetSet\220032-G-003.dgn
FILE: 220032-G-003.dgn 9/9/2022 11:13:41 AM tocooper
LAST PLOTTED BY:

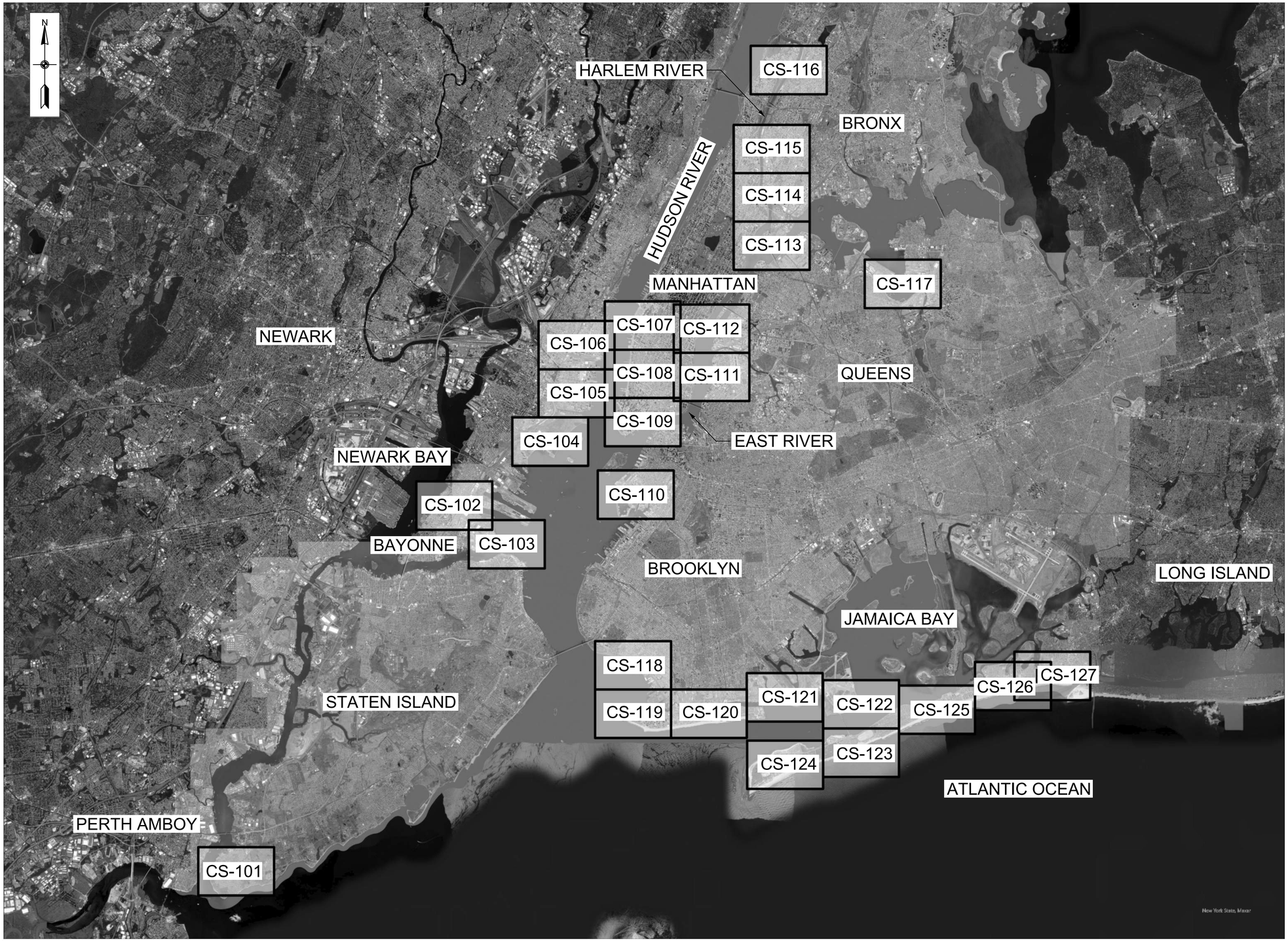

PRELIMINARY
NOT FOR CONSTRUCTION

SBM - KEY MAP

PATH: Q:\BA\220032-01\20 CADD_Active_SheetSet\220032-G-101.dgn

FILE: 220032-G-101.dgn

9/9/2022 11:13:46 AM

LAST PLOTTED BY: tocooper

US Army Corps of Engineers®

MARK	DESCRIPTION	DATE	APPR.
B	DRAFT for Public Review - NYNJHAT Study TSP Plan Set	09.23.22	MK
A	DRAFT for DOC-NYNJHAT Study - TSP Plan Set	08.26.22	MK

DESIGNED BY: MK
DWN BY: AA
CKD BY: MK
SUBMITTED BY: SA
PLOT SCALE: AS SHOWN
PLOT DATE: 09/09/22
DATE: 09.09.22
SOLICITATION NO.:
CONTRACT NO.: 220032-01
FILE NUMBER:
SIZE: ANSI D
FILE NAME: 220032-G-101.dgn

U.S. ARMY CORPS OF ENGINEERS
U.S. ARMY ENGINEER DISTRICT
NEW YORK
http://www.nan.usace.army.mil

MOFFATT & NICHOL
529 FIFTH AVE., 14TH FLOOR
NEW YORK, NY 10017
212-768-7454

NEW YORK - NEW JERSEY HARBOR AND TRIBUTARIES COASTAL STORM RISK TENTATIVELY SELECTED PLAN

SBM - SHEET KEY PLAN

SHEET ID
G-101

SHEET 4 OF 88

PRELIMINARY
NOT FOR CONSTRUCTION

RRF - KEY MAP

PATH: Q:\BA\220032-01\20 CADD_Active_SheetSet\220032-G-102.dgn
FILE: 220032-G-102.dgn
9/9/2022 11:14:02 AM
LAST PLOTTED BY: tocooper

US Army Corps of Engineers®

MARK	DESCRIPTION	DATE	APPR.
B	DRAFT for Public Review - NYNJHAT Study TSP Plan Set	09.23.22	MK
A	DRAFT for DOC-NYNJHAT Study - TSP Plan Set	08.26.22	MK

U.S. ARMY CORPS OF ENGINEERS
U.S. ARMY ENGINEER DISTRICT
NEW YORK
http://www.nan.usace.army.mil
MOFFATT & NICHOL
529 FIFTH AVE., 14TH FLOOR
NEW YORK, NY 10017
212-768-7454

DESIGNED BY: MK
DWN BY: AA
CKD BY: MK
SUBMITTED BY: SA
PLOT SCALE: AS SHOWN
PLOT DATE: 09/09/22
SIZE: ANSI D
FILE NAME: 220032-G-102.dgn
DATE: 09.09.22
SOLICITATION NO.:
CONTRACT NO.: 220032-2/1
FILE NUMBER:

NEW YORK - NEW JERSEY HARBOR AND TRIBUTARIES COASTAL STORM RISK TENTATIVELY SELECTED PLAN

RRF - SHEET KEY PLAN

SHEET ID
G-102
SHEET 5 OF 88

PRELIMINARY
NOT FOR CONSTRUCTION

SBM - SITE PLAN (1 OF 27)

PATH: \\mne.net\Projects\BA\220032-01\20 CADD_Active_SheetSet\220032-CS-101.dgn

FILE: 220032-CS-101.dgn

LAST PLOTTED BY: tocooper 10:54:42 AM 9/9/2022

US Army Corps of Engineers®

MARK	DESCRIPTION	DATE	APPR.
B	DRAFT for Public Review - NYNJHAT Study TSP Plan Set	09.23.22	MK
A	DRAFT for DQC-NYNJHAT Study - TSP Plan Set	08.26.22	MK

DESIGNED BY: IK
DATE: 09.09.22
DWN BY: AA
CKD BY: MK
SOLICITATION NO.:
SUBMITTED BY: SA
CONTRACT NO.: 220032-01
PLOT SCALE: AS SHOWN
PLOT DATE: 09/09/2022
FILE NUMBER:
SIZE: ANSI D
FILE NAME: 220032-CS-101.dgn

U.S. ARMY CORPS OF ENGINEERS
U.S. ARMY ENGINEER DISTRICT
NEW YORK
http://www.nan.usace.army.mil

MOFFATT & NICHOL
529 FIFTH AVE., 14TH FLOOR
NEW YORK, NY 10017
212-768-7454

NEW YORK - NEW JERSEY HARBOR AND TRIBUTARIES COASTAL STORM RISK TENTATIVELY SELECTED PLAN

SBM - SITE PLAN (1 OF 27)

SHEET ID
CS-101
SHEET 6 OF 88

PRELIMINARY
NOT FOR CONSTRUCTION

SBM - SITE PLAN (2 OF 27)

PATH: \\mne.net\Projects\BA\220032-01\20 CADD_Active_SheetSet\220032-CS-102.dgn

FILE: 220032-CS-102.dgn

LAST PLOTTED BY: tocooper 10:54:46 AM 9/9/2022

US Army Corps of Engineers®

MARK	DESCRIPTION	DATE	APPR.
B	DRAFT for Public Review - NY/NJ/HAT Study TSP Plan Set	09.23.22	MK
A	DRAFT for DQC-NY/NJ/HAT Study - TSP Plan Set	08.26.22	MK

U.S. ARMY CORPS OF ENGINEERS
U.S. ARMY ENGINEER DISTRICT
NEW YORK
http://www.nan.usace.army.mil
MOFFATT & NICHOL
529 FIFTH AVE., 14TH FLOOR
NEW YORK, NY 10017
212-768-7454

DESIGNED BY: IK | DATE: 09.09.22
DWN BY: AA | CKD BY: MK | SOLICITATION NO.:
SUBMITTED BY: SA | CONTRACT NO.: 220032-001
PLOT SCALE: AS SHOWN | PLOT DATE: 09/09/2022 | FILE NUMBER:
SIZE: ANSI D | FILE NAME: 220032-CS-102.dgn

NEW YORK - NEW JERSEY HARBOR AND TRIBUTARIES COASTAL STORM RISK TENTATIVELY SELECTED PLAN

SBM - SITE PLAN (2 OF 27)

SHEET ID
CS-102
SHEET 7 OF 88

PATH: \\mne.net\Projects\BA\220032-01\20 CADD_Active_SheetSet\220032-CS-103.dgn

FILE: 220032-CS-103.dgn 9/13/2022 1:47:01 PM pvoelker

LAST PLOTTED BY:

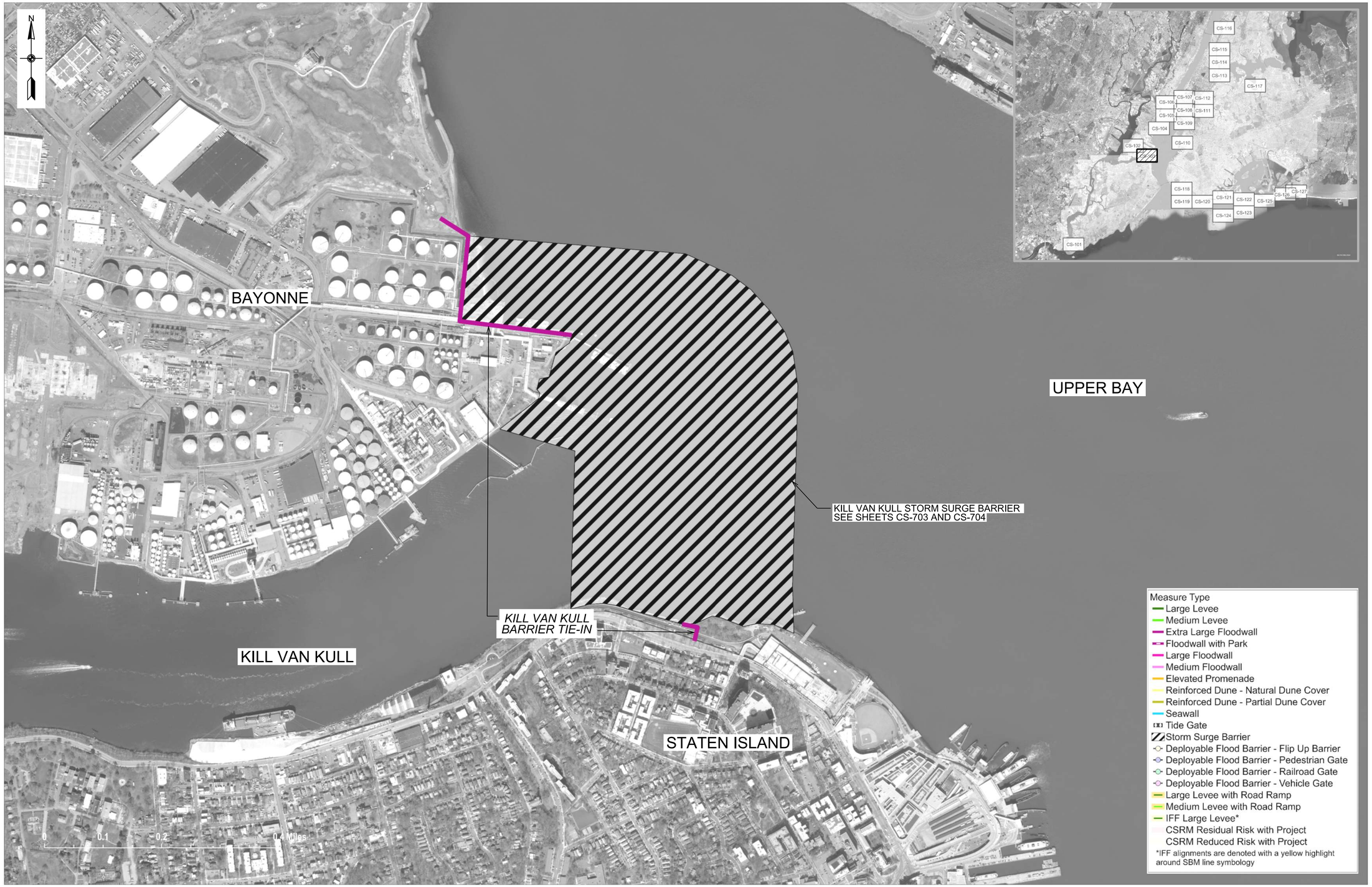

PRELIMINARY
NOT FOR CONSTRUCTION

SBM - SITE PLAN (3 OF 27)

US Army Corps of Engineers®

MARK	DESCRIPTION	DATE	APPR.
B	DRAFT for Public Review - NYNJHAT Study TSP Plan Set	09.23.22	MK
A	DRAFT for DQC-NYNJHAT Study - TSP Plan Set	08.26.22	MK

U.S. ARMY CORPS OF ENGINEERS
U.S. ARMY ENGINEER DISTRICT
NEW YORK
http://www.nan.usace.army.mil
MOFFATT & NICHOL
529 FIFTH AVE., 14TH FLOOR
NEW YORK, NY 10017
212-768-7454

DESIGNED BY: IK | DATE: 09.09.22
DWN BY: AA | CKD BY: MK | SOLICITATION NO.:
SUBMITTED BY: SA | CONTRACT NO.: 220032-201
PLOT SCALE: AS SHOWN | PLOT DATE: 9/13/2022 | FILE NUMBER:
SIZE: ANSI D | FILE NAME: 220032-CS-103.dgn

NEW YORK - NEW JERSEY HARBOR AND TRIBUTARIES COASTAL STORM RISK TENTATIVELY SELECTED PLAN

SBM - SITE PLAN (3 OF 27)

SHEET ID
CS-103
SHEET 8 OF 88

PATH: \\mne.net\Projects\BA\220032-01\20 CADD_Active_SheetSet\220032-CS-104.dgn

FILE: 220032-CS-104.dgn

9/9/2022

10:55:19 AM

tocooper

LAST PLOTTED BY:

PRELIMINARY
NOT FOR CONSTRUCTION

SBM - SITE PLAN (4 OF 27)

US Army Corps of Engineers®

MARK	DESCRIPTION	DATE	APPR.
B	DRAFT for Public Review - NYNJHAT Study TSP Plan Set	09.23.22	MK
A	DRAFT for DQC-NYNJHAT Study - TSP Plan Set	08.26.22	MK

DATE: 09.09.22
SOLICITATION NO.:
CONTRACT NO.: 220032-01
FILE NUMBER:

DESIGNED BY: IK
DWN BY: AA
CKD BY: MK
SUBMITTED BY: SA
PLOT SCALE: ASSIGNED
PLOT DATE: 9/9/2022
SIZE: ANSI D
FILE NAME: 220032-CS-104.dgn

U.S. ARMY CORPS OF ENGINEERS
U.S. ARMY ENGINEER DISTRICT
NEW YORK
http://www.nan.usace.army.mil

MOFFATT & NICHOL
529 FIFTH AVE., 14TH FLOOR
NEW YORK, NY 10017
212-768-7454

NEW YORK - NEW JERSEY HARBOR AND TRIBUTARIES COASTAL STORM RISK TENTATIVELY SELECTED PLAN

SBM - SITE PLAN (4 OF 27)

SHEET ID
CS-104

SHEET 9 OF 88

PATH: \\mne.net\Projects\BA\220032-01\20 CADD_Active_SheetSet\220032-CS-105.dgn

FILE: 220032-CS-105.dgn 9/9/2022 10:55:35 AM tocooper

LAST PLOTTED BY:

PRELIMINARY
NOT FOR CONSTRUCTION

SBM - SITE PLAN (5 OF 27)

US Army Corps of Engineers®

MARK	DESCRIPTION	DATE	APPR.
B	DRAFT for Public Review - NYNJHAT Study TSP Plan Set	09.23.22	MK
A	DRAFT for DOC-NYNJHAT Study - TSP Plan Set	08.26.22	MK

DESIGNED BY: IK
DATE: 09.09.22
DWN BY: AA
CKD BY: MK
SOLICITATION NO.:
SUBMITTED BY: SA
CONTRACT NO.: 220032-01
PLOT SCALE: AS SHOWN
PLOT DATE: 09/09/22
FILE NUMBER:
SIZE: ANSI D
FILE NAME: 220032-CS-105.dgn

U.S. ARMY CORPS OF ENGINEERS
U.S. ARMY ENGINEER DISTRICT
NEW YORK
http://www.nan.usace.army.mil

MOFFATT & NICHOL
529 FIFTH AVE., 14TH FLOOR
NEW YORK, NY 10017
212-768-7454

NEW YORK - NEW JERSEY HARBOR AND TRIBUTARIES COASTAL STORM RISK TENTATIVELY SELECTED PLAN

SBM - SITE PLAN (5 OF 27)

SHEET ID
CS-105

SHEET 10 OF 88

PRELIMINARY
NOT FOR CONSTRUCTION

SBM - SITE PLAN (6 OF 27)

US Army Corps of Engineers®

MARK	DESCRIPTION	DATE	APPR.
B	DRAFT for Public Review - NYNJHAT Study TSP Plan Set	09.23.22	MK
A	DRAFT for DQC-NYNJHAT Study - TSP Plan Set	08.26.22	MK

DESIGNED BY: IK | DATE: 09.09.22
DWN BY: AA | CKD BY: MK | SOLICITATION NO.:
SUBMITTED BY: SA | CONTRACT NO.: 220032-01
PLOT SCALE: AS SHOWN | PLOT DATE: 9/9/2022 | FILE NUMBER:
SIZE: ANSI D | FILE NAME: 220032-CS-106.dgn

U.S. ARMY CORPS OF ENGINEERS
U.S. ARMY ENGINEER DISTRICT
NEW YORK
http://www.nan.usace.army.mil

MOFFATT & NICHOL
529 FIFTH AVE., 14TH FLOOR
NEW YORK, NY 10017
212-768-7454

NEW YORK - NEW JERSEY HARBOR AND TRIBUTARIES COASTAL STORM RISK TENTATIVELY SELECTED PLAN

SBM - SITE PLAN (6 OF 27)

SHEET ID
CS-106
SHEET 11 OF 88

PATH: \\mne.net\Projects\BA\220032-01\20 CADD_Active_SheetSet\220032-CS-107.dgn

FILE: 220032-CS-107.dgn

9/9/2022 10:56:14 AM

LAST PLOTTED BY: tocooper

PRELIMINARY
NOT FOR CONSTRUCTION

SBM - SITE PLAN (7 OF 27)

US Army Corps of Engineers®

MARK	DESCRIPTION	DATE	APPR.
B	DRAFT for Public Review - NYNJHAT Study TSP Plan Set	09.23.22	MK
A	DRAFT for DQC-NYNJHAT Study - TSP Plan Set	08.26.22	MK

DESIGNED BY: IK
DWN BY: AA
CKD BY: MK
SUBMITTED BY: SA
PLOT SCALE: AS SHOWN
PLOT DATE: 9/9/2022
SIZE: ANSI D
FILE NAME: 220032-CS-107.dgn
DATE: 09.09.22
SOLICITATION NO.:
CONTRACT NO.: 220032-01
FILE NUMBER:

U.S. ARMY CORPS OF ENGINEERS
U.S. ARMY ENGINEER DISTRICT
NEW YORK
http://www.nan.usace.army.mil
MOFFATT & NICHOL
529 FIFTH AVE., 14TH FLOOR
NEW YORK, NY 10017
212-768-7454

NEW YORK - NEW JERSEY HARBOR AND TRIBUTARIES COASTAL STORM RISK TENTATIVELY SELECTED PLAN

SBM - SITE PLAN (7 OF 27)

SHEET ID
CS-107
SHEET 12 OF 88

PRELIMINARY
NOT FOR CONSTRUCTION

SBM - SITE PLAN (8 OF 27)

PATH: \\mne.net\Projects\BA\220032-01\20 CADD_Active_SheetSet\220032-CS-108.dgn

FILE: 220032-CS-108.dgn

LAST PLOTTED BY: tocooper 10:56:34 AM 9/9/2022

US Army Corps of Engineers®

MARK	DESCRIPTION	DATE	APPR.
B	DRAFT for Public Review - NYNJHAT Study TSP Plan Set	09.23.22	MK
A	DRAFT for DQC-NYNJHAT Study - TSP Plan Set	08.26.22	MK

DESIGNED BY: KK
DWN BY: AA
CKD BY: MK
SUBMITTED BY: SA
PLOT SCALE: AS SHOWN
PLOT DATE: 09/09/22
SIZE: ANSI D
FILE NAME: 220032-CS-108.dgn
DATE: 09.09.22
SOLICITATION NO.:
CONTRACT NO.: 220032-01
FILE NUMBER:

U.S. ARMY CORPS OF ENGINEERS
U.S. ARMY ENGINEER DISTRICT
NEW YORK
http://www.nan.usace.army.mil
MOFFATT & NICHOL
529 FIFTH AVE., 14TH FLOOR
NEW YORK, NY 10017
212-768-7454

NEW YORK - NEW JERSEY HARBOR AND TRIBUTARIES COASTAL STORM RISK TENTATIVELY SELECTED PLAN

SBM - SITE PLAN (8 OF 27)

SHEET ID
CS-108

SHEET 13 OF 88

PRELIMINARY
NOT FOR CONSTRUCTION

SBM - SITE PLAN (9 OF 27)

PATH: \\mne.net\Projects\BA\220032-01\20 CADD_Active_SheetSet\220032-CS-109.dgn

FILE: 220032-CS-109.dgn

LAST PLOTTED BY: tocooper 10:56:54 AM 9/9/2022

US Army Corps of Engineers®

MARK	DESCRIPTION	DATE	APPR.
B	DRAFT for Public Review - NYNJHAT Study TSP Plan Set	09.23.22	MK
A	DRAFT for DOC-NYNJHAT Study - TSP Plan Set	08.26.22	MK

DESIGNED BY: IK
DWN BY: AA
CKD BY: MK
SUBMITTED BY: SA
PLOT SCALE: AS SHOWN
PLOT DATE: 9/9/2022
SIZE: ANSI D
FILE NAME: 220032-CS-109.dgn
DATE: 09.09.22
SOLICITATION NO.:
CONTRACT NO.: 220032-01
FILE NUMBER:

U.S. ARMY CORPS OF ENGINEERS
U.S. ARMY ENGINEER DISTRICT
NEW YORK
http://www.nan.usace.army.mil

MOFFATT & NICHOL
529 FIFTH AVE., 14TH FLOOR
NEW YORK, NY 10017
212-768-7454

NEW YORK - NEW JERSEY HARBOR AND TRIBUTARIES COASTAL STORM RISK TENTATIVELY SELECTED PLAN

SBM - SITE PLAN (9 OF 27)

SHEET ID
CS-109

SHEET 14 OF 88

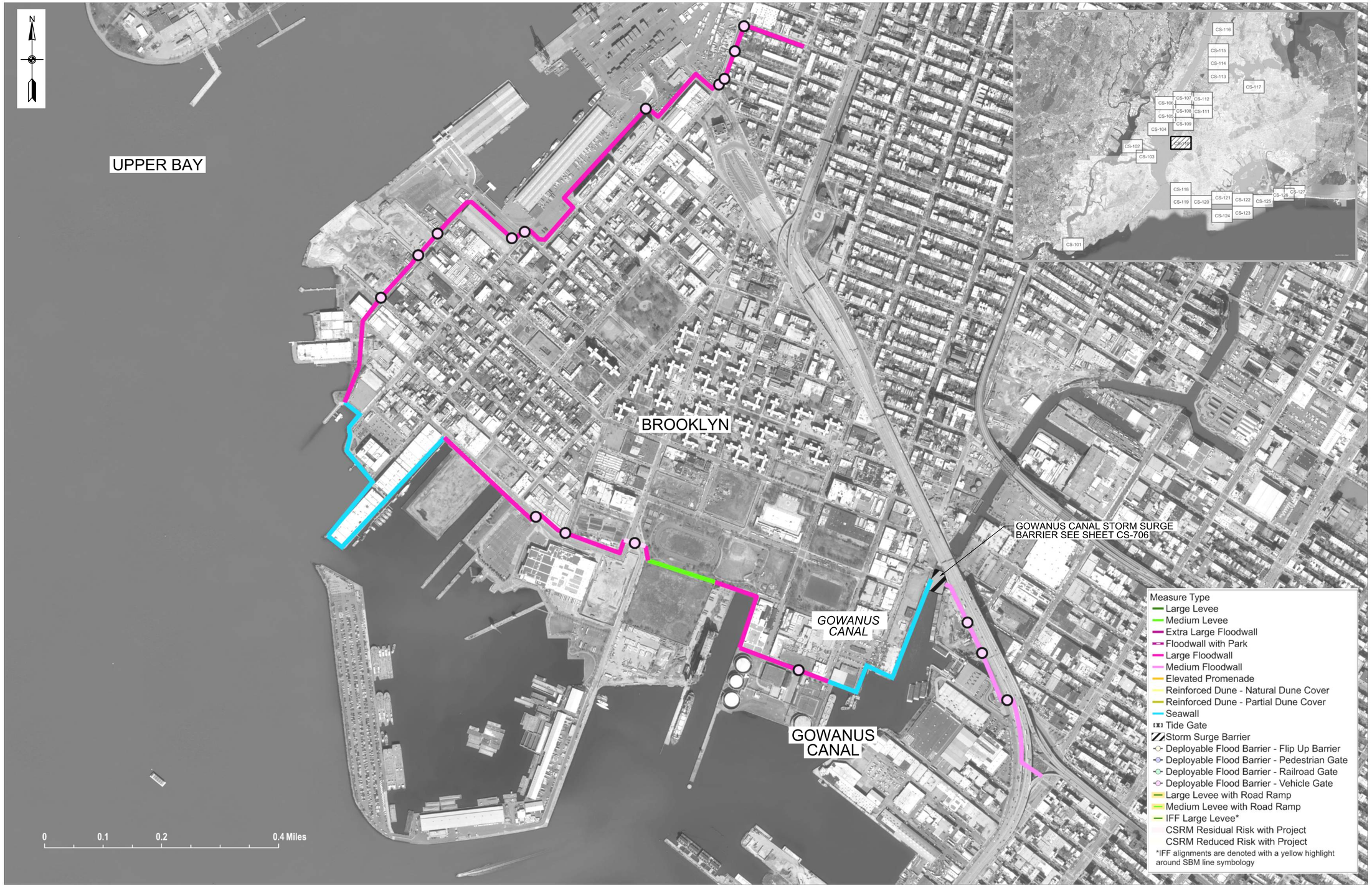

PRELIMINARY
NOT FOR CONSTRUCTION

SBM - SITE PLAN (10 OF 27)

PATH: \\mne.net\Projects\BA\220032-01\20 CADD_Active_SheetSet\220032-CS-110.dgn

FILE: 220032-CS-110.dgn

LAST PLOTTED BY: tocooper 10:57:12 AM 9/9/2022

US Army Corps of Engineers®

MARK	DESCRIPTION	DATE	APPR.
B	DRAFT for Public Review - NYNJHAT Study TSP Plan Set	09.23.22	MK
A	DRAFT for DQC-NYNJHAT Study - TSP Plan Set	08.26.22	MK

DESIGNED BY: IK
DWN BY: AA
CKD BY: MK
SUBMITTED BY: SA
PLOT SCALE: 1:40000
PLOT DATE: 9/9/2022
DGN: ANSI D
DATE: 09.09.22
SOLICITATION NO.:
CONTRACT NO.: 220032-01
FILE NUMBER:
FILE NAME: 220032-CS-110.dgn

U.S. ARMY CORPS OF ENGINEERS
U.S. ARMY ENGINEER DISTRICT
NEW YORK
http://www.nan.usace.army.mil

MOFFATT & NICHOL
529 FIFTH AVE., 14TH FLOOR
NEW YORK, NY 10017
212-768-7454

NEW YORK - NEW JERSEY HARBOR AND TRIBUTARIES COASTAL STORM RISK
TENTATIVELY SELECTED PLAN

SBM - SITE PLAN (10 OF 27)

SHEET ID
CS-110

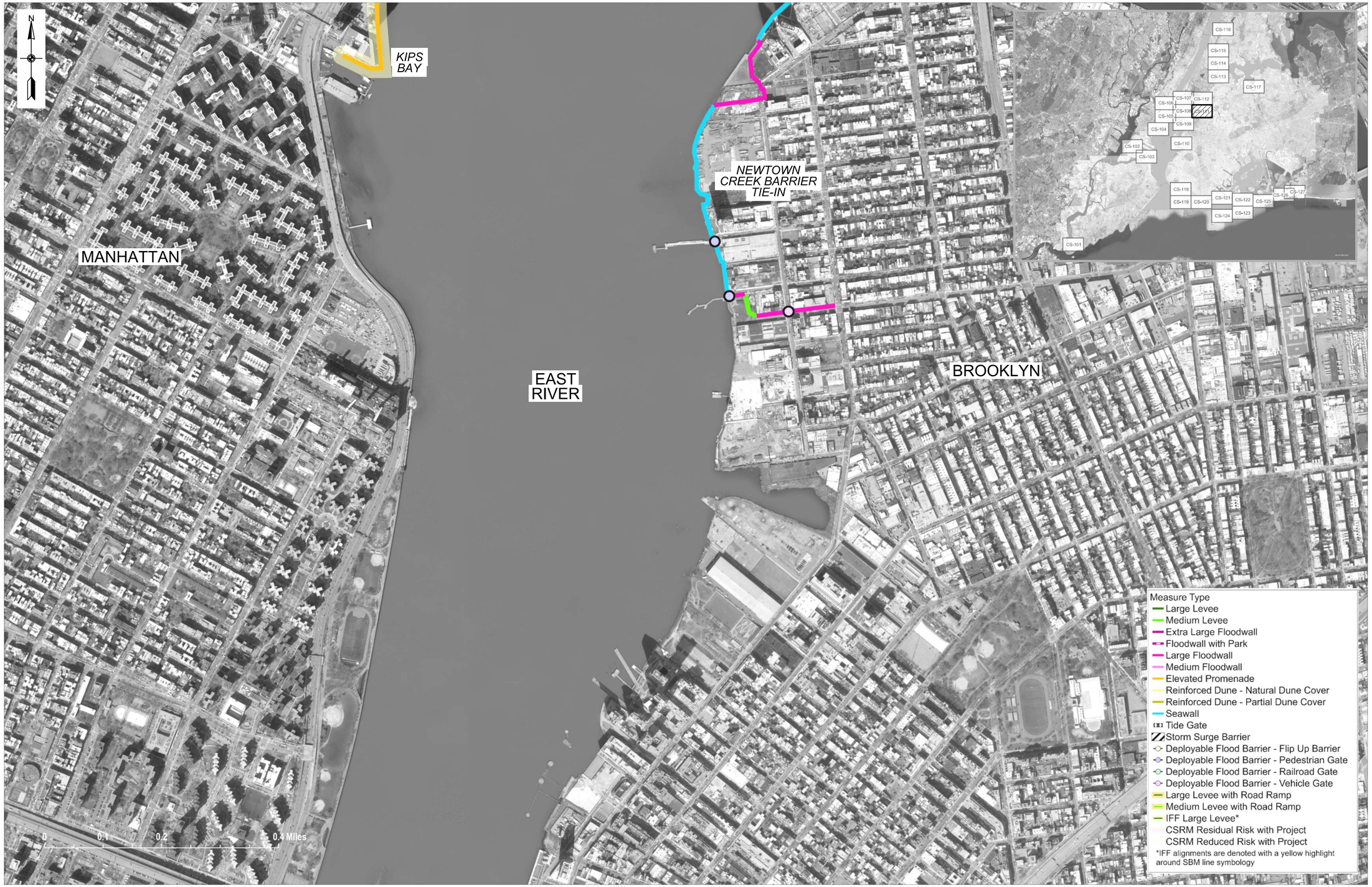

PRELIMINARY
NOT FOR CONSTRUCTION

SBM - SITE PLAN (11 OF 27)

PATH: \\mne.net\Projects\BA\220032-01\20 CADD_Active_SheetSet\220032-CS-111.dgn

FILE: 220032-CS-111.dgn

LAST PLOTTED BY: tocooper 10:57:31 AM 9/9/2022

US Army Corps of Engineers®

MARK	DESCRIPTION	DATE	APPR.
B	DRAFT for Public Review - NYNJHAT Study TSP Plan Set	09.23.22	MK
A	DRAFT for DQC-NYNJHAT Study - TSP Plan Set	08.26.22	MK

DESIGNED BY: IK
DWN BY: AA
CKD BY: MK
SUBMITTED BY: SA
PLOT SCALE: AS SHOWN
PLOT DATE: 9/9/2022
SIZE: ANSI D
FILE NAME: 220032-CS-111.dgn
DATE: 09.09.22
SOLICITATION NO.:
CONTRACT NO.: 220032-01
FILE NUMBER:

U.S. ARMY CORPS OF ENGINEERS
U.S. ARMY ENGINEER DISTRICT
NEW YORK
http://www.nan.usace.army.mil

MOFFATT & NICHOL
529 FIFTH AVE., 14TH FLOOR
NEW YORK, NY 10017
212-768-7454

NEW YORK - NEW JERSEY HARBOR AND TRIBUTARIES COASTAL STORM RISK TENTATIVELY SELECTED PLAN

SBM - SITE PLAN (11 OF 27)

SHEET ID
CS-111

SHEET 16 OF 88

PATH: \\mne.net\Projects\BA\220032-01\20 CADD_Active_SheetSet\220032-CS-112.dgn

FILE: 220032-CS-112.dgn

9/9/2022 10:57:50 AM

LAST PLOTTED BY: tocooper

PRELIMINARY
NOT FOR CONSTRUCTION

SBM - SITE PLAN (12 OF 27)

US Army Corps of Engineers®

MARK	DESCRIPTION	DATE	APPR.
B	DRAFT for Public Review - NYNJHAT Study TSP Plan Set	09.23.22	MK
A	DRAFT for DOC-NYNJHAT Study - TSP Plan Set	08.26.22	MK

DESIGNED BY: IK
DWN BY: AA
CKD BY: MK
SUBMITTED BY: SA
PLOT SCALE: 1:400000
PLOT DATE: 9/9/2022
DATE: 09.09.22
SOLICITATION NO.:
CONTRACT NO.: 220032-01
FILE NUMBER:
SIZE: ANSI D
FILE NAME: 220032-CS-112.dgn

U.S. ARMY CORPS OF ENGINEERS
U.S. ARMY ENGINEER DISTRICT
NEW YORK
http://www.nan.usace.army.mil
MOFFATT & NICHOL
529 FIFTH AVE., 14TH FLOOR
NEW YORK, NY 10017
212-768-7454

NEW YORK - NEW JERSEY HARBOR AND TRIBUTARIES COASTAL STORM RISK TENTATIVELY SELECTED PLAN

SBM - SITE PLAN (12 OF 27)

SHEET ID
CS-112
SHEET 17 OF 88

PRELIMINARY
NOT FOR CONSTRUCTION

SBM - SITE PLAN (13 OF 27)

US Army Corps of Engineers®

MARK	DESCRIPTION	DATE	APPR.
B	DRAFT for Public Review - NYNJHAT Study TSP Plan Set	09.23.22	MK
A	DRAFT for DQC-NYNJHAT Study - TSP Plan Set	08.26.22	MK

DESIGNED BY: IK | DATE: 09.09.22
DWN BY: AA | CKD BY: MK | SOLICITATION NO.:
SUBMITTED BY: SA | CONTRACT NO.: 220032-01
PLOT SCALE: AS SHOWN | PLOT DATE: 09/09/2022 | FILE NUMBER:
SIZE: ANSI D | FILE NAME: 220032-CS-113.dgn

U.S. ARMY CORPS OF ENGINEERS
U.S. ARMY ENGINEER DISTRICT
NEW YORK
http://www.nan.usace.army.mil
MOFFATT & NICHOL
529 FIFTH AVE., 14TH FLOOR
NEW YORK, NY 10017
212-768-7454

NEW YORK - NEW JERSEY HARBOR AND TRIBUTARIES COASTAL STORM RISK
TENTATIVELY SELECTED PLAN

SBM - SITE PLAN (13 OF 27)

SHEET ID
CS-113
SHEET 18 OF 88

PATH: \\mne.net\Projects\BA\220032-01\20 CADD_Active_SheetSet\220032-CS-113.dgn
FILE: 220032-CS-113.dgn
9/9/2022 10:58:10 AM
LAST PLOTTED BY: tocooper

PRELIMINARY
NOT FOR CONSTRUCTION

SBM - SITE PLAN (14 OF 27)

US Army Corps of Engineers®

MARK	DESCRIPTION	DATE	APPR.
B	DRAFT for Public Review - NYNJHAT Study TSP Plan Set	09.23.22	MK
A	DRAFT for DQC-NYNJHAT Study - TSP Plan Set	08.26.22	MK

DATE: 09.09.22
SOLICITATION NO.:
CONTRACT NO.: 220032-01
FILE NUMBER:
PLOT DATE: 9/9/2022
PLOT SCALE: AS SHOWN
PLOT SIZE: ANSI D
FILE NAME: 220032-CS-114.dgn

DESIGNED BY: IK
DWN BY: AA
CKD BY: MK
SUBMITTED BY: SA

U.S. ARMY CORPS OF ENGINEERS
U.S. ARMY ENGINEER DISTRICT
NEW YORK
http://www.nan.usace.army.mil

MOFFATT & NICHOL
529 FIFTH AVE., 14TH FLOOR
NEW YORK, NY 10017
212-768-7454

NEW YORK - NEW JERSEY HARBOR AND TRIBUTARIES COASTAL STORM RISK TENTATIVELY SELECTED PLAN

SBM - SITE PLAN (14 OF 27)

SHEET ID
CS-114

SHEET 19 OF 88

PATH: \\mne.net\Projects\BA\220032-01\20 CADD_Active_SheetSet\220032-CS-114.dgn
FILE: 220032-CS-114.dgn
9/9/2022 10:58:30 AM
LAST PLOTTED BY: tocooper

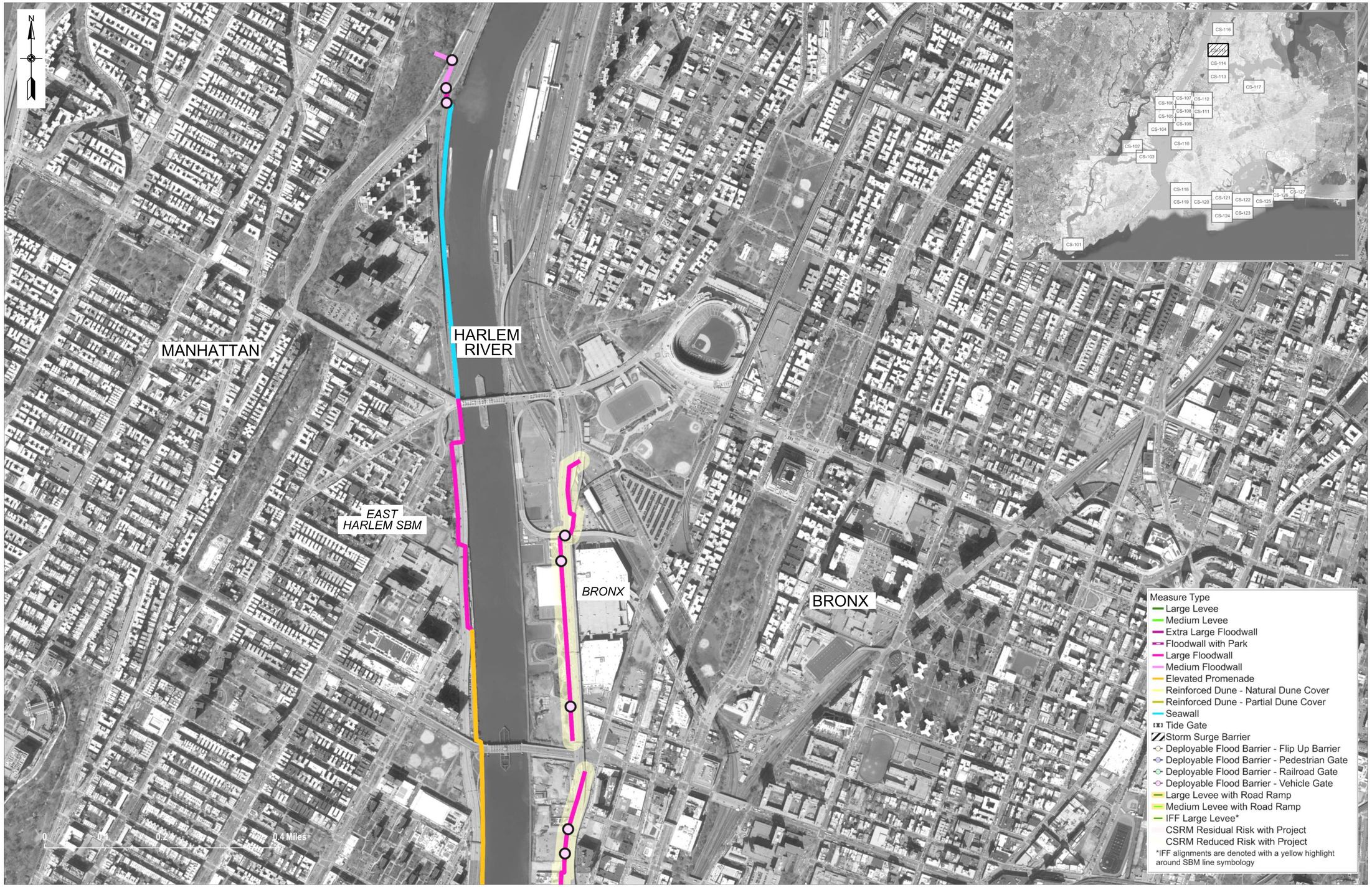

PRELIMINARY
NOT FOR CONSTRUCTION

SBM - SITE PLAN (15 OF 27)

PATH: \\mne.net\Projects\BA\220032-01\20 CADD_Active_SheetSet\220032-CS-115.dgn

FILE: 220032-CS-115.dgn

9/9/2022 10:58:50 AM

LAST PLOTTED BY: tocooper

US Army Corps of Engineers®

MARK	DESCRIPTION	DATE	APPR.
B	DRAFT for Public Review - NYNJHAT Study TSP Plan Set	09.23.22	MK
A	DRAFT for DQC-NYNJHAT Study - TSP Plan Set	08.26.22	MK

DESIGNED BY: IK | DATE: 09.09.22
DWN BY: AA | CKD BY: MK | SOLICITATION NO.:
SUBMITTED BY: SA | CONTRACT NO.: 220032-01
PLOT SCALE: As shown | PLOT DATE: | FILE NUMBER:
SIZE: ANSI D | FILE NAME: 220032-CS-115.dgn

U.S. ARMY CORPS OF ENGINEERS
U.S. ARMY ENGINEER DISTRICT
NEW YORK
http://www.nan.usace.army.mil
MOFFATT & NICHOL
529 FIFTH AVE., 14TH FLOOR
NEW YORK, NY 10017
212-768-7454

NEW YORK - NEW JERSEY HARBOR AND TRIBUTARIES COASTAL STORM RISK TENTATIVELY SELECTED PLAN

SBM - SITE PLAN (15 OF 27)

SHEET ID
CS-115
SHEET 20 OF 88

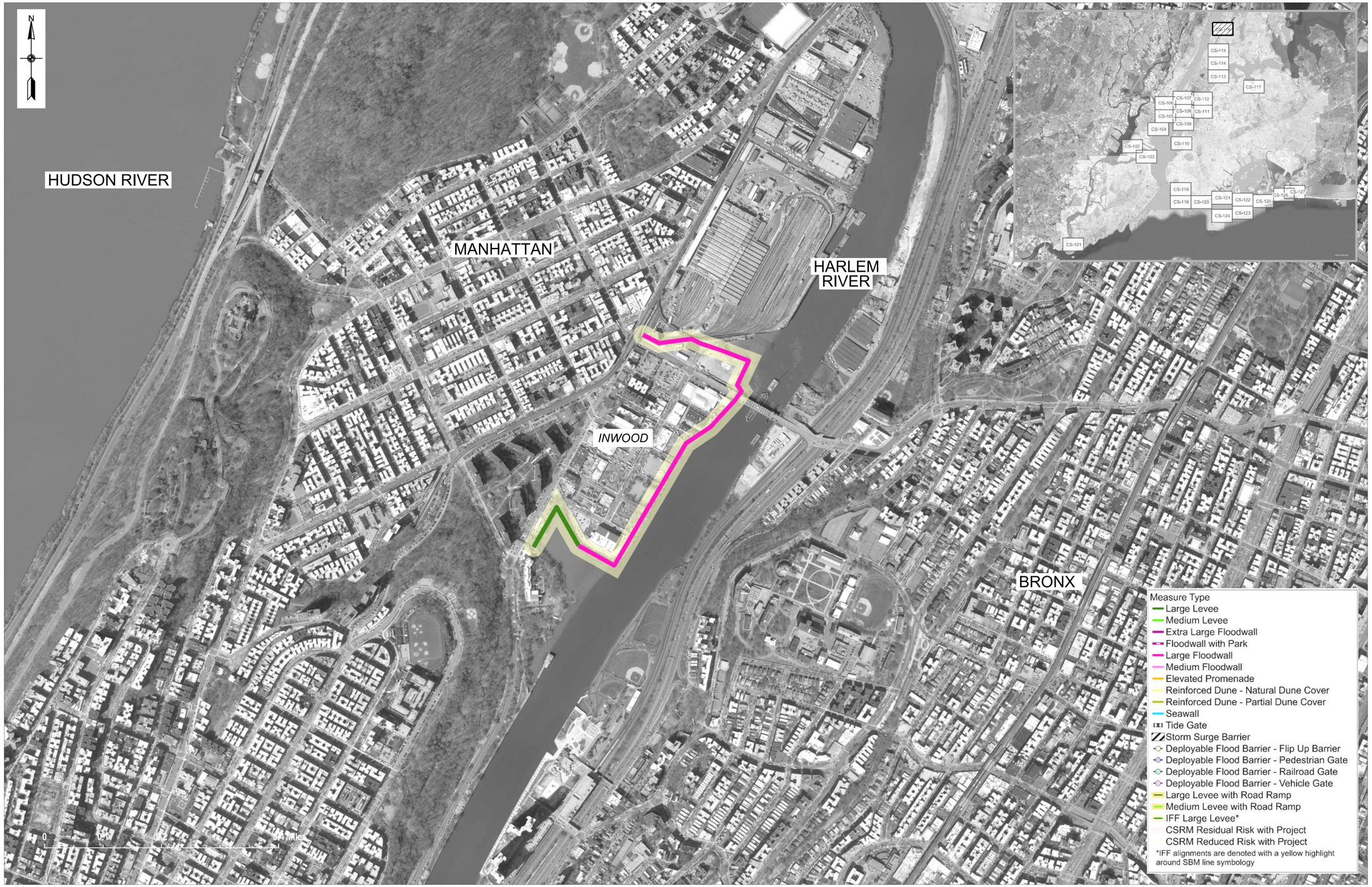

PRELIMINARY
NOT FOR CONSTRUCTION

SBM - SITE PLAN (16 OF 27)

US Army Corps of Engineers®

MARK	DESCRIPTION	DATE	APPR.
B	DRAFT for Public Review - NY/NJ/HAT Study TSP Plan Set	09.23.22	MK
A	DRAFT for DQC-NY/NJ/HAT Study - TSP Plan Set	08.26.22	MK

DATE: 09.09.22
SOLICITATION NO.:
CONTRACT NO.: 220032-01
FILE NUMBER:
PLOT DATE: 9/9/2022
FILE NAME: 220032-CS-116.dgn

DESIGNED BY: IK
DWN BY: AA
CKD BY: MK
SUBMITTED BY: SA
PLOT SCALE: AS SHOWN
SIZE: ANSI D

U.S. ARMY CORPS OF ENGINEERS
U.S. ARMY ENGINEER DISTRICT
NEW YORK
http://www.nan.usace.army.mil

MOFFATT & NICHOL
529 FIFTH AVE., 14TH FLOOR
NEW YORK, NY 10017
212-768-7454

NEW YORK - NEW JERSEY HARBOR AND TRIBUTARIES COASTAL STORM RISK TENTATIVELY SELECTED PLAN

SBM - SITE PLAN (16 OF 27)

SHEET ID
CS-116

SHEET 21 OF 88

PATH: \\mne.net\Projects\BA\220032-01\20 CADD_Active_SheetSet\220032-CS-116.dgn
FILE: 220032-CS-116.dgn
9/9/2022 10:59:12 AM
LAST PLOTTED BY: tocooper

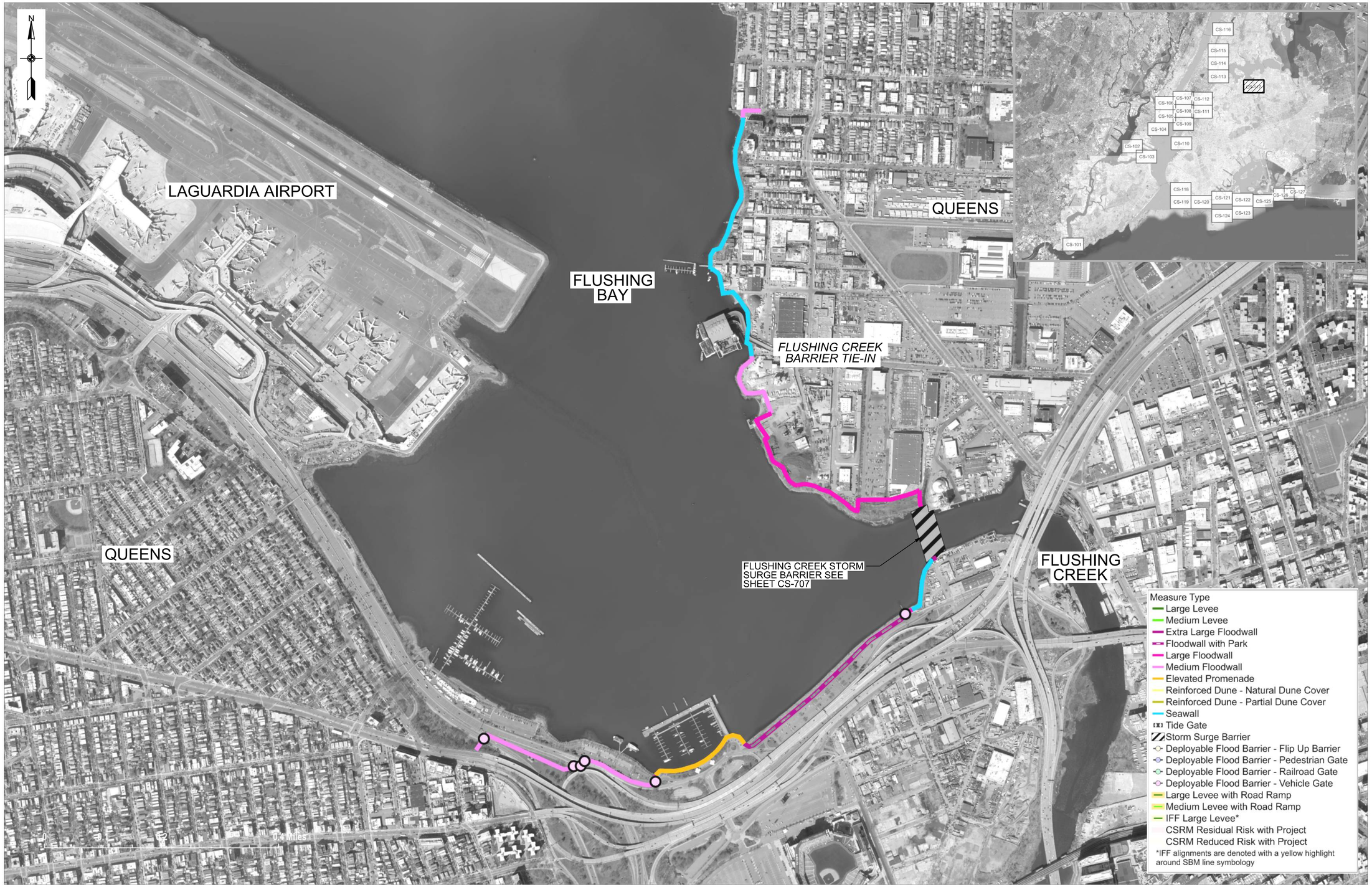

PRELIMINARY
NOT FOR CONSTRUCTION

SBM - SITE PLAN (17 OF 27)

US Army Corps of Engineers®

MARK	DESCRIPTION	DATE	APPR.
B	DRAFT for Public Review - NYNJHAT Study TSP Plan Set	09.23.22	MK
A	DRAFT for DQC-NYNJHAT Study - TSP Plan Set	08.26.22	MK

U.S. ARMY CORPS OF ENGINEERS
U.S. ARMY ENGINEER DISTRICT
NEW YORK
http://www.nan.usace.army.mil

MOFFATT & NICHOL
529 FIFTH AVE., 14TH FLOOR
NEW YORK, NY 10017
212-768-7454

DESIGNED BY: IK | DATE: 09.09.22
DWN BY: AA | CKD BY: MK | SOLICITATION NO.:
SUBMITTED BY: SA | CONTRACT NO.: 220032-01
PLOT SCALE: AS SHOWN | PLOT DATE: 9/9/2022 | FILE NUMBER:
PLOT SIZE: ANSI D | FILE NAME: 220032-CS-117.dgn

NEW YORK - NEW JERSEY HARBOR AND TRIBUTARIES COASTAL STORM RISK TENTATIVELY SELECTED PLAN

SBM - SITE PLAN (17 OF 27)

SHEET ID
CS-117
SHEET 22 OF 88

PATH: \\mne.net\Projects\BA\220032-01\20 CADD_Active_SheetSet\220032-CS-117.dgn
FILE: 220032-CS-117.dgn
9/9/2022 10:59:32 AM
LAST PLOTTED BY: tocooper

PRELIMINARY
NOT FOR CONSTRUCTION

SBM - SITE PLAN (18 OF 27)

US Army Corps of Engineers®

MARK	DESCRIPTION	DATE	APPR.
B	DRAFT for Public Review - NYNJHAT Study TSP Plan Set	09.23.22	MK
A	DRAFT for DQC-NYNJHAT Study - TSP Plan Set	08.26.22	MK

U.S. ARMY CORPS OF ENGINEERS
U.S. ARMY ENGINEER DISTRICT
NEW YORK
http://www.nan.usace.army.mil
MOFFATT & NICHOL
529 FIFTH AVE., 14TH FLOOR
NEW YORK, NY 10017
212-768-7454

DESIGNED BY: IK | DWN BY: AA | CKD BY: MK | SUBMITTED BY: SA | PLOT SCALE: AS SHOWN | PLOT DATE: 9/9/2022 | SIZE: ANSI D | FILE NAME: 220032-CS-118.dgn | DATE: 09.09.22 | SOLICITATION NO.: | CONTRACT NO.: 220032-01 | FILE NUMBER:

NEW YORK - NEW JERSEY HARBOR AND TRIBUTARIES COASTAL STORM RISK TENTATIVELY SELECTED PLAN

SBM - SITE PLAN (18 OF 27)

SHEET ID
CS-118
SHEET 23 OF 88

PRELIMINARY
NOT FOR CONSTRUCTION

SBM - SITE PLAN (19 OF 27)

US Army Corps of Engineers®

MARK	DESCRIPTION	DATE	APPR.
B	DRAFT for Public Review - NYNJHAT Study TSP Plan Set	09.23.22	MK
A	DRAFT for DQC-NYNJHAT Study - TSP Plan Set	08.26.22	MK

U.S. ARMY CORPS OF ENGINEERS
U.S. ARMY ENGINEER DISTRICT
NEW YORK
http://www.nan.usace.army.mil
MOFFATT & NICHOL
529 FIFTH AVE., 14TH FLOOR
NEW YORK, NY 10017
212-768-7454

DESIGNED BY: IK | DATE: 09.09.22
DWN BY: AA | CKD BY: MK | SOLICITATION NO.:
SUBMITTED BY: SA | CONTRACT NO.: 220032-001
PLOT SCALE: 1:50000 | PLOT DATE: 9/9/2022 | FILE NUMBER:
SIZE: ANSI D | FILE NAME: 220032-CS-119.dgn

NEW YORK - NEW JERSEY HARBOR AND TRIBUTARIES COASTAL STORM RISK TENTATIVELY SELECTED PLAN

SBM - SITE PLAN (19 OF 27)

SHEET ID
CS-119
SHEET 24 OF 88

PATH: \\mne.net\Projects\BA\220032-01\20 CADD_Active_SheetSet\220032-CS-119.dgn
FILE: 220032-CS-119.dgn 9/9/2022 11:00:05 AM tocooper
LAST PLOTTED BY:

PATH: \\mne.net\Projects\BA\220032-01\20 CADD_Active_SheetSet\220032-CS-120.dgn

FILE: 220032-CS-120.dgn 9/9/2022 11:03:04 AM tocooper

LAST PLOTTED BY:

PRELIMINARY
NOT FOR CONSTRUCTION

SBM - SITE PLAN (20 OF 27)

US Army Corps of Engineers®

MARK	DESCRIPTION	DATE	APPR.
B	DRAFT for Public Review - NYNJHAT Study TSP Plan Set	09.23.22	MK
A	DRAFT for DQC-NYNJHAT Study - TSP Plan Set	08.26.22	MK

U.S. ARMY CORPS OF ENGINEERS
U.S. ARMY ENGINEER DISTRICT
NEW YORK
http://www.nan.usace.army.mil

MOFFATT & NICHOL
529 FIFTH AVE., 14TH FLOOR
NEW YORK, NY 10017
212-768-7454

DESIGNED BY: IK
DWN BY: AA
CKD BY: MK
SUBMITTED BY: SA
PLOT SCALE: As shown
PLOT DATE: 9/9/2022
SIZE: ANSI D
FILE NAME: 220032-CS-120.dgn
DATE: 08.08.22
SOLICITATION NO.:
CONTRACT NO.: 220032-01
FILE NUMBER:

NEW YORK - NEW JERSEY HARBOR AND TRIBUTARIES COASTAL STORM RISK TENTATIVELY SELECTED PLAN

SBM - SITE PLAN (20 OF 27)

SHEET ID
CS-120

SHEET 25 OF 88

PRELIMINARY
NOT FOR CONSTRUCTION

SBM - SITE PLAN (21 OF 27)

US Army Corps of Engineers®

MARK	DESCRIPTION	DATE	APPR.
B	DRAFT for Public Review - NYNJHAT Study TSP Plan Set	09.23.22	MK
A	DRAFT for DQC-NYNJHAT Study - TSP Plan Set	08.26.22	MK

DESIGNED BY: IK
DWN BY: AA
CKD BY: MK
SUBMITTED BY: SA
PLOT SCALE: 1:50000
PLOT DATE: 9/9/2022
SIZE: ANSI D
FILE NAME: 220032-CS-121.dgn
DATE: 09.09.22
SOLICITATION NO.:
CONTRACT NO.: 220032-01
FILE NUMBER:

U.S. ARMY CORPS OF ENGINEERS
U.S. ARMY ENGINEER DISTRICT
NEW YORK
http://www.nan.usace.army.mil

MOFFATT & NICHOL
529 FIFTH AVE., 14TH FLOOR
NEW YORK, NY 10017
212-768-7454

NEW YORK - NEW JERSEY HARBOR AND TRIBUTARIES COASTAL STORM RISK
TENTATIVELY SELECTED PLAN

SBM - SITE PLAN (21 OF 27)

SHEET ID
CS-121
SHEET 26 OF 88

PRELIMINARY
NOT FOR CONSTRUCTION

SBM - SITE PLAN (22 OF 27)

US Army Corps of Engineers®

MARK	DESCRIPTION	DATE	APPR.
B	DRAFT for Public Review - NYNJHAT Study TSP Plan Set	09.23.22	MK
A	DRAFT for DQC-NYNJHAT Study - TSP Plan Set	08.26.22	MK

U.S. ARMY CORPS OF ENGINEERS
U.S. ARMY ENGINEER DISTRICT
NEW YORK
http://www.nan.usace.army.mil
MOFFATT & NICHOL
529 FIFTH AVE., 14TH FLOOR
NEW YORK, NY 10017
212-768-7454

DESIGNED BY: IK | DATE: 09.09.22
DWN BY: AA | CKD BY: MK | SOLICITATION NO.:
SUBMITTED BY: SA | CONTRACT NO.: 220032-001
PLOT SCALE: ASSIGNED | PLOT DATE: 9/9/2022 | FILE NUMBER:
SIZE: ANSI D | FILE NAME: 220032-CS-122.dgn

NEW YORK - NEW JERSEY HARBOR AND TRIBUTARIES COASTAL STORM RISK TENTATIVELY SELECTED PLAN

SBM - SITE PLAN (22 OF 27)

SHEET ID
CS-122
SHEET 27 OF 88

PRELIMINARY
NOT FOR CONSTRUCTION

SBM - SITE PLAN (23 OF 27)

US Army Corps of Engineers®

MARK	DESCRIPTION	DATE	APPR.
B	DRAFT for Public Review - NY/NJ/HAT Study TSP Plan Set	09.23.22	MK
A	DRAFT for DQC-NY/NJ/HAT Study - TSP Plan Set	08.26.22	MK

U.S. ARMY CORPS OF ENGINEERS
U.S. ARMY ENGINEER DISTRICT
NEW YORK
http://www.nan.usace.army.mil
MOFFATT & NICHOL
529 FIFTH AVE., 14TH FLOOR
NEW YORK, NY 10017
212-768-7454

DESIGNED BY: IK | DATE: 09.09.22
DWN BY: AA | CKD BY: MK | SOLICITATION NO.:
SUBMITTED BY: SA | CONTRACT NO.: 220032-01
PLOT SCALE: AS SHOWN | PLOT DATE: 09/09/2022 | FILE NUMBER:
SIZE: ANSI D | FILE NAME: 220032-CS-123.dgn

NEW YORK - NEW JERSEY HARBOR AND TRIBUTARIES COASTAL STORM RISK TENTATIVELY SELECTED PLAN

SBM - SITE PLAN (23 OF 27)

SHEET ID
CS-123
SHEET 28 OF 88

PATH: \\mne.net\Projects\BA\220032-01\20 CADD_Active_SheetSet\220032-CS-123.dgn
FILE: 220032-CS-123.dgn 9/9/2022 11:03:48 AM tocooper
LAST PLOTTED BY:

PATH: \\mne.net\Projects\BA\220032-01\20 CADD_Active_SheetSet\220032-CS-124.dgn

FILE: 220032-CS-124.dgn 9/9/2022 11:04:05 AM tocooper

LAST PLOTTED BY:

PRELIMINARY
NOT FOR CONSTRUCTION

SBM - SITE PLAN (24 OF 27)

US Army Corps of Engineers®

MARK	DESCRIPTION	DATE	APPR.
B	DRAFT for Public Review - NYNJHAT Study TSP Plan Set	09.23.22	MK
A	DRAFT for DQC-NYNJHAT Study - TSP Plan Set	08.26.22	MK

U.S. ARMY CORPS OF ENGINEERS
U.S. ARMY ENGINEER DISTRICT
NEW YORK
http://www.nan.usace.army.mil
MOFFATT & NICHOL
529 FIFTH AVE., 14TH FLOOR
NEW YORK, NY 10017
212-768-7454

DESIGNED BY: IK
DWN BY: AA
CKD BY: MK
SUBMITTED BY: SA
PLOT SCALE: AS SHOWN
PLOT DATE: 09/09/22
SIZE: ANSI D
FILE NAME: 220032-CS-124.dgn
DATE: 09.09.22
SOLICITATION NO.:
CONTRACT NO.: 220032-001
FILE NUMBER:

NEW YORK - NEW JERSEY HARBOR AND TRIBUTARIES COASTAL STORM RISK TENTATIVELY SELECTED PLAN

SBM - SITE PLAN (24 OF 27)

SHEET ID
CS-124
SHEET 29 OF 88

PRELIMINARY
NOT FOR CONSTRUCTION

SBM - SITE PLAN (25 OF 27)

US Army Corps of Engineers®

MARK	DESCRIPTION	DATE	APPR.
B	DRAFT for Public Review - NYNJHAT Study TSP Plan Set	09.23.22	MK
A	DRAFT for DQC-NYNJHAT Study - TSP Plan Set	08.26.22	MK

U.S. ARMY CORPS OF ENGINEERS
U.S. ARMY ENGINEER DISTRICT
NEW YORK
http://www.nan.usace.army.mil
MOFFATT & NICHOL
529 FIFTH AVE., 14TH FLOOR
NEW YORK, NY 10017
212-768-7454

DESIGNED BY: IK | DATE: 09.09.22
DWN BY: AA | CKD BY: MK | SOLICITATION NO.:
SUBMITTED BY: SA | CONTRACT NO.: 220032-01
PLOT SCALE: ASSIGNED | PLOT DATE: 9/9/2022 | FILE NUMBER:
SIZE: ANSI D | FILE NAME: 220032-CS-125.dgn

NEW YORK - NEW JERSEY HARBOR AND TRIBUTARIES COASTAL STORM RISK TENTATIVELY SELECTED PLAN

SBM - SITE PLAN (25 OF 27)

SHEET ID
CS-125
SHEET 30 OF 88

PATH: \\mne.net\Projects\BA\220032-01\20 CADD_Active_SheetSet\220032-CS-125.dgn
FILE: 220032-CS-125.dgn
9/9/2022 11:04:23 AM tocooper
LAST PLOTTED BY:

PATH: \\mne.net\Projects\BA\220032-01\20 CADD_Active_SheetSet\220032-CS-126.dgn

FILE: 220032-CS-126.dgn

9/9/2022 11:04:39 AM tocooper

LAST PLOTTED BY:

PRELIMINARY
NOT FOR CONSTRUCTION

SBM - SITE PLAN (26 OF 27)

US Army Corps of Engineers®

MARK	DESCRIPTION	DATE	APPR.
B	DRAFT for Public Review - NYNJHAT Study TSP Plan Set	09.23.22	MK
A	DRAFT for DQC-NYNJHAT Study - TSP Plan Set	08.26.22	MK

DESIGNED BY: IK
DWN BY: AA
CKD BY: MK
SUBMITTED BY: SA
PLOT SCALE: AS SHOWN
PLOT DATE: 9/9/2022
SIZE: ANSI D
FILE NAME: 220032-CS-126.dgn
DATE: 09.09.22
SOLICITATION NO.:
CONTRACT NO.: 220032-01
FILE NUMBER:

U.S. ARMY CORPS OF ENGINEERS
U.S. ARMY ENGINEER DISTRICT
NEW YORK
http://www.nan.usace.army.mil

MOFFATT & NICHOL
529 FIFTH AVE., 14TH FLOOR
NEW YORK, NY 10017
212-768-7454

NEW YORK - NEW JERSEY HARBOR AND TRIBUTARIES COASTAL STORM RISK TENTATIVELY SELECTED PLAN

SBM - SITE PLAN (26 OF 27)

SHEET ID
CS-126

SHEET 31 OF 88

PATH: \\mne.net\Projects\BA\220032-01\20 CADD_Active_SheetSet\220032-CS-127.dgn

FILE: 220032-CS-127.dgn

LAST PLOTTED BY: tocooper 11:04:55 AM 9/9/2022

PRELIMINARY
NOT FOR CONSTRUCTION

SBM - SITE PLAN (27 OF 27)

US Army Corps of Engineers®

MARK	DESCRIPTION	DATE	APPR.
B	DRAFT for Public Review - NYNJHAT Study TSP Plan Set	09.23.22	MK
A	DRAFT for DQC-NYNJHAT Study - TSP Plan Set	08.26.22	MK

U.S. ARMY CORPS OF ENGINEERS
U.S. ARMY ENGINEER DISTRICT
NEW YORK
http://www.nan.usace.army.mil

MOFFATT & NICHOL
529 FIFTH AVE., 14TH FLOOR
NEW YORK, NY 10017
212-768-7454

DESIGNED BY: IK | DATE: 09.08.22
DWN BY: AA | CKD BY: MK | SOLICITATION NO.:
SUBMITTED BY: SA | CONTRACT NO.: 220032-01
PLOT SCALE: AS SHOWN | PLOT DATE: 9/9/2022 | FILE NUMBER:
SIZE: ANSI D | FILE NAME: 220032-CS-127.dgn

NEW YORK - NEW JERSEY HARBOR AND TRIBUTARIES COASTAL STORM RISK TENTATIVELY SELECTED PLAN

SBM - SITE PLAN (27 OF 27)

SHEET ID
CS-127

SHEET 32 OF 88

PATH: \\mne.net\Projects\BA\220032-01\20 CADD_Active_SheetSet\220032-CS-150.dgn

FILE: 220032-CS-150.dgn

9/9/2022 11:05:12 AM

LAST PLOTTED BY: tocooper

PRELIMINARY
NOT FOR CONSTRUCTION

RRF - SITE PLAN (1 OF 15)

US Army Corps of Engineers®

MARK	DESCRIPTION	DATE	APPR.
B	DRAFT for Public Review - NY/NJHAT Study TSP Plan Set	09.23.22	MK
A	DRAFT for DQC-NY/NJHAT Study - TSP Plan Set	08.26.22	MK

U.S. ARMY CORPS OF ENGINEERS
U.S. ARMY ENGINEER DISTRICT
NEW YORK
http://www.nan.usace.army.mil
MOFFATT & NICHOL
529 FIFTH AVE., 14TH FLOOR
NEW YORK, NY 10017
212-768-7454

DESIGNED BY: IK
DWN BY: AA
CKD BY: MK
SUBMITTED BY: SA
PLOT SCALE: NOT SHOWN
PLOT DATE: 9/9/2022
SIZE: ANSI D
FILE NAME: 220032-CS-150.dgn
DATE: 09.09.22
SOLICITATION NO.:
CONTRACT NO.: 220032-01
FILE NUMBER:

NEW YORK - NEW JERSEY HARBOR AND TRIBUTARIES COASTAL STORM RISK TENTATIVELY SELECTED PLAN

RRF - SITE PLAN (1 OF 15)

SHEET ID
CS-150
SHEET 33 OF 88

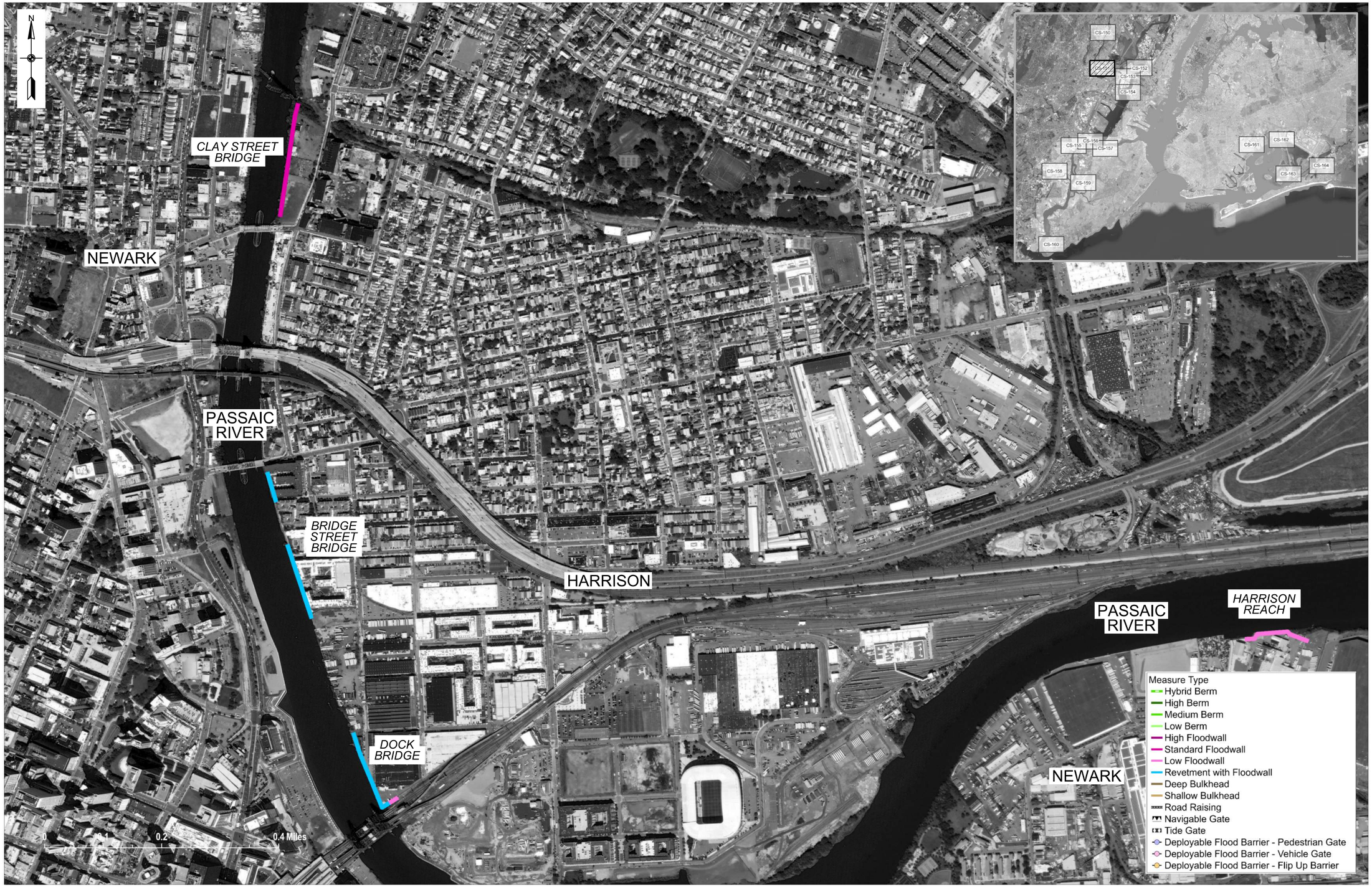

PRELIMINARY
NOT FOR CONSTRUCTION

RRF - SITE PLAN (2 OF 15)

US Army Corps of Engineers®

MARK	DESCRIPTION	DATE	APPR.
B	DRAFT for Public Review - NY/NJ/HAT Study TSP Plan Set	09.23.22	MK
A	DRAFT for DQC-NY/NJ/HAT Study - TSP Plan Set	08.26.22	MK

DATE: 09.09.22
DESIGNED BY: IK
DWN BY: AA
CKD BY: MK
SUBMITTED BY: SA
PLOT SCALE: AS SHOWN
PLOT DATE: 09/09/2022
SIZE: ANSI D
FILE NAME: 220032-CS-151.dgn
SOLICITATION NO.:
CONTRACT NO.: 220032-01
FILE NUMBER:

U.S. ARMY CORPS OF ENGINEERS
U.S. ARMY ENGINEER DISTRICT
NEW YORK
http://www.nan.usace.army.mil
MOFFATT & NICHOL
529 FIFTH AVE., 14TH FLOOR
NEW YORK, NY 10017
212-768-7454

NEW YORK - NEW JERSEY HARBOR AND TRIBUTARIES COASTAL STORM RISK TENTATIVELY SELECTED PLAN

RRF - SITE PLAN (2 OF 15)

SHEET ID
CS-151
SHEET 34 OF 88

PATH: \\mne.net\Projects\BA\220032-01\20 CADD_Active_SheetSet\220032-CS-151.dgn
FILE: 220032-CS-151.dgn
9/9/2022 11:05:33 AM
LAST PLOTTED BY: tocooper

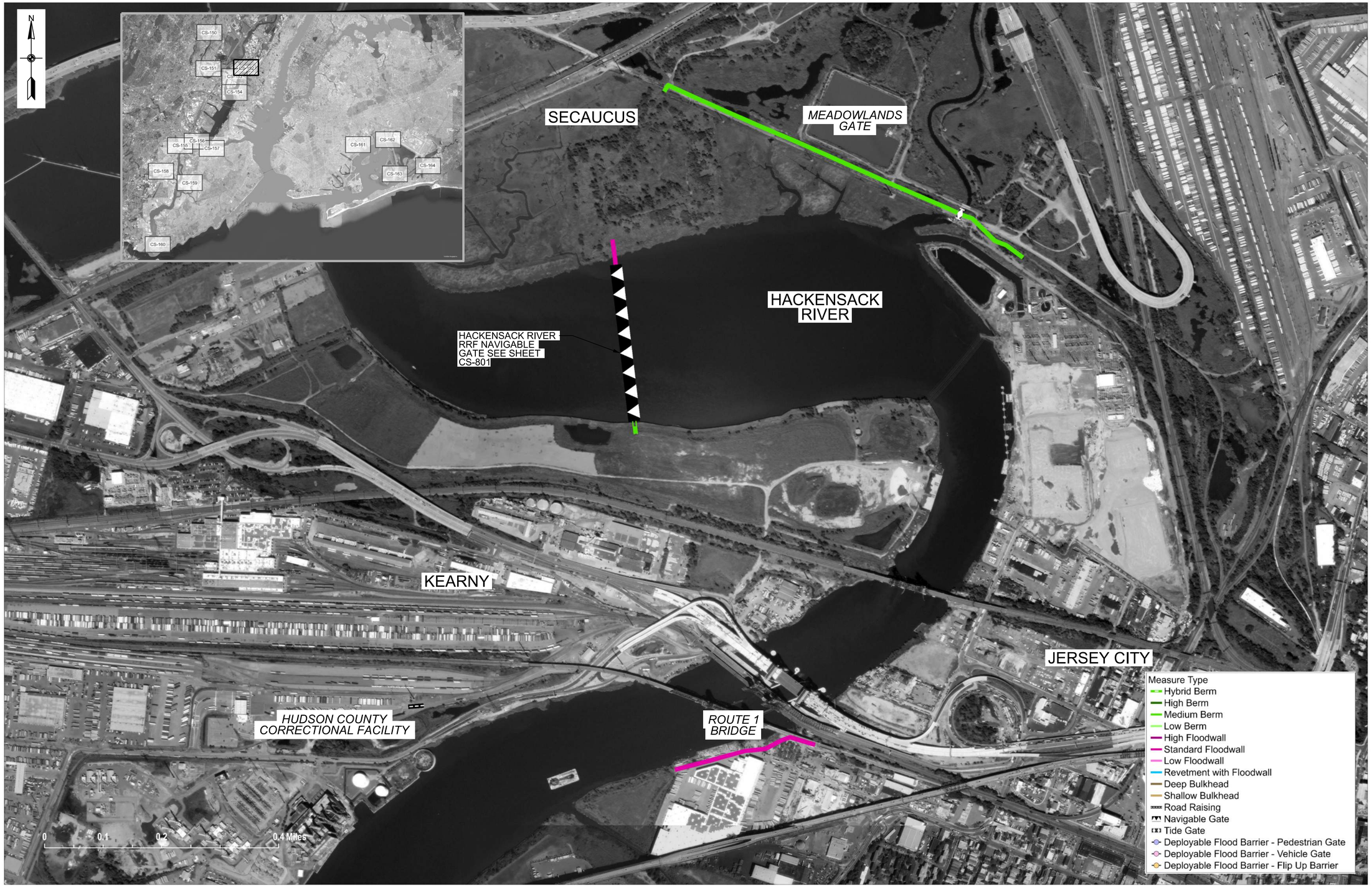

PRELIMINARY
NOT FOR CONSTRUCTION

RRF - SITE PLAN (3 OF 15)

US Army Corps of Engineers®

MARK	DESCRIPTION	DATE	APPR.
B	DRAFT for Public Review - NY/NJHAT Study TSP Plan Set	09.23.22	MK
A	DRAFT for DQC-NY/NJHAT Study - TSP Plan Set	08.26.22	MK

DESIGNED BY: IK
DWN BY: AA
CKD BY: MK
SUBMITTED BY: SA
PLOT SCALE: AS SHOWN
PLOT DATE: 09/09/2022
SIZE: ANSI D
FILE NAME: 220032-CS-152.dgn
DATE: 09.09.22
SOLICITATION NO.:
CONTRACT NO.: 220032-01
FILE NUMBER:

U.S. ARMY CORPS OF ENGINEERS
U.S. ARMY ENGINEER DISTRICT
NEW YORK
http://www.nan.usace.army.mil

MOFFATT & NICHOL
529 FIFTH AVE., 14TH FLOOR
NEW YORK, NY 10017
212-768-7454

NEW YORK - NEW JERSEY HARBOR AND TRIBUTARIES COASTAL STORM RISK TENTATIVELY SELECTED PLAN

RRF - SITE PLAN (3 OF 15)

SHEET ID
CS-152

SHEET 35 OF 88

PATH: \\mne.net\Projects\BA\220032-01\20 CADD_Active_SheetSet\220032-CS-152.dgn
FILE: 220032-CS-152.dgn
9/9/2022 11:05:54 AM
LAST PLOTTED BY: tocooper

PRELIMINARY
NOT FOR CONSTRUCTION

RRF - SITE PLAN (4 OF 15)

US Army Corps of Engineers®

MARK	DESCRIPTION	DATE	APPR.
B	DRAFT for Public Review - NY/NJ/HAT Study TSP Plan Set	09.23.22	MK
A	DRAFT for DQC-NY/NJ/HAT Study - TSP Plan Set	08.26.22	MK

U.S. ARMY CORPS OF ENGINEERS
U.S. ARMY ENGINEER DISTRICT
NEW YORK
http://www.nan.usace.army.mil
MOFFATT & NICHOL
529 FIFTH AVE., 14TH FLOOR
NEW YORK, NY 10017
212-768-7454

DESIGNED BY: IK
DWN BY: AA
CKD BY: MK
SUBMITTED BY: SA
PLOT SCALE: AS SHOWN
PLOT DATE: 9/9/2022
SIZE: ANSI D
FILE NAME: 220032-CS-153.dgn
DATE: 09.09.22
SOLICITATION NO.:
CONTRACT NO.: 220032-01
FILE NUMBER:

NEW YORK - NEW JERSEY HARBOR AND TRIBUTARIES COASTAL STORM RISK TENTATIVELY SELECTED PLAN

RRF - SITE PLAN (4 OF 15)

SHEET ID
CS-153
SHEET 36 OF 88

PATH: \\mne.net\Projects\BA\220032-01\20 CADD_Active_SheetSet\220032-CS-153.dgn
FILE: 220032-CS-153.dgn
9/9/2022 11:06:12 AM
LAST PLOTTED BY: tocooper

PRELIMINARY
NOT FOR CONSTRUCTION

RRF - SITE PLAN (5 OF 15)

US Army Corps of Engineers®

MARK	DESCRIPTION	DATE	APPR.
B	DRAFT for Public Review - NY/NJHAT Study TSP Plan Set	09.23.22	MK
A	DRAFT for DOC-NY/NJHAT Study - TSP Plan Set	08.26.22	MK

DESIGNED BY: IK
DWN BY: AA
CKD BY: MK
SUBMITTED BY: SA
PLOT SCALE: AS SHOWN
PLOT DATE: 9/9/2022
SIZE: ANSI D
FILE NAME: 220032-CS-154.dgn
DATE: 09.09.22
SOLICITATION NO.:
CONTRACT NO.: 220032-01
FILE NUMBER:

U.S. ARMY CORPS OF ENGINEERS
U.S. ARMY ENGINEER DISTRICT
NEW YORK
http://www.nan.usace.army.mil
MOFFATT & NICHOL
529 FIFTH AVE., 14TH FLOOR
NEW YORK, NY 10017
212-768-7454

NEW YORK - NEW JERSEY HARBOR AND TRIBUTARIES COASTAL STORM RISK TENTATIVELY SELECTED PLAN

RRF - SITE PLAN (5 OF 15)

SHEET ID
CS-154

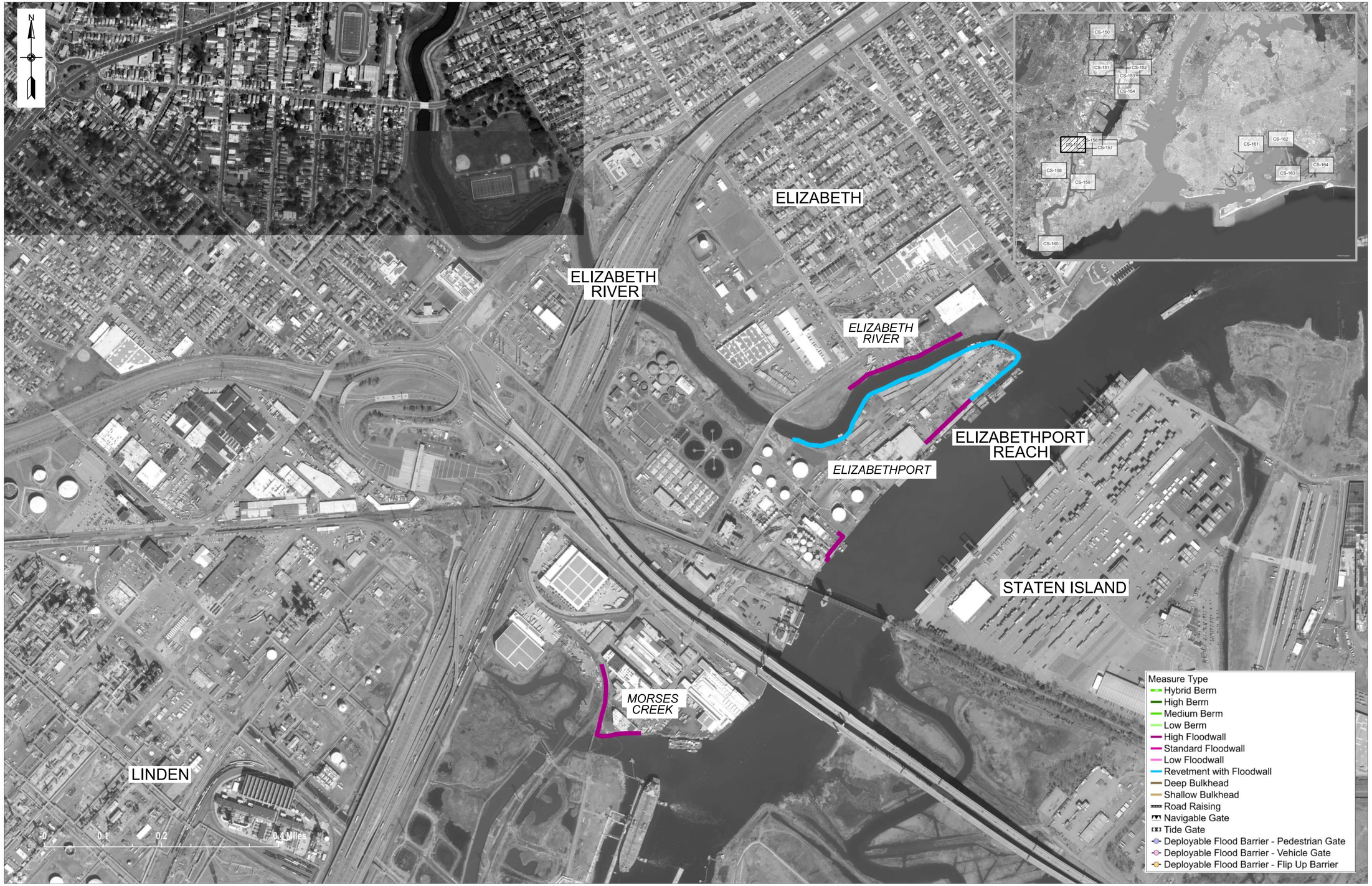

PRELIMINARY
NOT FOR CONSTRUCTION

RRF - SITE PLAN (6 OF 15)

PATH: \\mne.net\Projects\BA\220032-01\20 CADD_Active_SheetSet\220032-CS-155.dgn

FILE: 220032-CS-155.dgn

9/9/2022 11:06:50 AM

LAST PLOTTED BY: tocooper

US Army Corps of Engineers®

MARK	DESCRIPTION	DATE	APPR.
B	DRAFT for Public Review - NYNJHAT Study TSP Plan Set	09.23.22	MK
A	DRAFT for DQC-NYNJHAT Study - TSP Plan Set	08.26.22	MK

U.S. ARMY CORPS OF ENGINEERS
U.S. ARMY ENGINEER DISTRICT
NEW YORK
http://www.nan.usace.army.mil

MOFFATT & NICHOL
529 FIFTH AVE., 14TH FLOOR
NEW YORK, NY 10017
212-768-7454

DESIGNED BY: IK
DWN BY: AA
CKD BY: MK
SUBMITTED BY: SA
PLOT SCALE: AS SHOWN
PLOT DATE: 9/9/2022
SIZE: ANSI D
FILE NAME: 220032-CS-155.dgn
DATE: 09.09.22
SOLICITATION NO.:
CONTRACT NO.: 220032-01
FILE NUMBER:

NEW YORK - NEW JERSEY HARBOR AND TRIBUTARIES COASTAL STORM RISK TENTATIVELY SELECTED PLAN

RRF - SITE PLAN (6 OF 15)

SHEET ID
CS-155
SHEET 38 OF 88

PATH: \\mne.net\Projects\BA\220032-01\20 CADD_Active_SheetSet\220032-CS-156.dgn

FILE: 220032-CS-156.dgn

9/9/2022 11:07:10 AM

LAST PLOTTED BY: tocooper

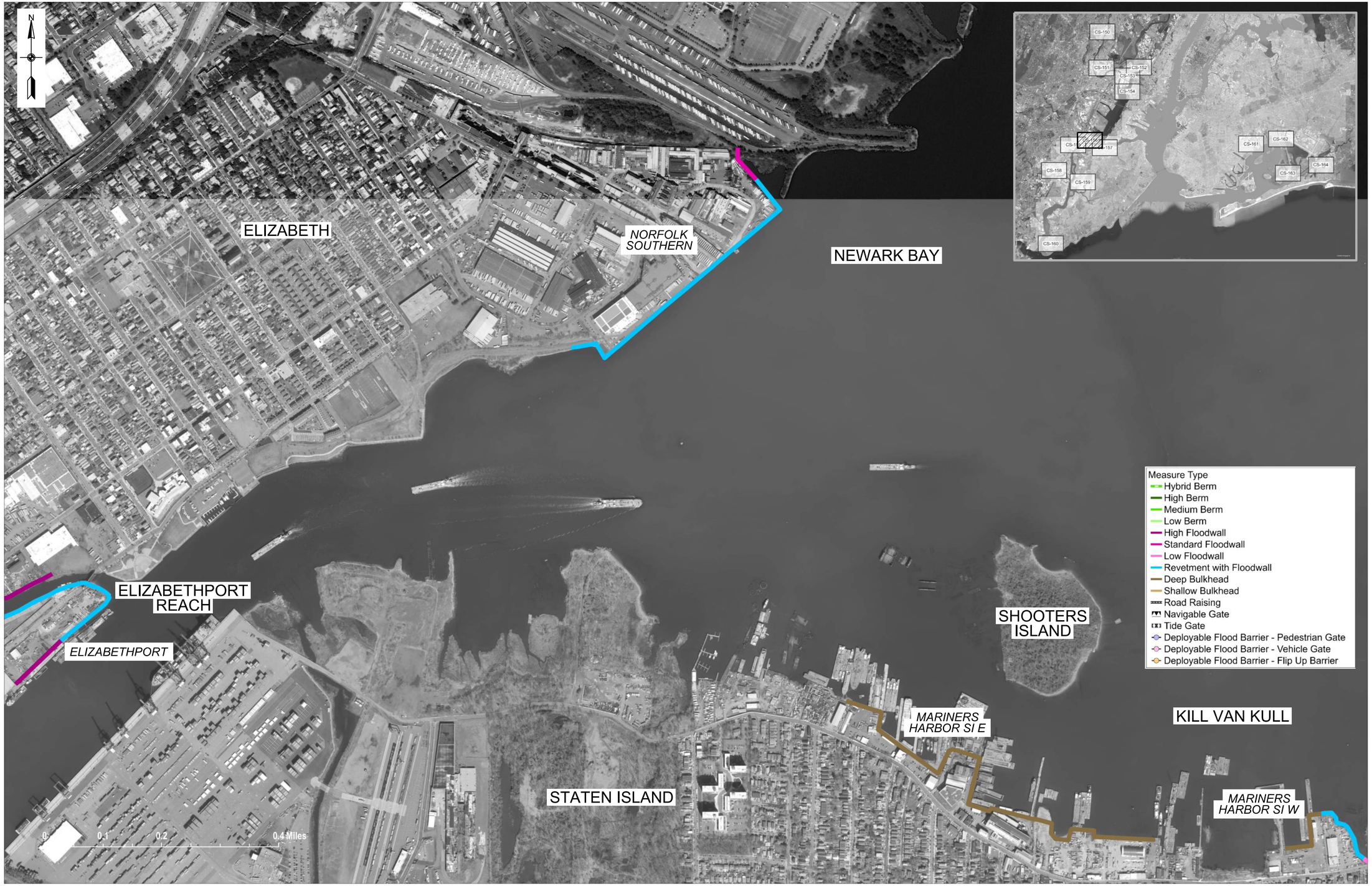

PRELIMINARY
NOT FOR CONSTRUCTION

RRF - SITE PLAN (7 OF 15)

US Army Corps of Engineers®

MARK	DESCRIPTION	DATE	APPR.
B	DRAFT for Public Review - NY/NJHAT Study TSP Plan Set	09.23.22	MK
A	DRAFT for DOC-NY/NJHAT Study - TSP Plan Set	08.26.22	MK

DESIGNED BY: IK
DWN BY: AA
CKD BY: MK
SUBMITTED BY: SA
PLOT SCALE: AS SHOWN
PLOT DATE: 9/9/2022
SIZE: ANSI D
FILE NAME: 220032-CS-156.dgn
DATE: 09.09.22
SOLICITATION NO.:
CONTRACT NO.: 220032-01
FILE NUMBER:

U.S. ARMY CORPS OF ENGINEERS
U.S. ARMY ENGINEER DISTRICT
NEW YORK
http://www.nan.usace.army.mil

MOFFATT & NICHOL
529 FIFTH AVE., 14TH FLOOR
NEW YORK, NY 10017
212-768-7454

NEW YORK - NEW JERSEY HARBOR AND TRIBUTARIES COASTAL STORM RISK TENTATIVELY SELECTED PLAN

RRF - SITE PLAN (7 OF 15)

SHEET ID
CS-156

SHEET 39 OF 88

PRELIMINARY
NOT FOR CONSTRUCTION

RRF - SITE PLAN (8 OF 15)

US Army Corps of Engineers®

MARK	DESCRIPTION	DATE	APPR.
B	DRAFT for Public Review - NY/NJ/HAT Study TSP Plan Set	09.23.22	MK
A	DRAFT for DQC-NY/NJ/HAT Study - TSP Plan Set	08.26.22	MK

DESIGNED BY: IK
DWN BY: AA
CKD BY: MK
SUBMITTED BY: SA
PLOT SCALE: AS SHOWN
PLOT DATE: 9/9/2022
SIZE: ANSI D
FILE NAME: 220032-CS-157.dgn
DATE: 09.09.22
SOLICITATION NO.:
CONTRACT NO.: 220032-01
FILE NUMBER:

U.S. ARMY CORPS OF ENGINEERS
U.S. ARMY ENGINEER DISTRICT
NEW YORK
http://www.nan.usace.army.mil
MOFFATT & NICHOL
529 FIFTH AVE., 14TH FLOOR
NEW YORK, NY 10017
212-768-7454

NEW YORK - NEW JERSEY HARBOR AND TRIBUTARIES COASTAL STORM RISK TENTATIVELY SELECTED PLAN

RRF - SITE PLAN (8 OF 15)

SHEET ID
CS-157
SHEET 40 OF 88

PATH: \\mne.net\Projects\BA\220032-01\20 CADD_Active_SheetSet\220032-CS-157.dgn
FILE: 220032-CS-157.dgn
9/9/2022 11:07:26 AM
LAST PLOTTED BY: tocooper

PATH: \\mne.net\Projects\BA\220032-01\20 CADD_Active_SheetSet\220032-CS-158.dgn

FILE: 220032-CS-158.dgn

9/9/2022 11:07:44 AM

LAST PLOTTED BY: tocooper

PRELIMINARY
NOT FOR CONSTRUCTION

RRF - SITE PLAN (9 OF 15)

US Army Corps of Engineers®

MARK	DESCRIPTION	DATE	APPR.
B	DRAFT for Public Review - NYNJHAT Study TSP Plan Set	09.23.22	MK
A	DRAFT for DQC-NYNJHAT Study - TSP Plan Set	08.26.22	MK

DATE: 09.09.22
SOLICITATION NO.:
CONTRACT NO.: 220032-01
FILE NUMBER:

DESIGNED BY: IK
DWN BY: AA
CKD BY: MK
SUBMITTED BY: SA
PLOT SCALE: AS SHOWN
PLOT DATE: 9/9/2022
SIZE: ANSI D
FILE NAME: 220032-CS-158.dgn

U.S. ARMY CORPS OF ENGINEERS
U.S. ARMY ENGINEER DISTRICT
NEW YORK
http://www.nan.usace.army.mil

MOFFATT & NICHOL
529 FIFTH AVE., 14TH FLOOR
NEW YORK, NY 10017
212-768-7454

NEW YORK - NEW JERSEY HARBOR AND TRIBUTARIES COASTAL STORM RISK TENTATIVELY SELECTED PLAN

RRF - SITE PLAN (9 OF 15)

SHEET ID
CS-158

SHEET 41 OF 88

PRELIMINARY
NOT FOR CONSTRUCTION

RRF - SITE PLAN (10 OF 15)

US Army Corps of Engineers®

MARK	DESCRIPTION	DATE	APPR.
B	DRAFT for Public Review - NY/NJ/HAT Study TSP Plan Set	09.23.22	MK
A	DRAFT for DOC-NY/NJ/HAT Study - TSP Plan Set	08.26.22	MK

U.S. ARMY CORPS OF ENGINEERS
U.S. ARMY ENGINEER DISTRICT
NEW YORK
http://www.nan.usace.army.mil
MOFFATT & NICHOL
529 FIFTH AVE., 14TH FLOOR
NEW YORK, NY 10017
212-768-7454

DESIGNED BY: IK | DATE: 09.09.22
DWN BY: AA | CKD BY: MK | SOLICITATION NO.:
SUBMITTED BY: SA | CONTRACT NO.: 220032-01
PLOT SCALE: AS SHOWN | PLOT DATE: 09/09/2022 | FILE NUMBER:
SIZE: ANSI D | FILE NAME: 220032-CS-159.dgn

NEW YORK - NEW JERSEY HARBOR AND TRIBUTARIES COASTAL STORM RISK TENTATIVELY SELECTED PLAN

RRF - SITE PLAN (10 OF 15)

SHEET ID
CS-159
SHEET 42 OF 88

PATH: \\mne.net\Projects\BA\220032-01\20 CADD_Active_SheetSet\220032-CS-159.dgn
FILE: 220032-CS-159.dgn
9/9/2022 11:08:03 AM
LAST PLOTTED BY: tocooper

PRELIMINARY
NOT FOR CONSTRUCTION

RRF - SITE PLAN (11 OF 15)

US Army Corps of Engineers®

MARK	DESCRIPTION	DATE	APPR.
B	DRAFT for Public Review - NYNJHAT Study TSP Plan Set	09.23.22	MK
A	DRAFT for DQC-NYNJHAT Study - TSP Plan Set	08.26.22	MK

U.S. ARMY CORPS OF ENGINEERS
U.S. ARMY ENGINEER DISTRICT
NEW YORK
http://www.nan.usace.army.mil

MOFFATT & NICHOL
529 FIFTH AVE., 14TH FLOOR
NEW YORK, NY 10017
212-768-7454

DESIGNED BY: IK
DWN BY: AA
CKD BY: MK
SUBMITTED BY: SA
PLOT SCALE: AS SHOWN
PLOT DATE: 9/9/2022
SIZE: ANSI D
FILE NAME: 220032-CS-160.dgn
DATE: 09.09.22
SOLICITATION NO.:
CONTRACT NO.: 220032-001
FILE NUMBER:

NEW YORK - NEW JERSEY HARBOR AND TRIBUTARIES COASTAL STORM RISK TENTATIVELY SELECTED PLAN

RRF - SITE PLAN (11 OF 15)

SHEET ID
CS-160
SHEET 43 OF 88

PATH: \\mne.net\Projects\BA\220032-01\20 CADD_Active_SheetSet\220032-CS-160.dgn
FILE: 220032-CS-160.dgn
9/9/2022 11:08:23 AM tocooper
LAST PLOTTED BY:

PATH: \\mne.net\Projects\BA\220032-01\20 CADD_Active_SheetSet\220032-CS-161.dgn

FILE: 220032-CS-161.dgn

9/9/2022 11:08:41 AM tocooper

LAST PLOTTED BY:

PRELIMINARY
NOT FOR CONSTRUCTION

RRF - SITE PLAN (12 OF 15)

US Army Corps of Engineers®

MARK	DESCRIPTION	DATE	APPR.
B	DRAFT for Public Review - NYNJHAT Study TSP Plan Set	09.23.22	MK
A	DRAFT for DQC-NYNJHAT Study - TSP Plan Set	08.26.22	MK

U.S. ARMY CORPS OF ENGINEERS
U.S. ARMY ENGINEER DISTRICT
NEW YORK
http://www.nan.usace.army.mil

MOFFATT & NICHOL
529 FIFTH AVE., 14TH FLOOR
NEW YORK, NY 10017
212-768-7454

DESIGNED BY: IK
DWN BY: AA
CKD BY: MK
SUBMITTED BY: SA
PLOT SCALE: AS SHOWN
PLOT DATE: 9/9/2022
DATE: 09.09.22
SOLICITATION NO.:
CONTRACT NO.: 220032-01
FILE NUMBER:
SIZE: ANSI D
FILE NAME: 220032-CS-161.dgn

NEW YORK - NEW JERSEY HARBOR AND TRIBUTARIES COASTAL STORM RISK TENTATIVELY SELECTED PLAN

RRF - SITE PLAN (12 OF 15)

SHEET ID
CS-161

SHEET 44 OF 88

PRELIMINARY
NOT FOR CONSTRUCTION

RRF - SITE PLAN (13 OF 15)

US Army Corps of Engineers®

MARK	DESCRIPTION	DATE	APPR.
B	DRAFT for Public Review - NYNJHAT Study TSP Plan Set	09.23.22	MK
A	DRAFT for DQC-NYNJHAT Study - TSP Plan Set	08.26.22	MK

U.S. ARMY CORPS OF ENGINEERS
U.S. ARMY ENGINEER DISTRICT
NEW YORK
http://www.nan.usace.army.mil
MOFFATT & NICHOL
529 FIFTH AVE., 14TH FLOOR
NEW YORK, NY 10017
212-768-7454

DESIGNED BY: IK | DATE: 09.09.22
DWN BY: AA | CKD BY: MK | SOLICITATION NO.:
SUBMITTED BY: SA | CONTRACT NO.: 220032-01
PLOT SCALE: AS SHOWN | PLOT DATE: AS SHOWN | FILE NUMBER:
SIZE: ANSI D | FILE NAME: 220032-CS-162.dgn

NEW YORK - NEW JERSEY HARBOR AND TRIBUTARIES COASTAL STORM RISK TENTATIVELY SELECTED PLAN

RRF - SITE PLAN (13 OF 15)

SHEET ID
CS-162

SHEET 45 OF 88

PATH: \\mne.net\Projects\BA\220032-01\20 CADD_Active_SheetSet\220032-CS-162.dgn
FILE: 220032-CS-162.dgn
9/9/2022 11:09:02 AM
LAST PLOTTED BY: tocooper

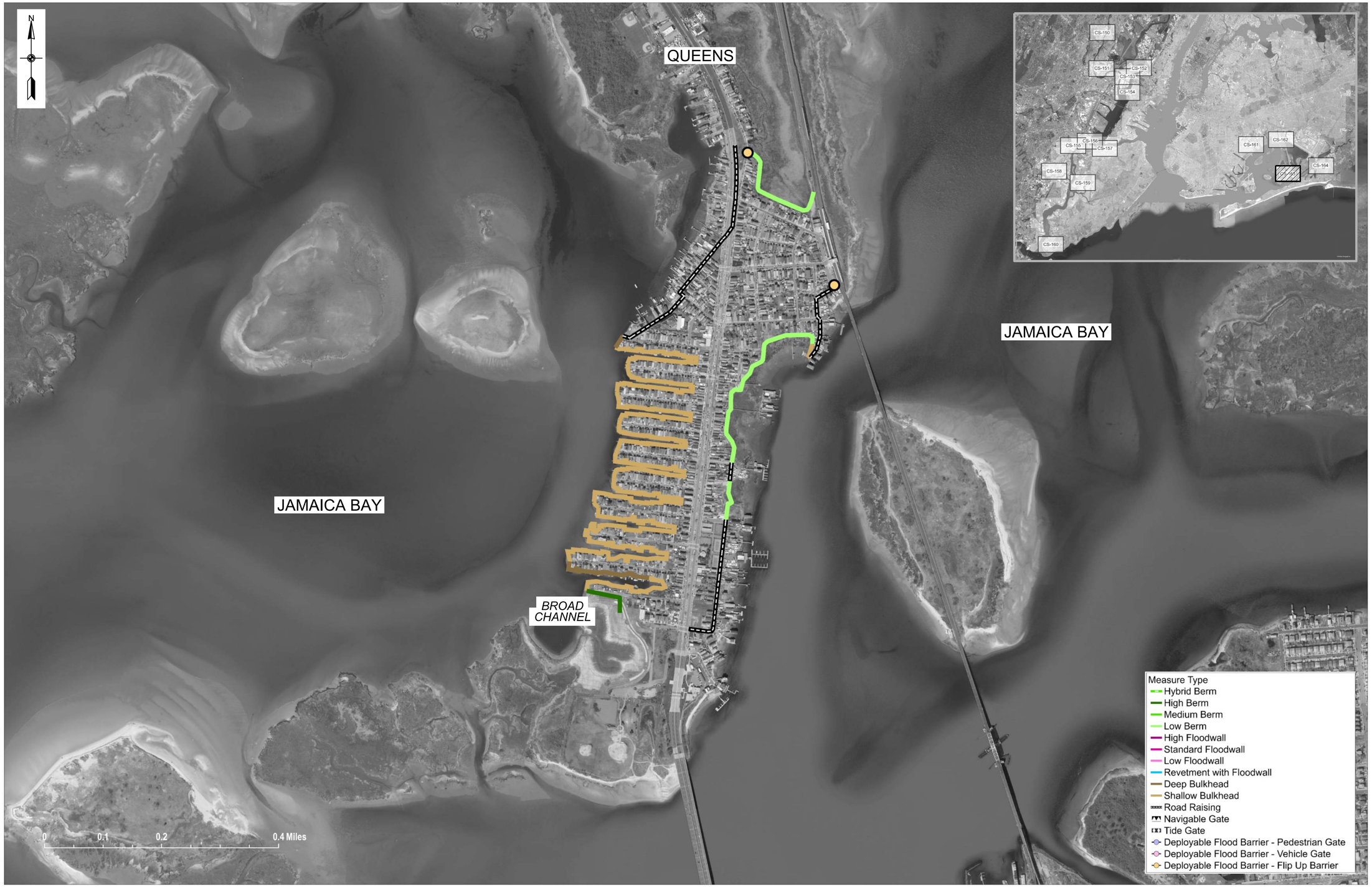

PRELIMINARY
NOT FOR CONSTRUCTION

RRF - SITE PLAN (14 OF 15)

US Army Corps of Engineers®

MARK	DESCRIPTION	DATE	APPR.
B	DRAFT for Public Review - NYNJHAT Study TSP Plan Set	09.23.22	MK
A	DRAFT for DQC-NYNJHAT Study - TSP Plan Set	08.26.22	MK

U.S. ARMY CORPS OF ENGINEERS
U.S. ARMY ENGINEER DISTRICT
NEW YORK
http://www.nan.usace.army.mil

MOFFATT & NICHOL
529 FIFTH AVE., 14TH FLOOR
NEW YORK, NY 10017
212-768-7454

DESIGNED BY: IK | DATE: 09.09.22
DWN BY: AA | CKD BY: MK | SOLICITATION NO.:
SUBMITTED BY: SA | CONTRACT NO.: 22002-01
PLOT SCALE: AS SHOWN | PLOT DATE: 9/9/2022 | FILE NUMBER:
SIZE: ANSI D | FILE NAME: 220032-CS-163.dgn

NEW YORK - NEW JERSEY HARBOR AND TRIBUTARIES COASTAL STORM RISK TENTATIVELY SELECTED PLAN

RRF - SITE PLAN (14 OF 15)

SHEET ID
CS-163
SHEET 46 OF 88

PATH: \\mne.net\Projects\BA\220032-01\20 CADD_Active_SheetSet\220032-CS-163.dgn
FILE: 220032-CS-163.dgn
9/9/2022 11:09:18 AM
LAST PLOTTED BY: tocooper

PATH: \\mne.net\Projects\BA\220032-01\20 CADD_Active_SheetSet\220032-CS-164.dgn

FILE: 220032-CS-164.dgn

9/9/2022 11:09:33 AM tocooper

LAST PLOTTED BY:

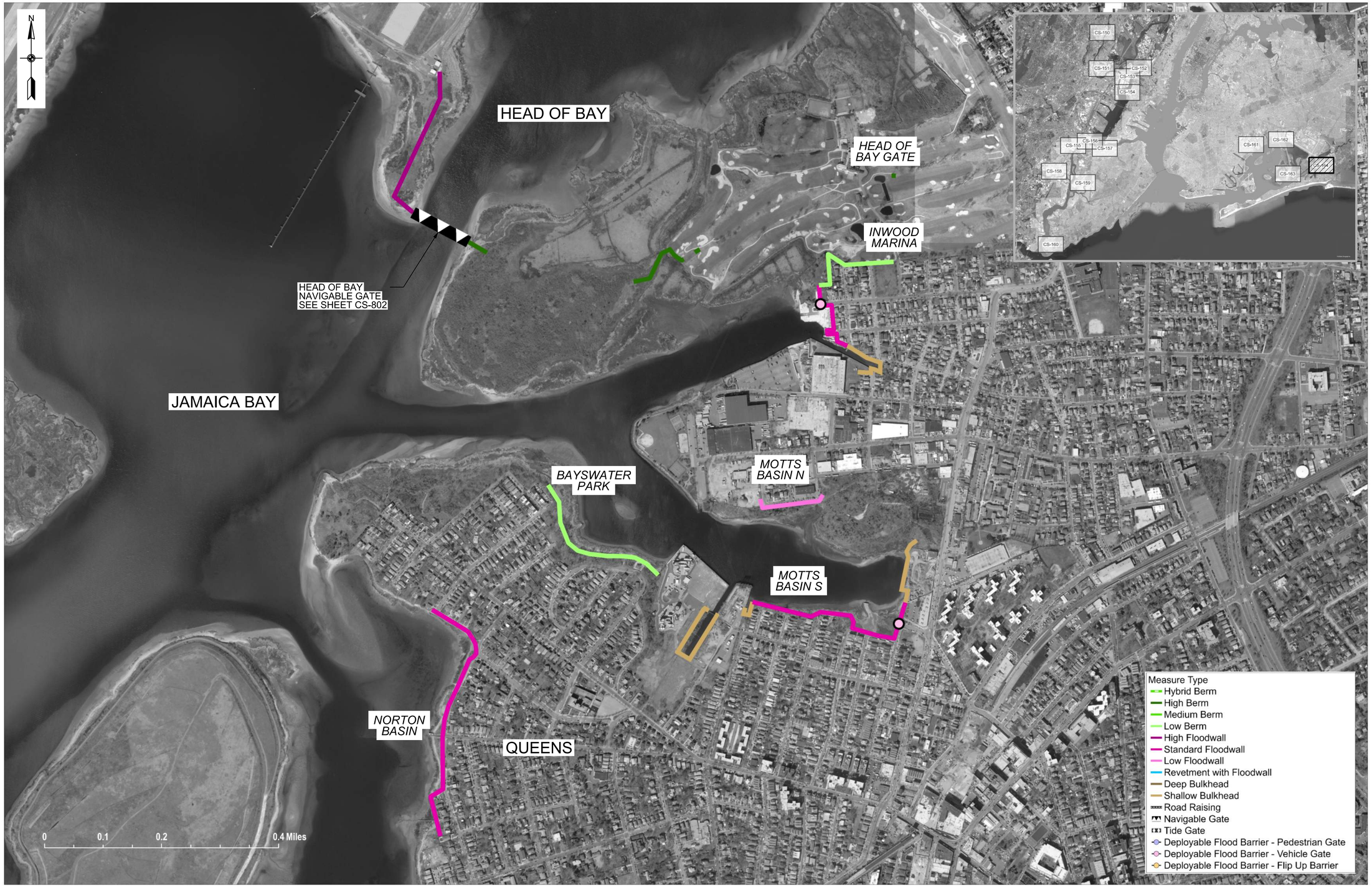

PRELIMINARY
NOT FOR CONSTRUCTION

RRF - SITE PLAN (15 OF 15)

US Army Corps of Engineers®

MARK	DESCRIPTION	DATE	APPR.
B	DRAFT for Public Review - NY/NJHAT Study TSP Plan Set	09.23.22	MK
A	DRAFT for DQC-NY/NJHAT Study - TSP Plan Set	08.26.22	MK

U.S. ARMY CORPS OF ENGINEERS
U.S. ARMY ENGINEER DISTRICT
NEW YORK
http://www.nan.usace.army.mil

MOFFATT & NICHOL
529 FIFTH AVE., 14TH FLOOR
NEW YORK, NY 10017
212-768-7454

DESIGNED BY: IK | DWN BY: AA | CKD BY: MK | SUBMITTED BY: SA | PLOT SCALE: AS SHOWN | PLOT DATE: 09/09/2022 | SIZE: ANSI D | FILE NAME: 220032-CS-164.dgn | DATE: 09.09.22 | SOLICITATION NO.: | CONTRACT NO.: 220032-01 | FILE NUMBER:

NEW YORK - NEW JERSEY HARBOR AND TRIBUTARIES COASTAL STORM RISK TENTATIVELY SELECTED PLAN

RRF - SITE PLAN (15 OF 15)

SHEET ID
CS-164

SHEET 47 OF 88

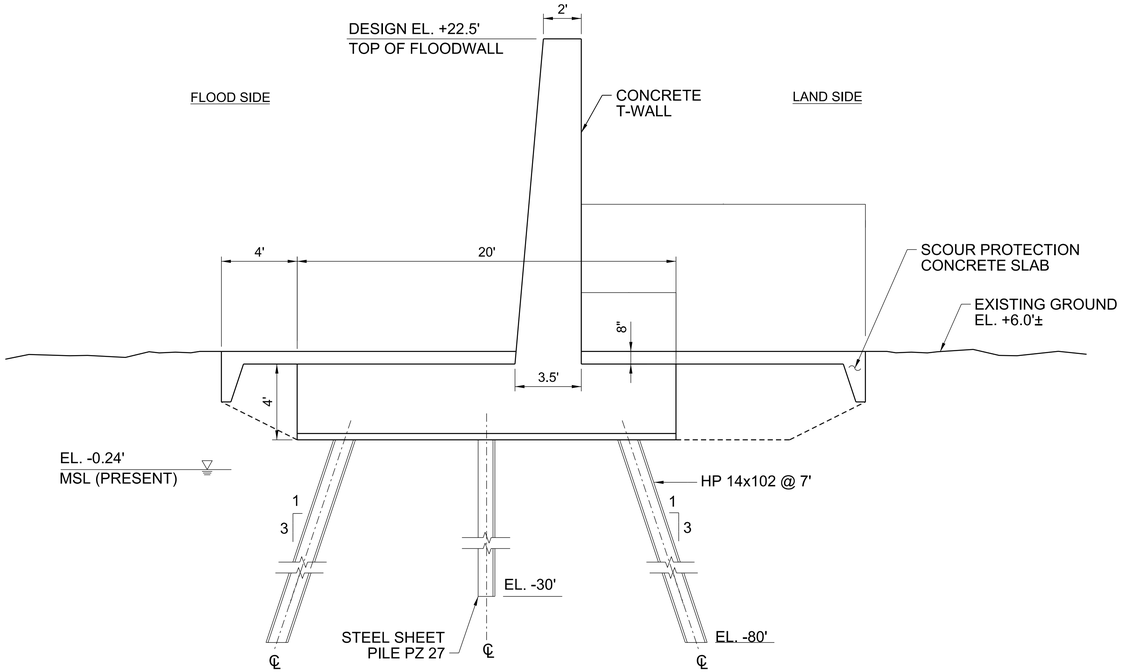

C1 CS-401 EXTRA LARGE FLOODWALL
SCALE: 1/4" = 1'-0"

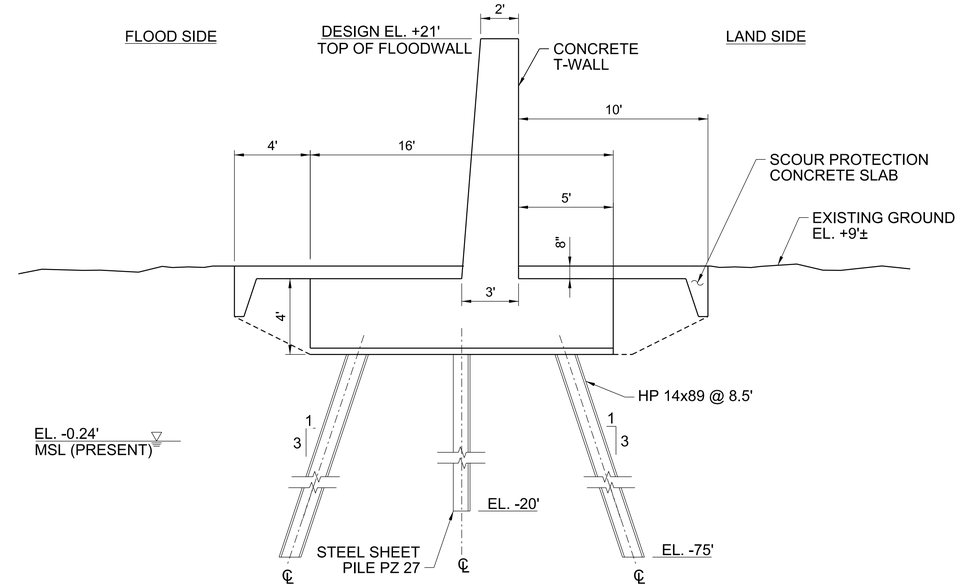

C4 CS-401 LARGE FLOODWALL
SCALE: 1/4" = 1'-0"

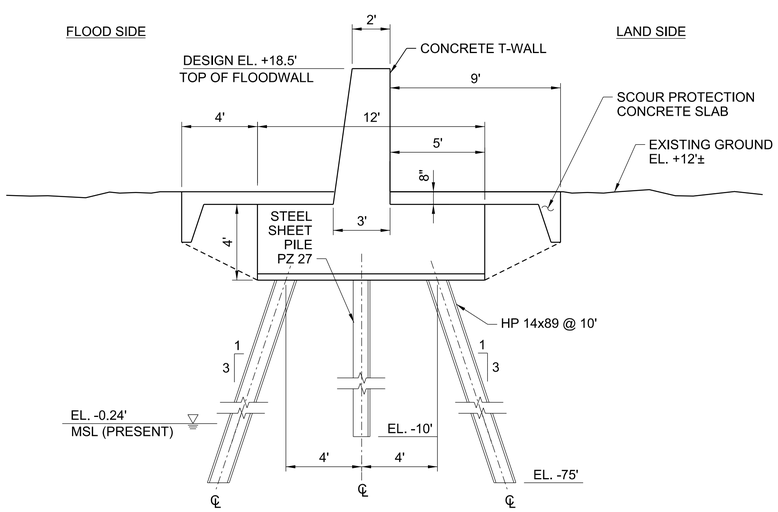

B1 CS-401 MEDIUM FLOODWALL
SCALE: 1/4" = 1'-0"

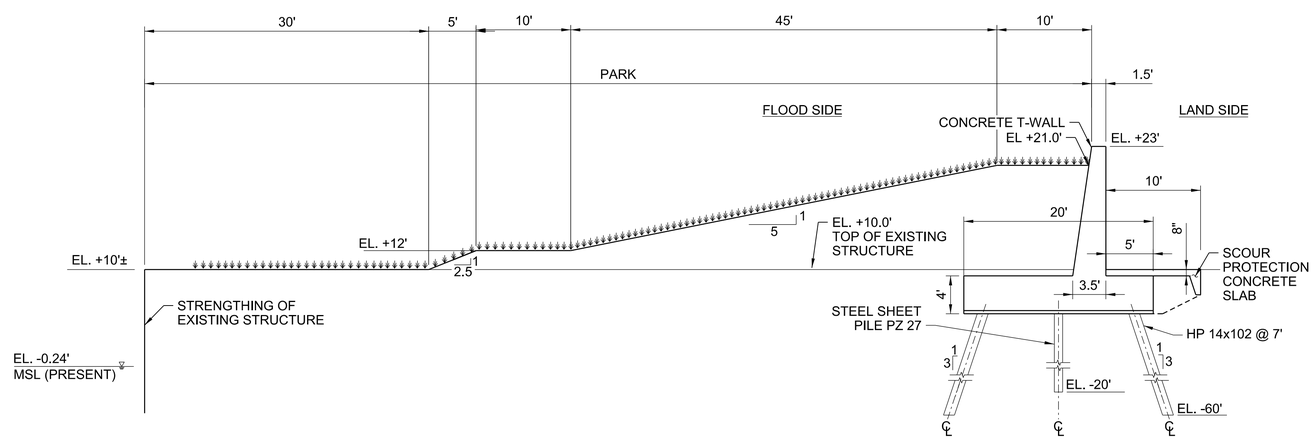

B3 CS-401 FLOODWALL WITH PARK INTEGRATION
SCALE: 1/8" = 1'-0"

PRELIMINARY
NOT FOR CONSTRUCTION

PATH: Q:\BA\220032-01\20 CADD_Active_SheetSet\220032-CS-401.dgn
FILE: 220032-CS-401.dgn
9/9/2022 11:43:19 AM
LAST PLOTTED BY: tocooper

US Army Corps of Engineers®

MARK	DESCRIPTION	DATE	APPR.
B	DRAFT for Public Review - NYNJHAT Study TSP Plan Set	09.23.22	MK
A	DRAFT for DOC-NYNJHAT Study - TSP Plan Set	08.26.22	MK

DESIGNED BY: JK
DWN BY: TC
CKD BY: MK
SUBMITTED BY: SA
PLOT SCALE: AS SHOWN
PLOT DATE: 9/9/2022
SIZE: ANSI D
FILE NAME: 220032-CS-401.dgn
DATE: 09/08/22
SOLICITATION NO.:
CONTRACT NO.: 220032-01
FILE NUMBER:

U.S. ARMY CORPS OF ENGINEERS
U.S. ARMY ENGINEER DISTRICT
NEW YORK
http://www.nan.usace.army.mil

MOFFATT & NICHOL
529 FIFTH AVE., 14TH FLOOR
NEW YORK, NY 10017
212-768-7454

NEW YORK - NEW JERSEY HARBOR AND TRIBUTARIES COASTAL STORM RISK TENTATIVELY SELECTED PLAN

SBM - FLOODWALL SECTIONS

SHEET ID
CS-401

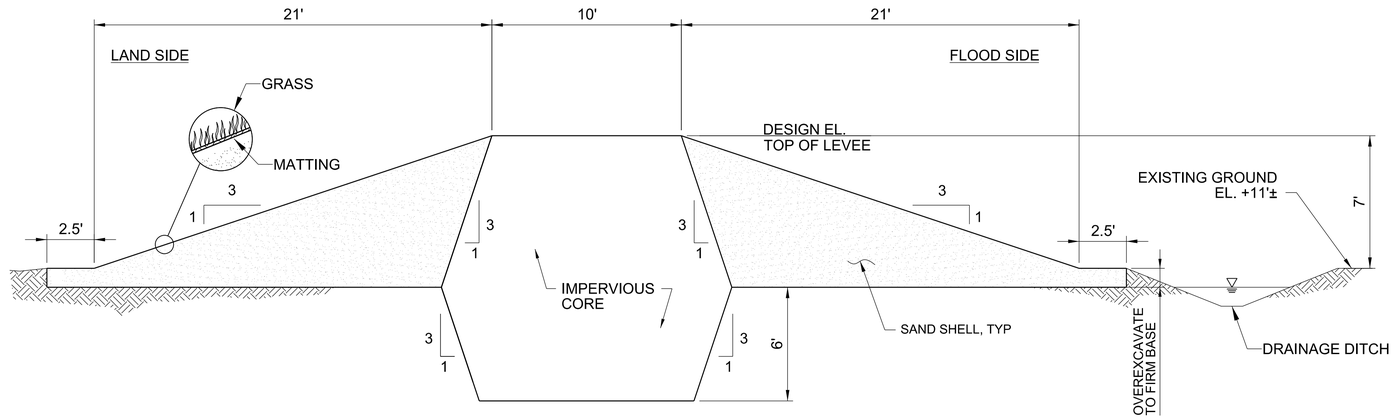

EL. -0.24'
MSL (PRESENT)

C2 / CS-402 MEDIUM LEVEE
SCALE: 1/4" = 1'-0"

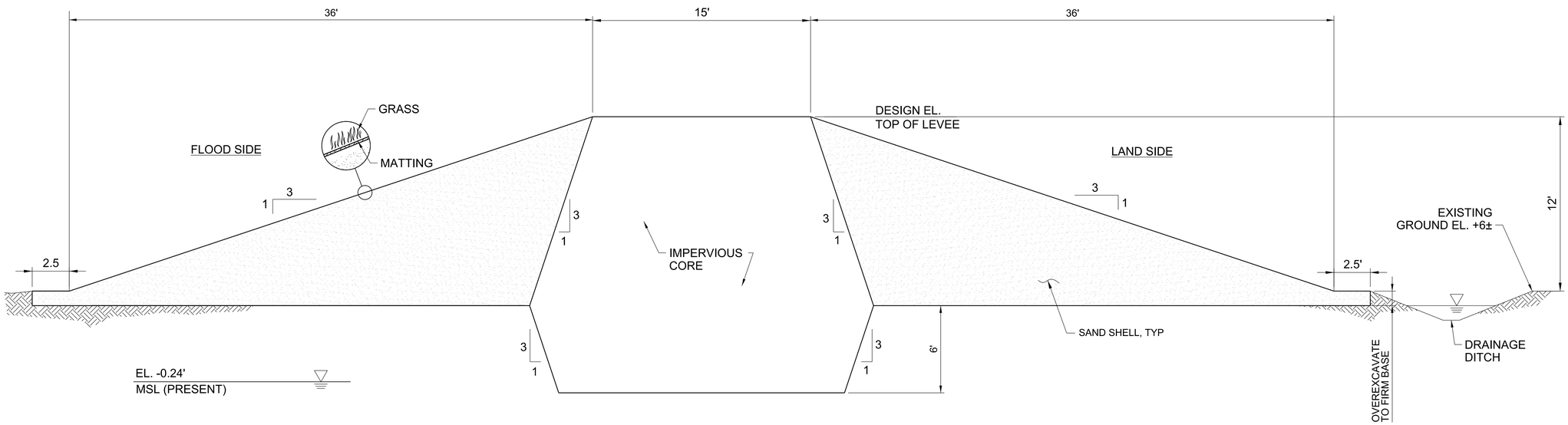

EL. -0.24'
MSL (PRESENT)

B1 / CS-402 LARGE LEVEE
SCALE: 1/4" = 1'-0"

PRELIMINARY
NOT FOR CONSTRUCTION

US Army Corps of Engineers®

MARK	DESCRIPTION	DATE	APPR.
B	DRAFT for Public Review - NYNJHAT Study TSP Plan Set	09.23.22	MK
A	DRAFT for DOC-NYNJHAT Study - TSP Plan Set	08.26.22	MK

DESIGNED BY: JK
DWN BY: TC
CKD BY: MK
SUBMITTED BY: SA
PLOT SCALE: AS SHOWN
PLOT DATE: 9/9/2022
SIZE: ANSI D
FILE NAME: 220032-CS-402.dgn
DATE: 09/08/22
SOLICITATION NO.:
CONTRACT NO.: 220032-01
FILE NUMBER:

U.S. ARMY CORPS OF ENGINEERS
U.S. ARMY ENGINEER DISTRICT
NEW YORK
http://www.nan.usace.army.mil
MOFFATT & NICHOL
529 FIFTH AVE., 14TH FLOOR
NEW YORK, NY 10017
212-768-7454

NEW YORK - NEW JERSEY HARBOR AND TRIBUTARIES COASTAL STORM RISK TENTATIVELY SELECTED PLAN

SBM - LEVEE SECTIONS

SHEET ID
CS-402
SHEET 49 OF 88

PATH: Q:\BA\220032-01\20 CADD_Active_SheetSet\220032-CS-402.dgn
FILE: 220032-CS-402.dgn
9/9/2022 11:43:20 AM tocooper
LAST PLOTTED BY:

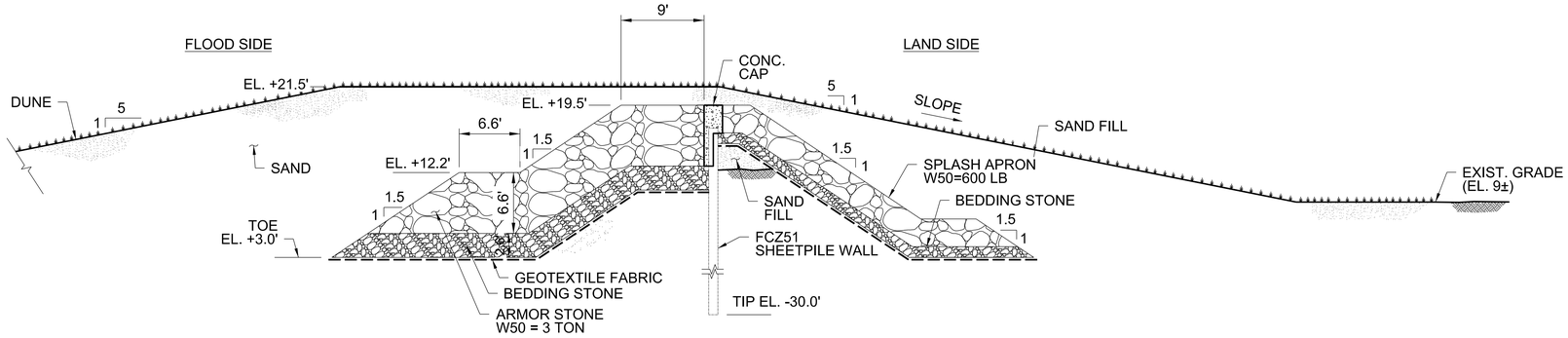

D1 CS-403 REINFORCED DUNE - NATURAL DUNE COVER

SCALE: 1/8" = 1'-0"

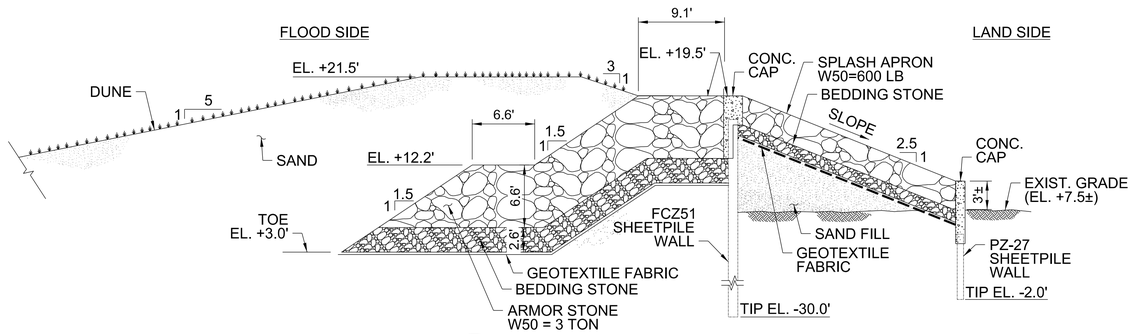

B1 CS-403 REINFORCED DUNE - PARTIAL DUNE COVER

SCALE: 1/8" = 1'-0"

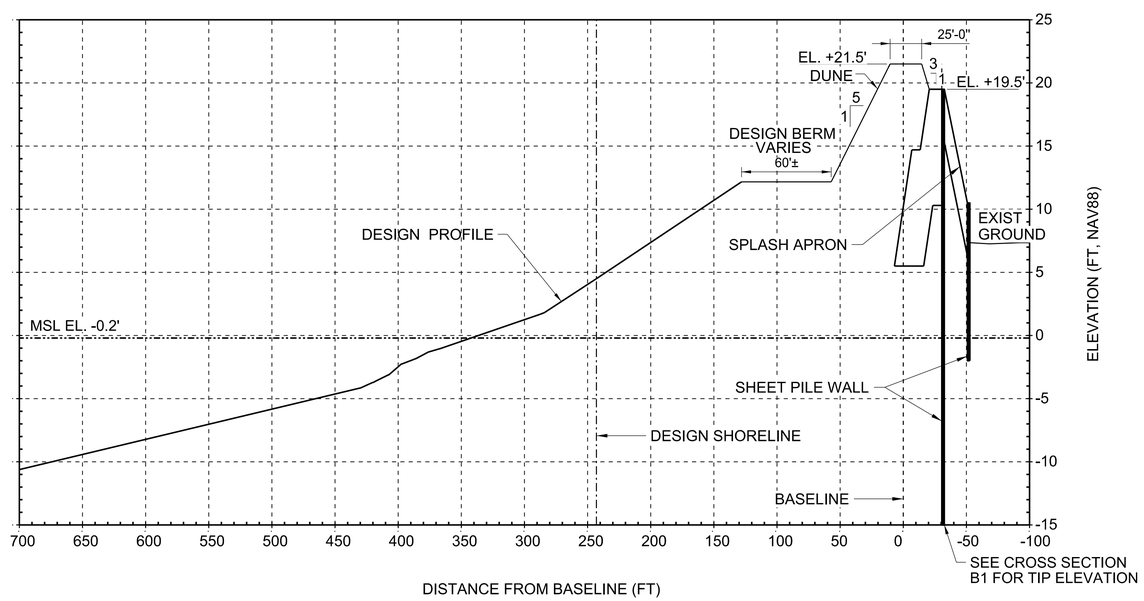

A1 CS-403 TYPICAL BEACH FILL SECTION AT REINFORCED DUNE - PARTIAL DUNE COVER

SCALE HORZ: 1" = 50'
SCALE VERT: 1" = 5'

PRELIMINARY
NOT FOR CONSTRUCTION

US Army Corps of Engineers®

MARK	DESCRIPTION	DATE	APPR.
B	DRAFT for Public Review - NYNJHAT Study TSP Plan Set	09.23.22	MK
A	DRAFT for DOC-NYNJHAT Study - TSP Plan Set	08.26.22	MK

DESIGNED BY: IK
DWN BY: TC
CKD BY: MK
SUBMITTED BY: SA
PLOT SCALE: AS SHOWN
PLOT DATE: 9/9/2022
SIZE: ANSI D
FILE NAME: 220032-CS-403.dgn
DATE: 09/08/22
SOLICITATION NO.:
CONTRACT NO.: 220032-01
FILE NUMBER:

U.S. ARMY CORPS OF ENGINEERS
U.S. ARMY ENGINEER DISTRICT
NEW YORK
http://www.nan.usace.army.mil
MOFFATT & NICHOL
529 FIFTH AVE., 14TH FLOOR
NEW YORK, NY 10017
212-768-7454

NEW YORK - NEW JERSEY HARBOR AND TRIBUTARIES COASTAL STORM RISK TENTATIVELY SELECTED PLAN

SBM - COMPOSITE SEAWALL WITH BEACH AND DUNE SECTIONS

SHEET ID
CS-403
SHEET 50 OF 88

PATH: Q:\BA\220032-01\20 CADD_Active_SheetSet\220032-CS-403.dgn
FILE: 220032-CS-403.dgn
9/9/2022 11:43:21 AM
LAST PLOTTED BY: tocooper

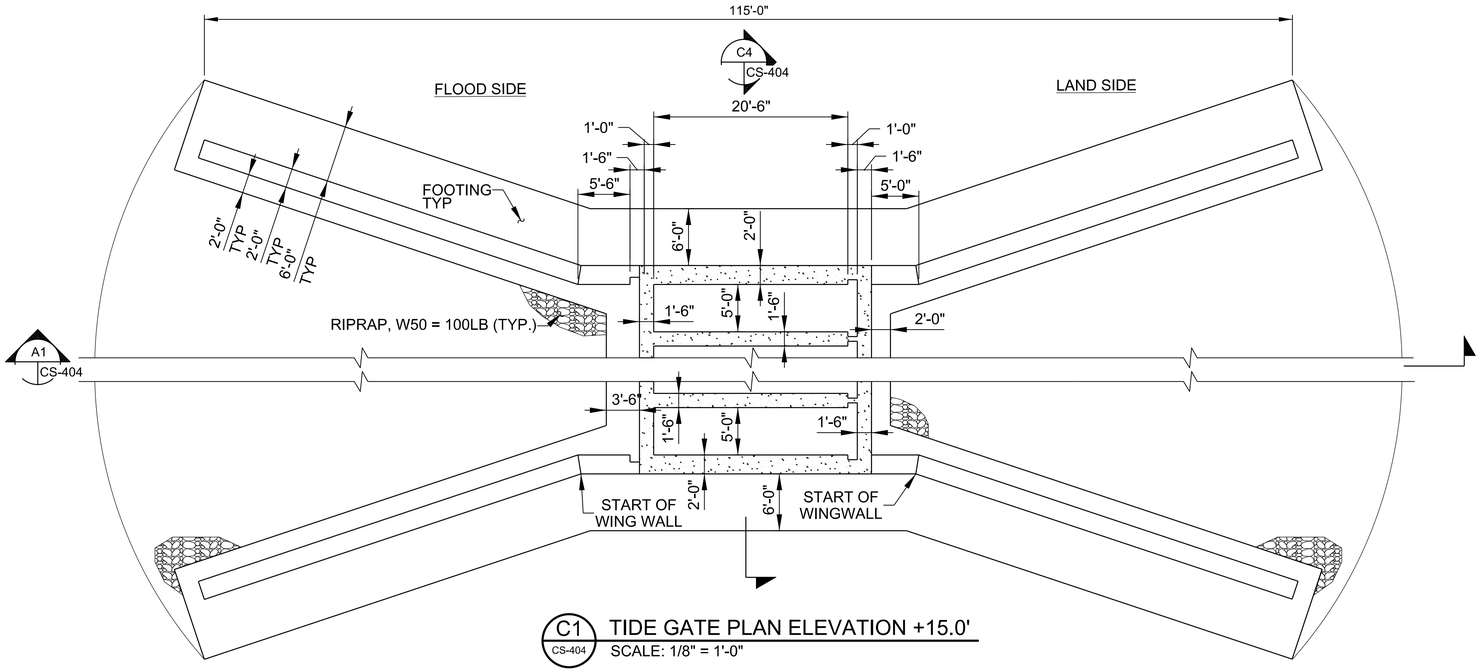

C1 CS-404 TIDE GATE PLAN ELEVATION +15.0'
SCALE: 1/8" = 1'-0"

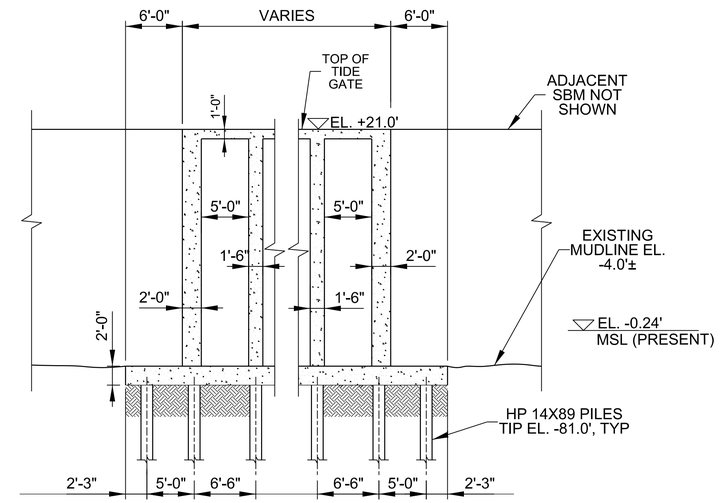

C4 CS-404 TIDE GATE SECTION
SCALE: 1/8" = 1'-0"

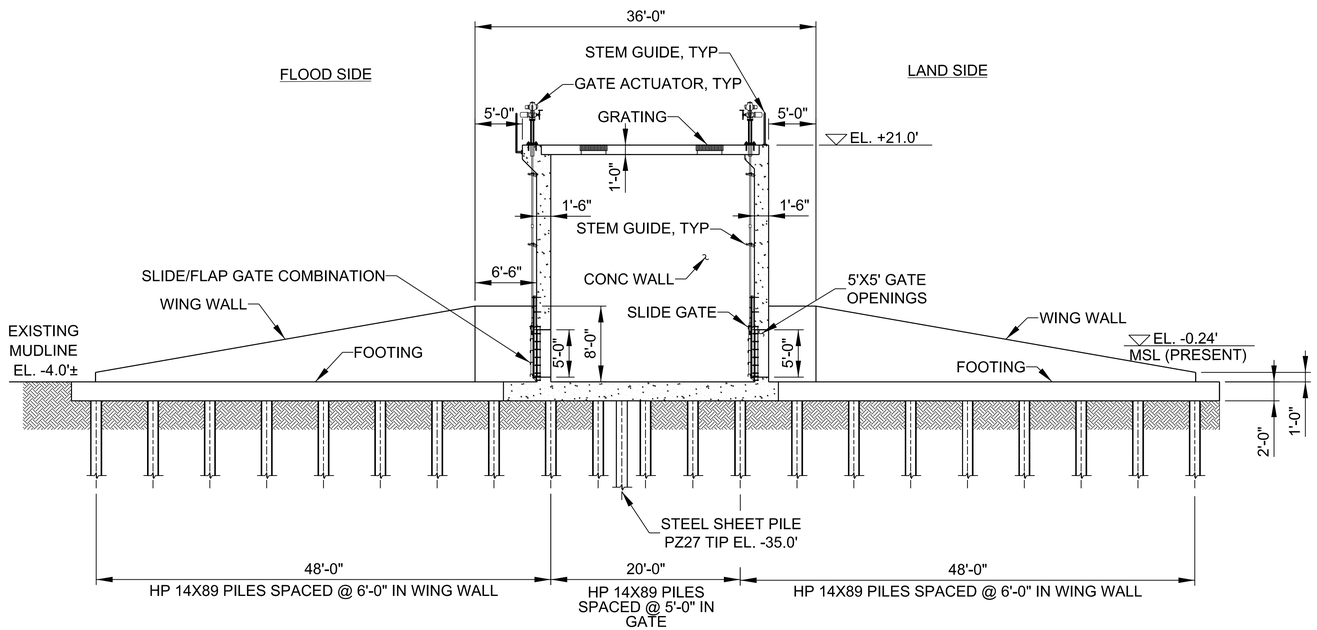

A1 CS-404 TIDE GATE SECTION
SCALE: 1/8" = 1'-0"

PRELIMINARY
NOT FOR CONSTRUCTION

US Army Corps of Engineers®

MARK	DESCRIPTION	DATE	APPR.
B	DRAFT for Public Review - NYNJHAT Study TSP Plan Set	09.23.22	MK
A	DRAFT for DOC-NYNJHAT Study - TSP Plan Set	08.26.22	MK

DESIGNED BY: IK
DWN BY: TC
CKD BY: MK
SUBMITTED BY: SA
PLOT SCALE: AS SHOWN
PLOT DATE: 9/9/2022
SIZE: ANSI D
FILE NAME: 220032-CS-404.dgn
DATE: 08.09.22
SOLICITATION NO.:
CONTRACT NO.: 220032-01
FILE NUMBER:

U.S. ARMY CORPS OF ENGINEERS
U.S. ARMY ENGINEER DISTRICT
NEW YORK
http://www.nan.usace.army.mil
MOFFATT & NICHOL
529 FIFTH AVE., 14TH FLOOR
NEW YORK, NY 10017
212-768-7454

NEW YORK - NEW JERSEY HARBOR AND TRIBUTARIES COASTAL STORM RISK TENTATIVELY SELECTED PLAN

SBM - TIDE GATE
PLAN AND SECTIONS

SHEET ID
CS-404

SHEET 51 OF 88

PATH: Q:\BA\220032-01\20 CADD_Active_SheetSet\220032-CS-404.dgn
FILE: 220032-CS-404.dgn
9/9/2022 11:43:22 AM
LAST PLOTTED BY: tocooper

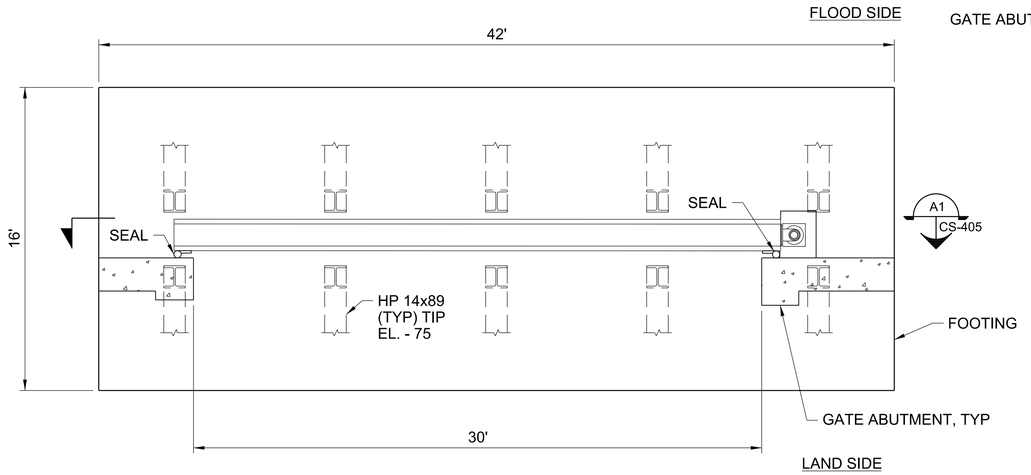

C1 CS-405 PLAN - DEPLOYABLE FLOOD BARRIER - VEHICULAR GATE (SWING GATE AS SHOWN, ROLLER GATE SIMILAR)

SCALE: . 1/4" = 1'-0"

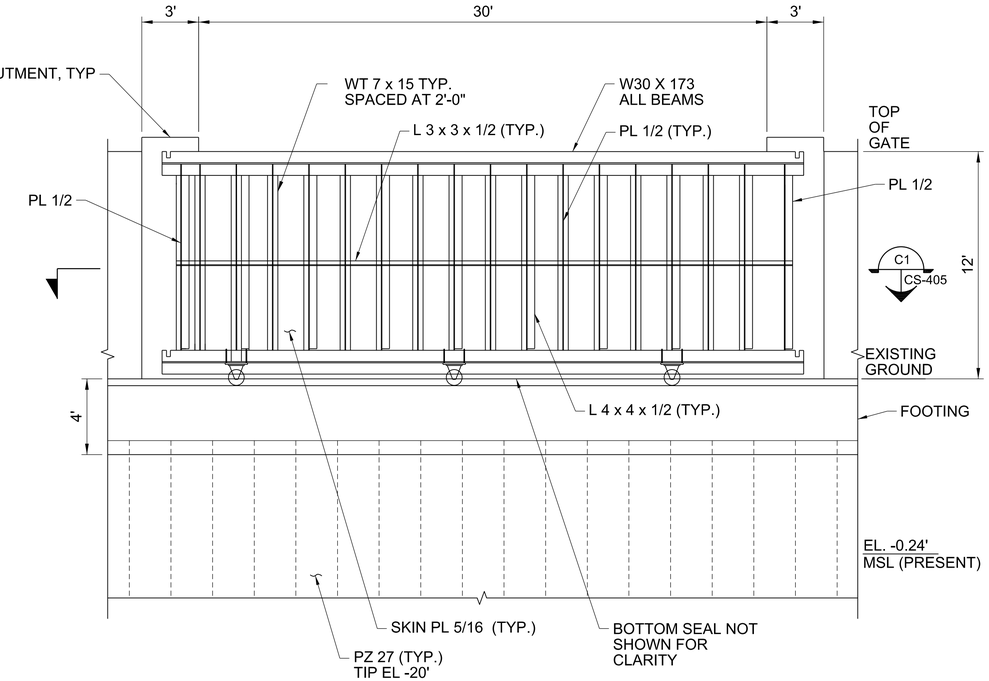

C3 CS-405 ELEVATION - ROLLER GATE (SEE SWING GATE FOR PLAN)

SCALE: . 1/4" = 1'-0"

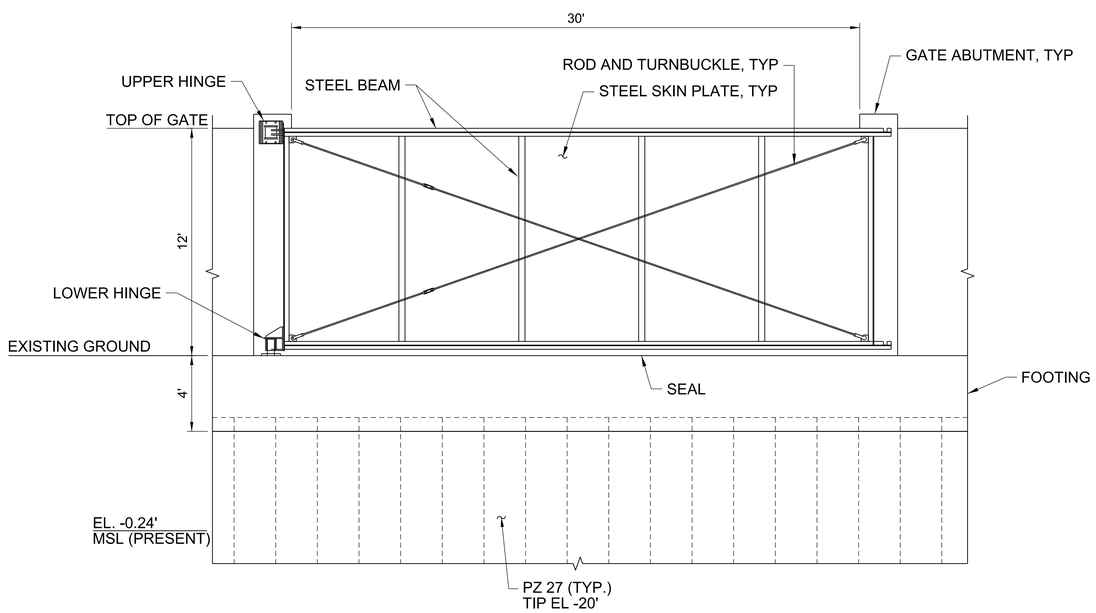

A1 CS-405 ELEVATION - SWING GATE

SCALE: . 1/4" = 1'-0"

PRELIMINARY
NOT FOR CONSTRUCTION

US Army Corps of Engineers®

MARK	DESCRIPTION	DATE	APPR.
B	DRAFT for Public Review - NYNJHAT Study TSP Plan Set	09.23.22	MK
A	DRAFT for DQC-NYNJHAT Study - TSP Plan Set	08.26.22	MK

U.S. ARMY CORPS OF ENGINEERS
U.S. ARMY ENGINEER DISTRICT
NEW YORK
http://www.nan.usace.army.mil

MOFFATT & NICHOL
529 FIFTH AVE., 14TH FLOOR
NEW YORK, NY 10017
212-768-7454

DESIGNED BY: JK | DATE: 09.08.22
DWN BY: TC | CKD BY: MK | SOLICITATION NO.:
SUBMITTED BY: SA | CONTRACT NO.: 220032-01
PLOT SCALE: AS SHOWN | PLOT DATE: 9/9/2022 | FILE NUMBER:
SIZE: ANSI D | FILE NAME: 220032-CS-405.dgn

NEW YORK - NEW JERSEY HARBOR AND TRIBUTARIES COASTAL STORM RISK TENTATIVELY SELECTED PLAN

SBM - SWING GATE PLAN AND SECTIONS

SHEET ID
CS-405

SHEET 52 OF 88

PATH: Q:\BA\220032-01\20 CADD_Active_SheetSet\220032-CS-405.dgn
FILE: 220032-CS-405.dgn
9/9/2022 2:08:42 PM
LAST PLOTTED BY: tocooper

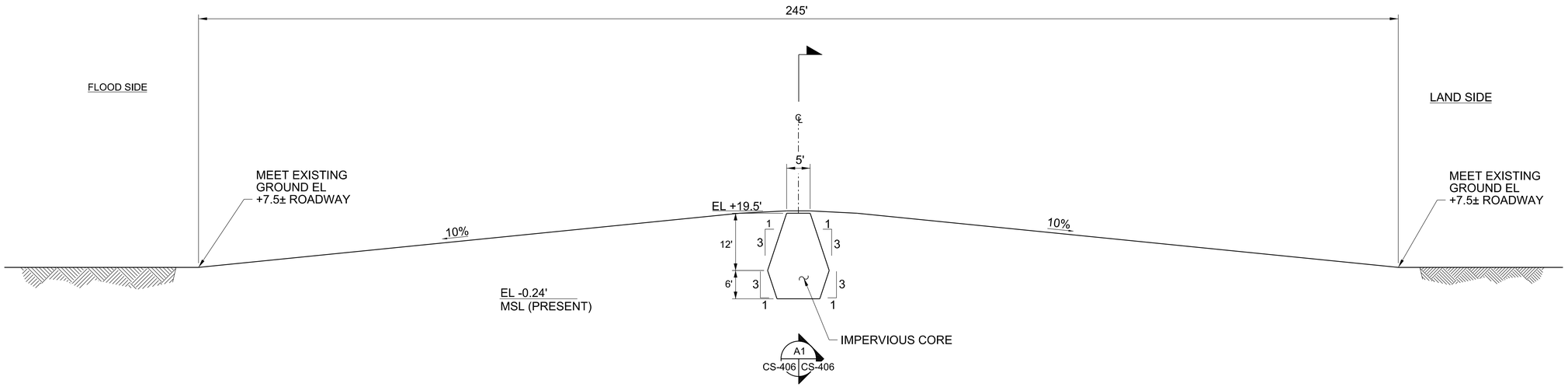

C1 / CS-406 SECTION - CENTER OF ROAD RAMP

SCALE: 1" = 1'-0"

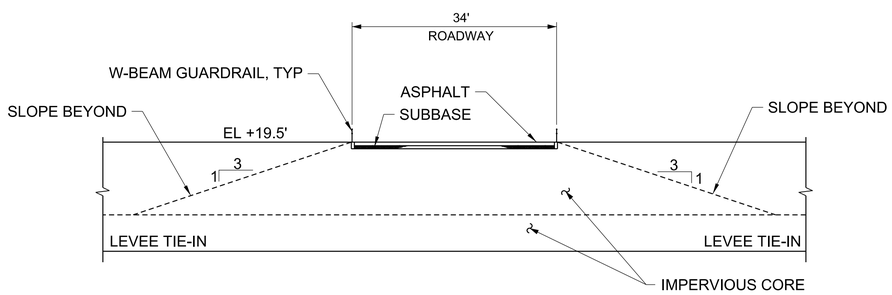

A1 / CS-406 SECTION - ROAD RAMP

SCALE: 1' = 1'-0"

PRELIMINARY
NOT FOR CONSTRUCTION

US Army Corps of Engineers®

MARK	DESCRIPTION	DATE	APPR.
B	DRAFT for Public Review - NYNJHAT Study TSP Plan Set	09.23.22	MK
A	DRAFT for DOC-NYNJHAT Study - TSP Plan Set	08.26.22	MK

DESIGNED BY: IK | DATE: 09/08/22
DWN BY: TC | CKD BY: MK | SOLICITATION NO.:
SUBMITTED BY: SA | CONTRACT NO.: 22003-01
PLOT SCALE: AS SHOWN | PLOT DATE: 9/9/2022 | FILE NUMBER:
SIZE: ANSI D | FILE NAME: 220032-CS-406.dgn

U.S. ARMY CORPS OF ENGINEERS
U.S. ARMY ENGINEER DISTRICT
NEW YORK
http://www.nan.usace.army.mil
MOFFATT & NICHOL
529 FIFTH AVE., 14TH FLOOR
NEW YORK, NY 10017
212-768-7454

NEW YORK - NEW JERSEY HARBOR AND TRIBUTARIES COASTAL STORM RISK TENTATIVELY SELECTED PLAN

SBM - ROAD RAMP SECTION

SHEET ID
CS-406

SHEET 53 OF 88

PATH: Q:\BA\220032-01\20 CADD_Active_SheetSet\220032-CS-406.dgn
FILE: 220032-CS-406.dgn
9/9/2022 11:43:24 AM
LAST PLOTTED BY: tocooper

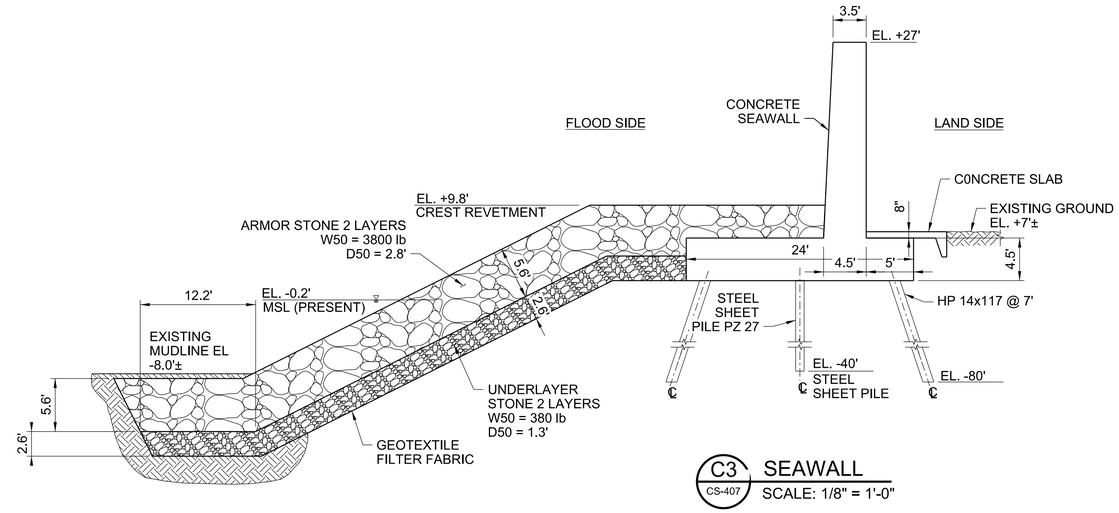

C3 / CS-407 SEAWALL
SCALE: 1/8" = 1'-0"

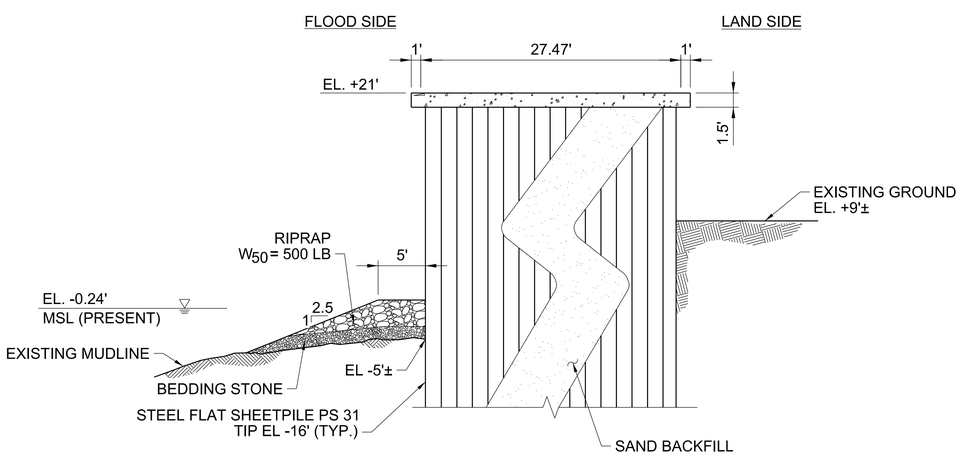

A1 / CS-407 ELEVATED PROMENADE
SCALE: 1/8" = 1'-0"

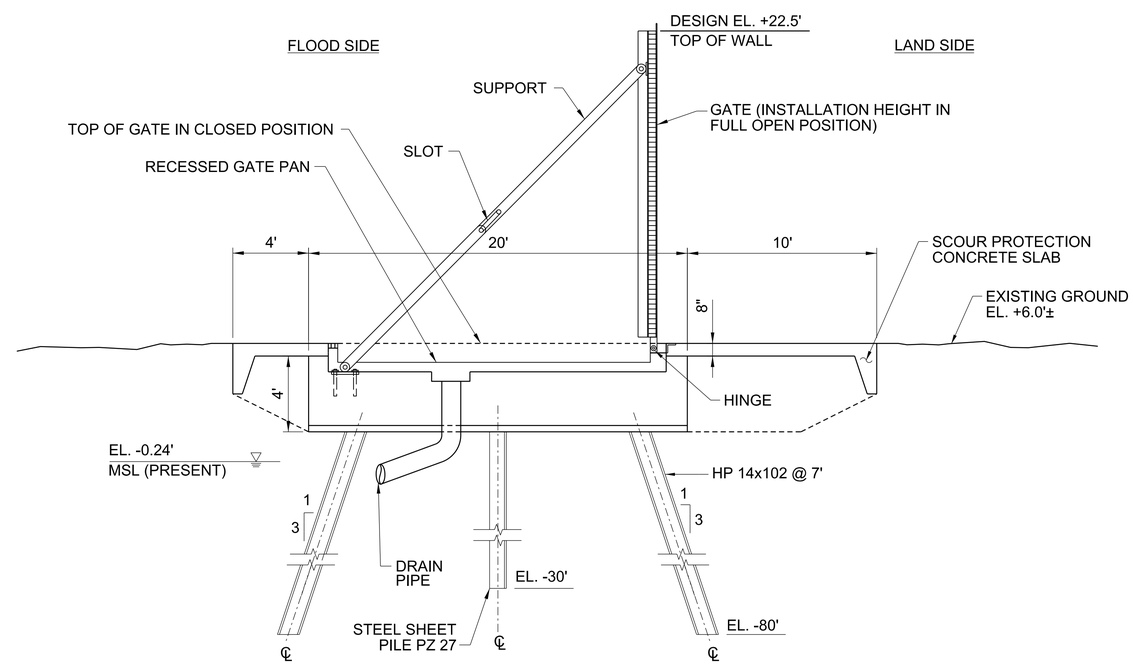

A3 / CS-407 FLIP-UP BARRIER
SCALE: . 1/4" = 1'-0"

PRELIMINARY
NOT FOR CONSTRUCTION

US Army Corps of Engineers®

MARK	DESCRIPTION	DATE	APPR.
B	DRAFT for Public Review - NYNJHAT Study TSP Plan Set	09.23.22	MK
A	DRAFT for DQC-NYNJHAT Study - TSP Plan Set	08.26.22	MK

DESIGNED BY: IK
DWN BY: TC
CKD BY: MK
SUBMITTED BY: SA
PLOT SCALE: AS SHOWN
PLOT DATE: 9/9/2022
SIZE: ANSI D
FILE NAME: 220032-CS-407.dgn
DATE: 08.09.22
SOLICITATION NO.:
CONTRACT NO.: 220032-01
FILE NUMBER:

U.S. ARMY CORPS OF ENGINEERS
U.S. ARMY ENGINEER DISTRICT
NEW YORK
http://www.nan.usace.army.mil
MOFFATT & NICHOL
529 FIFTH AVE., 14TH FLOOR
NEW YORK, NY 10017
212-768-7454

NEW YORK - NEW JERSEY HARBOR AND TRIBUTARIES COASTAL STORM RISK TENTATIVELY SELECTED PLAN

SBM - PROMENADE, SEAWALL AND FLIP UP BARRIER SECTIONS

SHEET ID
CS-407
SHEET 54 OF 88

PATH: \\mne.net\Projects\BA\220032-01\20 CADD_Active_SheetSet\220032-CS-407.dgn
FILE: 220032-CS-407.dgn
9/9/2022 11:43:28 AM tocooper
LAST PLOTTED BY:

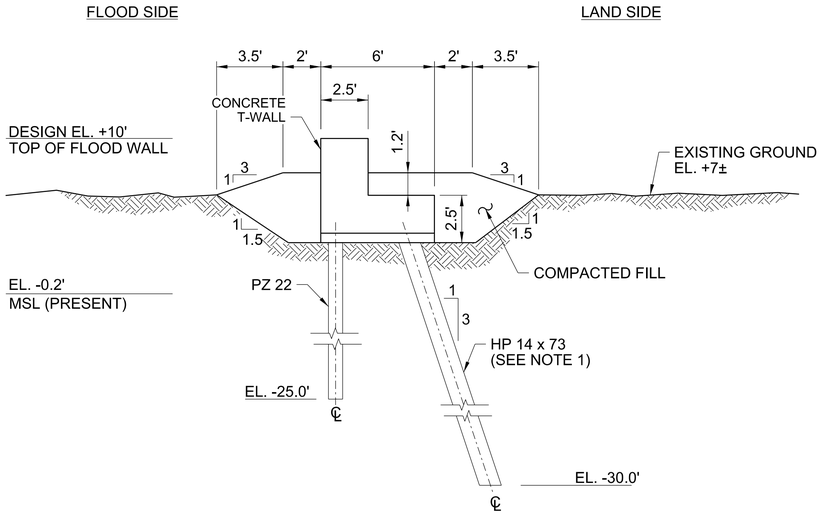

C1 CS-501 LOW FLOODWALL
SCALE: 1/4" = 1'-0"

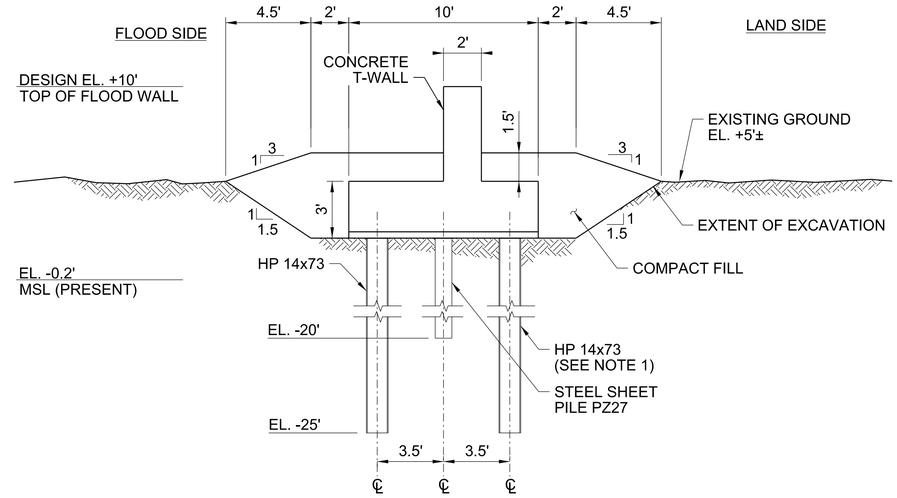

C3 CS-501 STANDARD FLOODWALL
SCALE: 1/4" = 1'-0"

NOTE

1. PILE SPACINGS FOR LOW, MEDIUM, AND HIGH FLOODWALLS ARE 10', 8.5' AND 6.5', RESPECTIVELY.

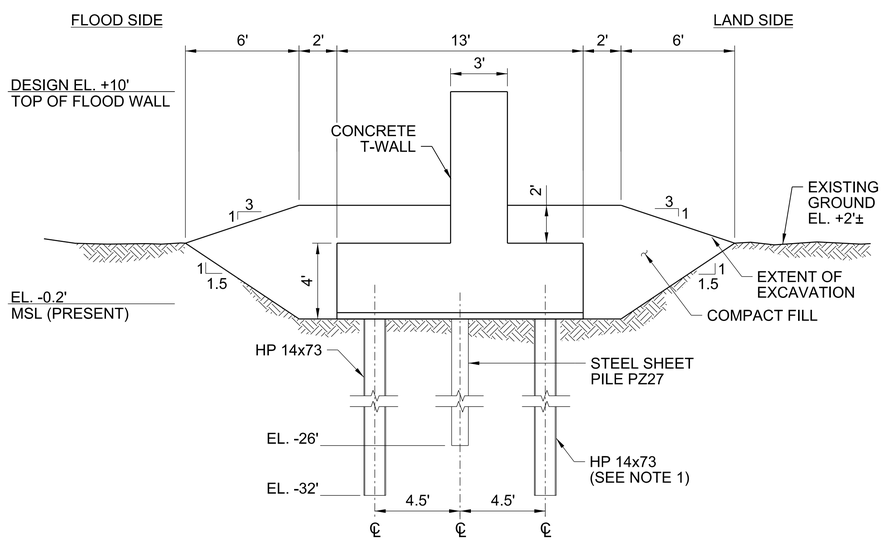

A1 CS-501 HIGH FLOODWALL
SCALE: 1/4" = 1'-0"

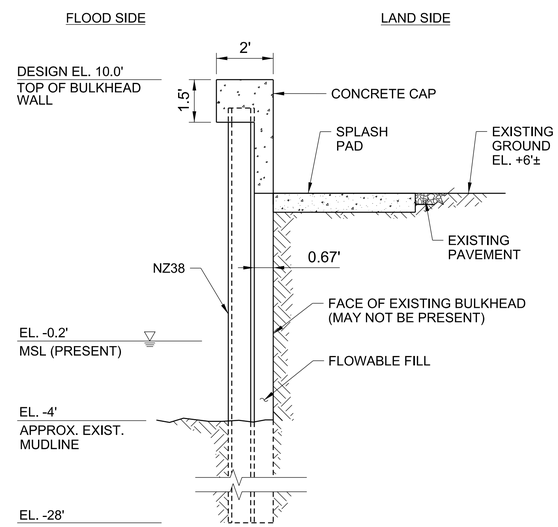

A3 CS-501 SHALLOW BULKHEAD
SCALE: 3/8" = 1'-0"

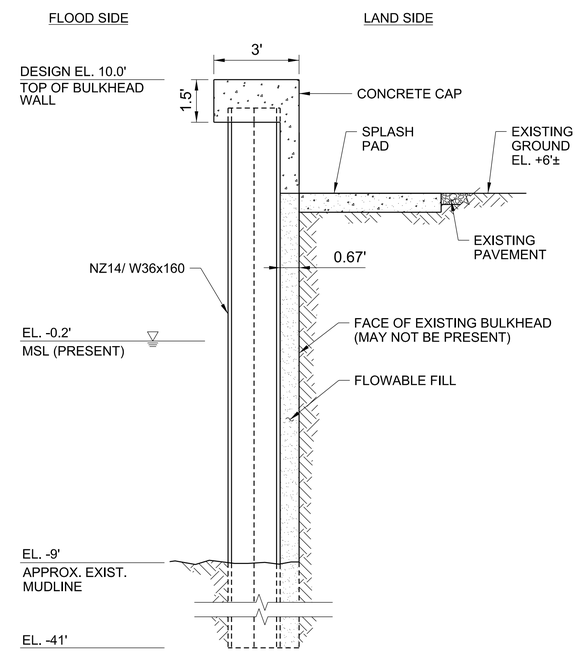

A4 CS-501 DEEP BULKHEAD
SCALE: 3/8" = 1'-0"

PRELIMINARY
NOT FOR CONSTRUCTION

US Army Corps of Engineers®

MARK	DESCRIPTION	DATE	APPR.
B	DRAFT for Public Review - NYNJHAT Study TSP Plan Set	09.23.22	MK
A	DRAFT for DOC-NYNJHAT Study - TSP Plan Set	08.26.22	MK

U.S. ARMY CORPS OF ENGINEERS
U.S. ARMY ENGINEER DISTRICT
NEW YORK
http://www.nan.usace.army.mil

MOFFATT & NICHOL
529 FIFTH AVE., 14TH FLOOR
NEW YORK, NY 10017
212-768-7454

DESIGNED BY: IK | DWN BY: AA | CKD BY: MK | SUBMITTED BY: SA | PLOT SCALE: AS SHOWN | PLOT DATE: 09/09/22 | SIZE: ANSI D | FILE NAME: 220032-CS-501.dgn

DATE: 09/08/22 | SOLICITATION NO.: | CONTRACT NO.: 220032-01 | FILE NUMBER:

NEW YORK - NEW JERSEY HARBOR AND TRIBUTARIES COASTAL STORM RISK TENTATIVELY SELECTED PLAN

RRF - FLOODWALL AND BULKHEAD TYPICAL SECTIONS

SHEET ID
CS-501

SHEET 55 OF 88

PATH: Q:\BA\220032-01\20 CADD_Active_SheetSet\220032-CS-501.dgn
FILE: 220032-CS-501.dgn
9/9/2022
11:43:33 AM
LAST PLOTTED BY: tocooper

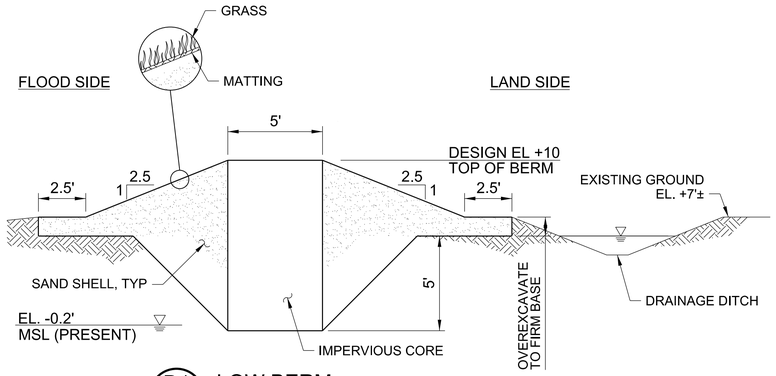

D1 CS-502 LOW BERM
SCALE: 1/4" = 1'-0"

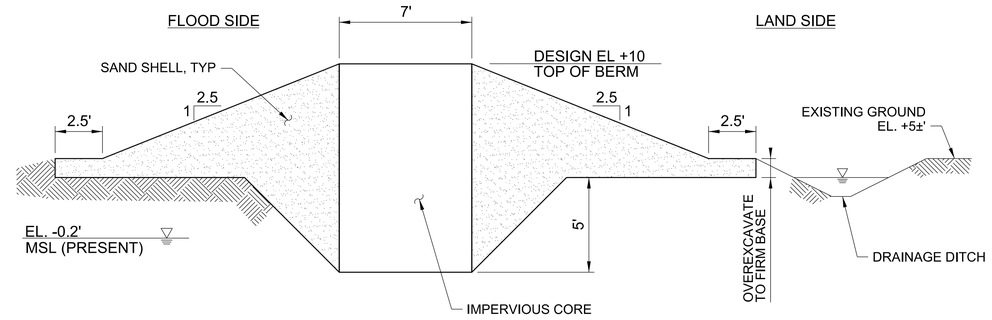

D4 CS-502 MEDIUM BERM
SCALE: 1/4" = 1'-0"

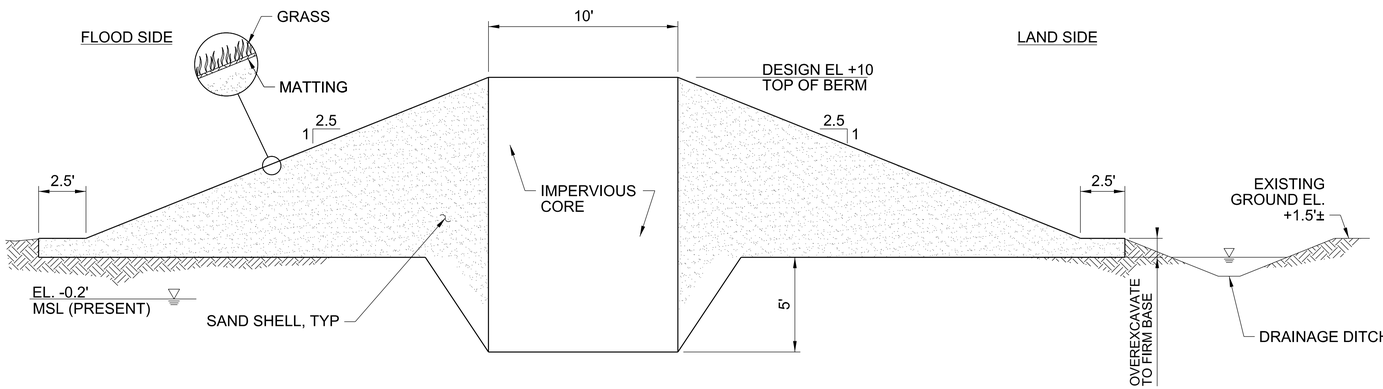

B1 CS-502 HIGH BERM
SCALE: 1/4" = 1'-0"

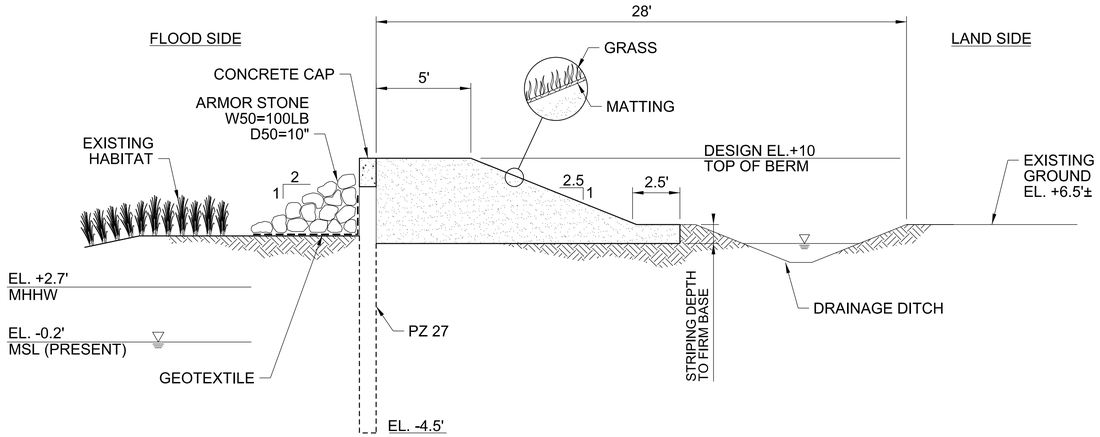

A1 CS-502 HYBRID BERM
SCALE: 1/4" = 1'-0"

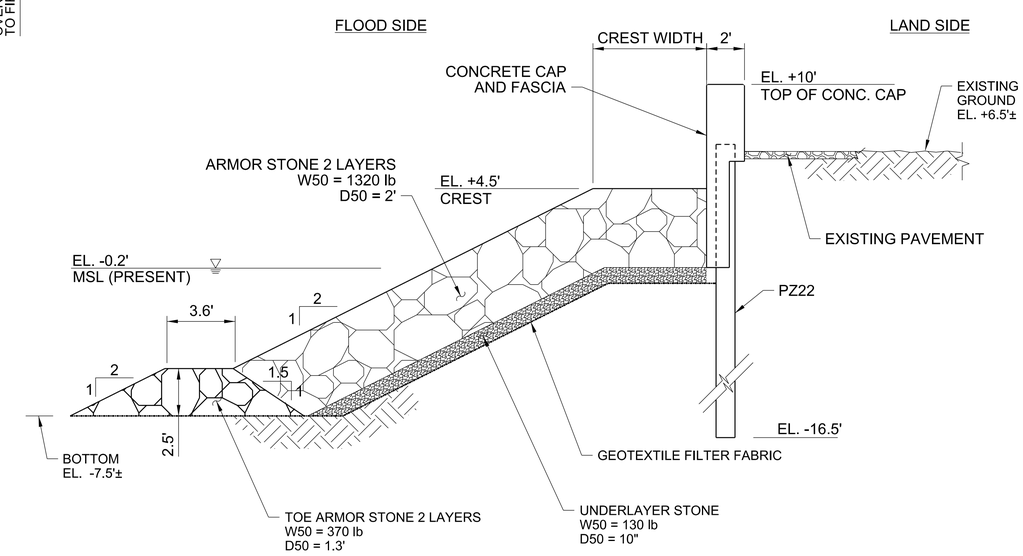

A4 CS-502 REVETMENT WITH FLOODWALL
SCALE: 1/4" = 1'-0"

PRELIMINARY
NOT FOR CONSTRUCTION

US Army Corps of Engineers®

MARK	DESCRIPTION	DATE	APPR.
B	DRAFT for Public Review - NYNJHAT Study TSP Plan Set	09.23.22	MK
A	DRAFT for DOC-NYNJHAT Study - TSP Plan Set	08.26.22	MK

DESIGNED BY: IK
DWN BY: AA
CKD BY: MK
SUBMITTED BY: SA
PLOT SCALE: AS SHOWN
PLOT DATE: 9/9/2022
DATE: 09.06.22
SOLICITATION NO.:
CONTRACT NO.: 220032-01
FILE NUMBER:
SIZE: ANSI D
FILE NAME: 220032-CS-502.dgn

U.S. ARMY CORPS OF ENGINEERS
U.S. ARMY ENGINEER DISTRICT
NEW YORK
http://www.nan.usace.army.mil
MOFFATT & NICHOL
529 FIFTH AVE., 14TH FLOOR
NEW YORK, NY 10017
212-768-7454

NEW YORK - NEW JERSEY HARBOR AND TRIBUTARIES COASTAL STORM RISK TENTATIVELY SELECTED PLAN

RRF - BERM AND REVETMENT WITH FLOODWALL TYPICAL SECTIONS

SHEET ID
CS-502
SHEET 56 OF 88

PATH: Q:\BA\220032-01\20 CADD_Active_SheetSet\220032-CS-502.dgn
FILE: 220032-CS-502.dgn
9/9/2022 11:43:33 AM
LAST PLOTTED BY: tocooper

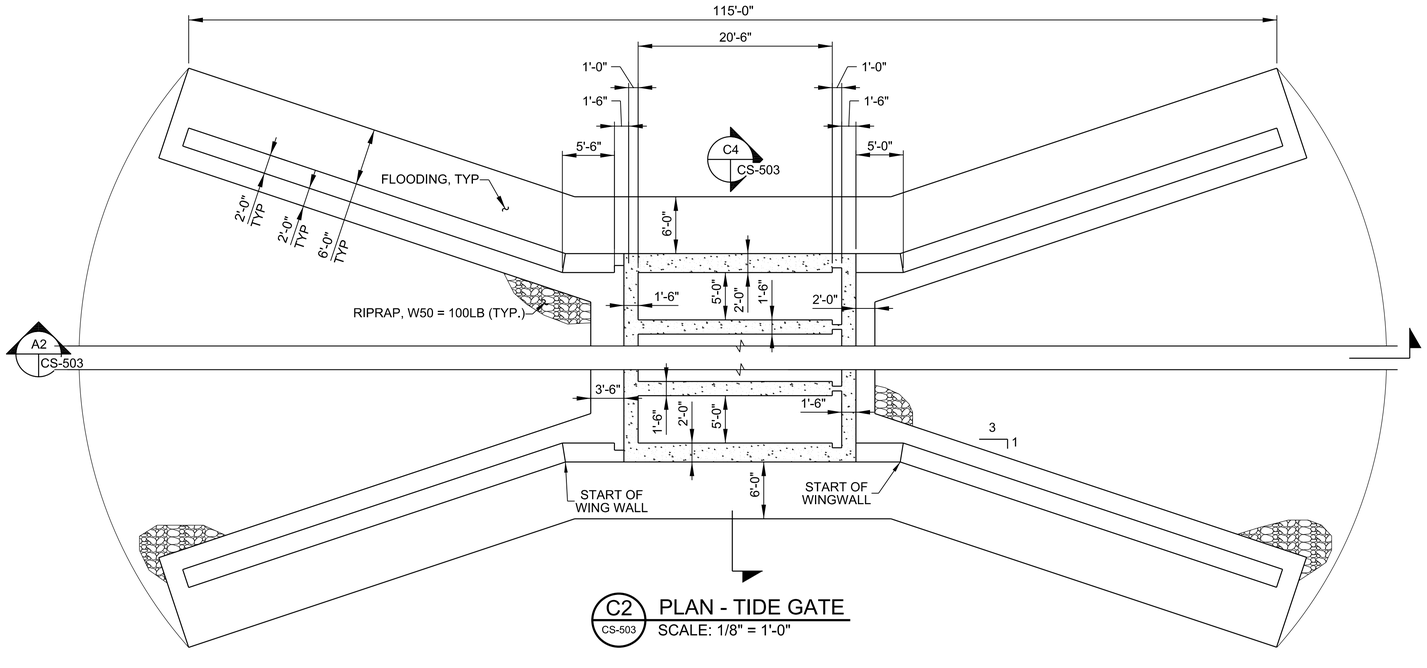

C2 CS-503 PLAN - TIDE GATE
SCALE: 1/8" = 1'-0"

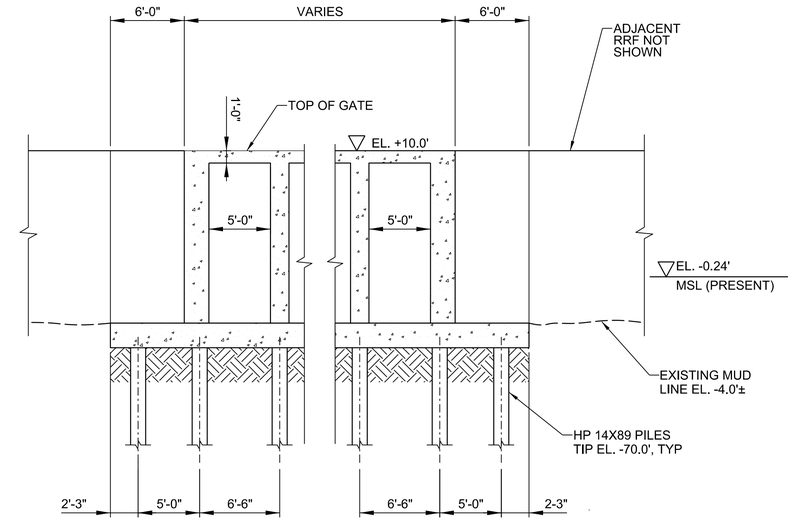

C4 CS-503 SECTION - TIDE GATE
SCALE: 1/8" = 1'-0"

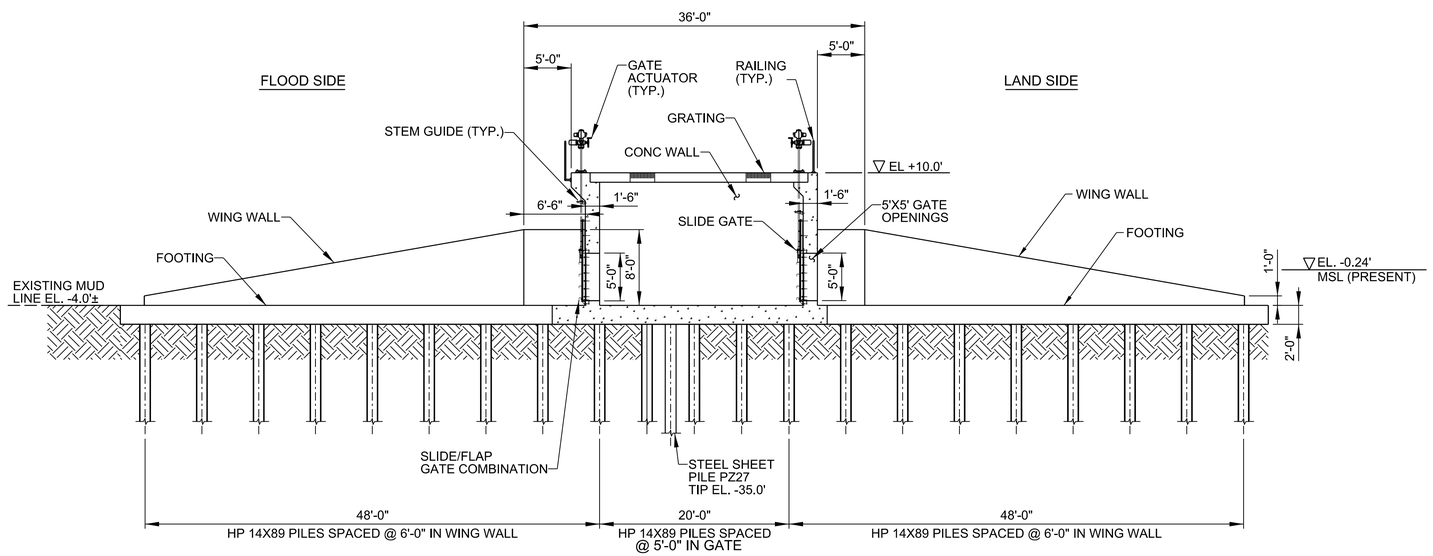

A2 CS-503 SECTION - TIDE GATE
SCALE: 1/8" = 1'-0"

PRELIMINARY
NOT FOR CONSTRUCTION

US Army Corps of Engineers®

MARK	DESCRIPTION	DATE	APPR.
B	DRAFT for Public Review - NYNJHAT Study TSP Plan Set	09.23.22	MK
A	DRAFT for DOC-NYNJHAT Study - TSP Plan Set	08.26.22	MK

DESIGNED BY: IK | DATE: 09/08/22
DWN BY: AA | CKD BY: MK | SOLICITATION NO.:
SUBMITTED BY: SA | CONTRACT NO.: 220032-01
PLOT SCALE: AS SHOWN | PLOT DATE: 9/9/2022 | FILE NUMBER:
SIZE: ANSI D | FILE NAME: 220032-CS-503.dgn

U.S. ARMY CORPS OF ENGINEERS
U.S. ARMY ENGINEER DISTRICT
NEW YORK
http://www.nan.usace.army.mil
MOFFATT & NICHOL
529 FIFTH AVE., 14TH FLOOR
NEW YORK, NY 10017
212-768-7454

NEW YORK - NEW JERSEY HARBOR AND TRIBUTARIES COASTAL STORM RISK TENTATIVELY SELECTED PLAN

RRF - TIDE GATE PLAN AND SECTIONS

SHEET ID
CS-503
SHEET 57 OF 88

PATH: Q:\BA\220032-01\20 CADD_Active_SheetSet\220032-CS-503.dgn
FILE: 220032-CS-503.dgn
9/9/2022 11:43:34 AM
LAST PLOTTED BY: tocooper

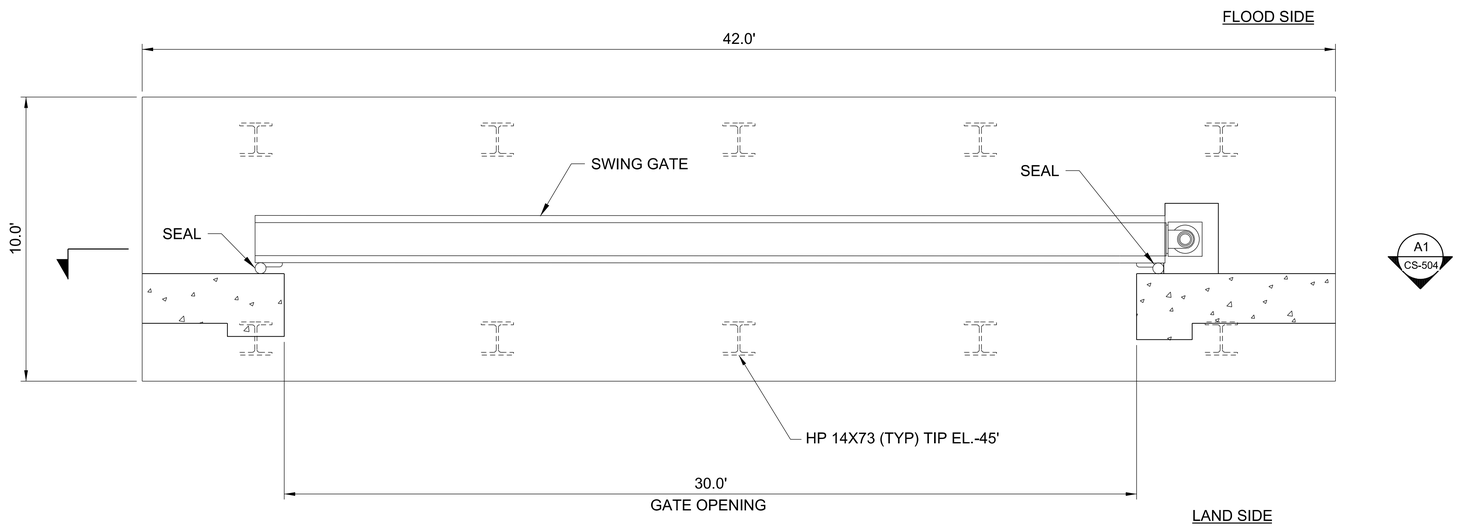

C1 CS-504 PLAN - DEPLOYABLE FLOOD BARRIER - VEHICULAR GATE
(SWING GATE AS SHOWN ROLLER GATE SIMILAR)
SCALE: 3/8" = 1'-0"

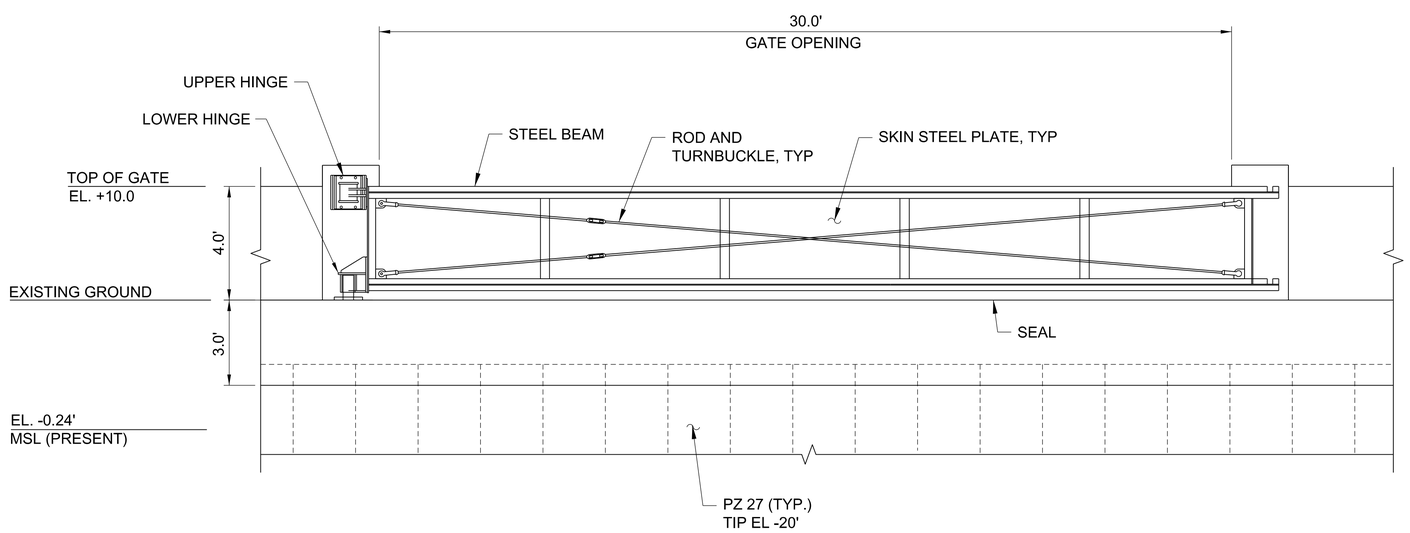

A1 CS-504 ELEVATION DEPLOYABLE FLOODGATE - VEHICULAR GATE
SCALE: 3/8" = 1'-0"

PRELIMINARY
NOT FOR CONSTRUCTION

US Army Corps of Engineers®

MARK	DESCRIPTION	DATE	APPR.
B	DRAFT for Public Review - NYNJHAT Study TSP Plan Set	09.23.22	MK
A	DRAFT for DOC-NYNJHAT Study - TSP Plan Set	08.26.22	MK

U.S. ARMY CORPS OF ENGINEERS
U.S. ARMY ENGINEER DISTRICT
NEW YORK
http://www.nan.usace.army.mil
MOFFATT & NICHOL
529 FIFTH AVE., 14TH FLOOR
NEW YORK, NY 10017
212-768-7454

DESIGNED BY: IK | DATE: 09.09.22
DWN BY: AA | CKD BY: MK | SOLICITATION NO.:
SUBMITTED BY: SA | CONTRACT NO.: 220032-01
PLOT SCALE: AS SHOWN | PLOT DATE: 9/9/2022 | FILE NUMBER:
SIZE: ANSI D | FILE NAME: 220032-CS-504.dgn

NEW YORK - NEW JERSEY HARBOR AND TRIBUTARIES COASTAL STORM RISK TENTATIVELY SELECTED PLAN

RRF - SWING GATE
PLAN AND SECTION

SHEET ID
CS-504
SHEET 58 OF 88

PATH: Q:\BA\220032-01\20 CADD_Active_SheetSet\220032-CS-504.dgn
FILE: 220032-CS-504.dgn 9/9/2022 11:43:35 AM
LAST PLOTTED BY: tocooper

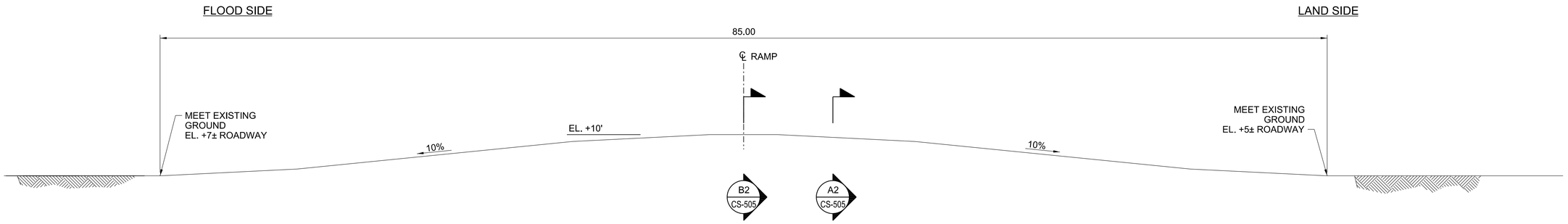

D1 CS-505 SECTION - CENTER OF ROAD RAMP

SCALE: 1/4" = 1'-0"

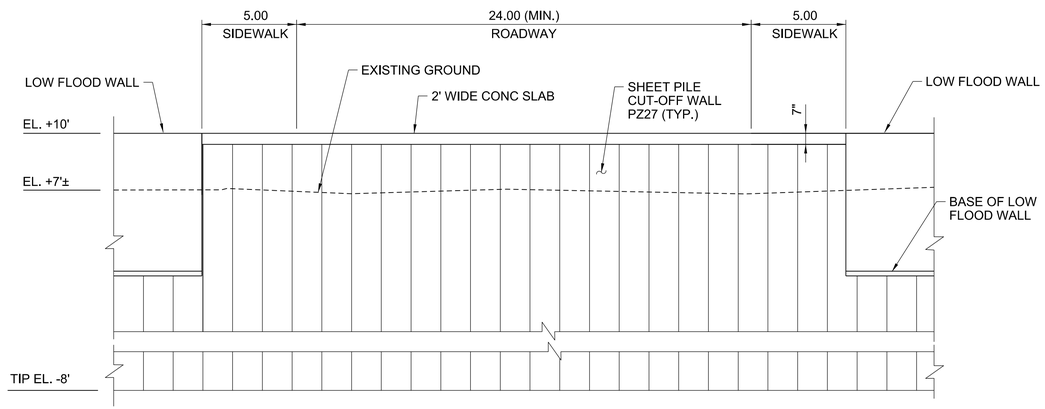

B2 CS-505 SECTION - CENTER OF ROAD RAMP

SCALE: 1/4" = 1'-0"

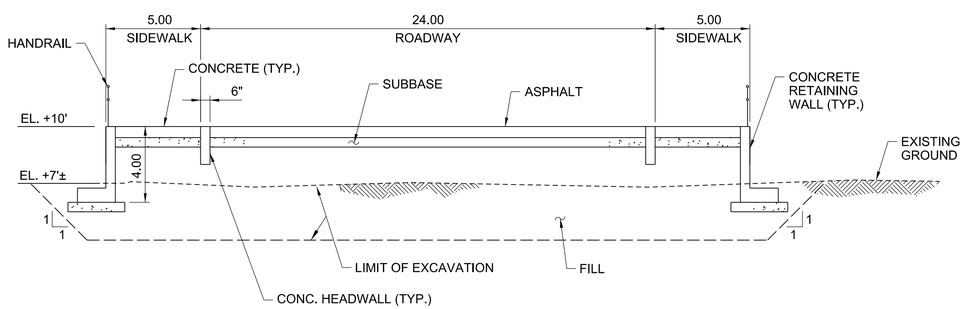

A2 CS-505 SECTION - PROTECTED SIDE

SCALE: 1/4" = 1'-0"

PRELIMINARY
NOT FOR CONSTRUCTION

US Army Corps of Engineers®

MARK	DESCRIPTION	DATE	APPR.
B	DRAFT for Public Review - NYNJHAT Study TSP Plan Set	09.23.22	MK
A	DRAFT for DOC-NYNJHAT Study - TSP Plan Set	08.26.22	MK

U.S. ARMY CORPS OF ENGINEERS
U.S. ARMY ENGINEER DISTRICT
NEW YORK
http://www.nan.usace.army.mil

MOFFATT & NICHOL
529 FIFTH AVE., 14TH FLOOR
NEW YORK, NY 10017
212-768-7454

DESIGNED BY: IK | DATE: 09.09.22 | SOLICITATION NO.:
DWN BY: AA | CKD BY: MK | CONTRACT NO.: 220032-01
SUBMITTED BY: SA | PLOT SCALE: AS SHOWN | PLOT DATE: 9/9/2022 | FILE NUMBER:
SIZE: ANSI D | FILE NAME: 220032-CS-505.dgn

NEW YORK - NEW JERSEY HARBOR AND TRIBUTARIES COASTAL STORM RISK TENTATIVELY SELECTED PLAN

RRF - ROAD RAMP SECTIONS

SHEET ID
CS-505
SHEET 59 OF 88

PATH: Q:\BA\220032-01\20 CADD_Active_SheetSet\220032-CS-505.dgn
FILE: 220032-CS-505.dgn
9/9/2022 11:43:35 AM
LAST PLOTTED BY: tocooper

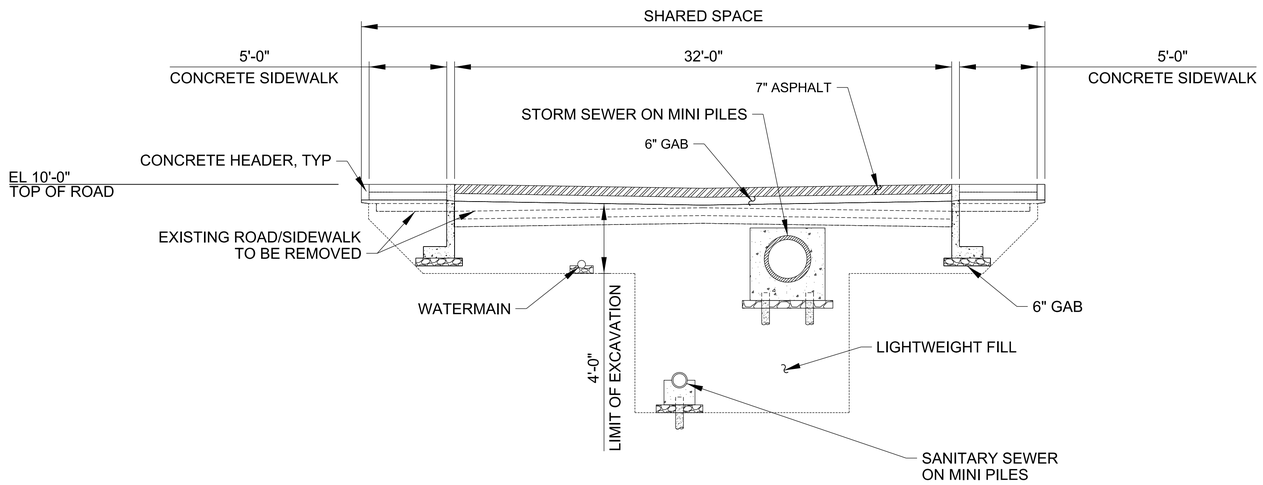

B3 / CS-506 SECTION - ROAD RAISING

SCALE: 1/16" = 1'-0"

PRELIMINARY
NOT FOR CONSTRUCTION

PATH: Q:\BA\220032-01\20 CADD_Active_SheetSet\220032-CS-506.dgn

FILE: 220032-CS-506.dgn

LAST PLOTTED BY: tocooper 11:43:36 AM 9/9/2022

US Army Corps of Engineers®

MARK	DESCRIPTION	DATE	APPR.
B	DRAFT for Public Review - NYNJHAT Study TSP Plan Set	09.23.22	MK
A	DRAFT for DOC-NYNJHAT Study - TSP Plan Set	08.26.22	MK

U.S. ARMY CORPS OF ENGINEERS
U.S. ARMY ENGINEER DISTRICT
NEW YORK
http://www.nan.usace.army.mil

MOFFATT & NICHOL
529 FIFTH AVE., 14TH FLOOR
NEW YORK, NY 10017
212-768-7454

DESIGNED BY: MK
DWN BY: AA
CKD BY: MK
SUBMITTED BY: SA
PLOT SCALE: AS SHOWN
PLOT DATE: 09/09/22
SIZE: ANSI D
FILE NAME: 220032-CS-506.dgn
DATE: 09.09.22
SOLICITATION NO.:
CONTRACT NO.: 220032-01
FILE NUMBER:

NEW YORK - NEW JERSEY HARBOR AND TRIBUTARIES COASTAL STORM RISK TENTATIVELY SELECTED PLAN

RRF - ROAD RAISING SECTION

SHEET ID
CS-506

SHEET 60 OF 88

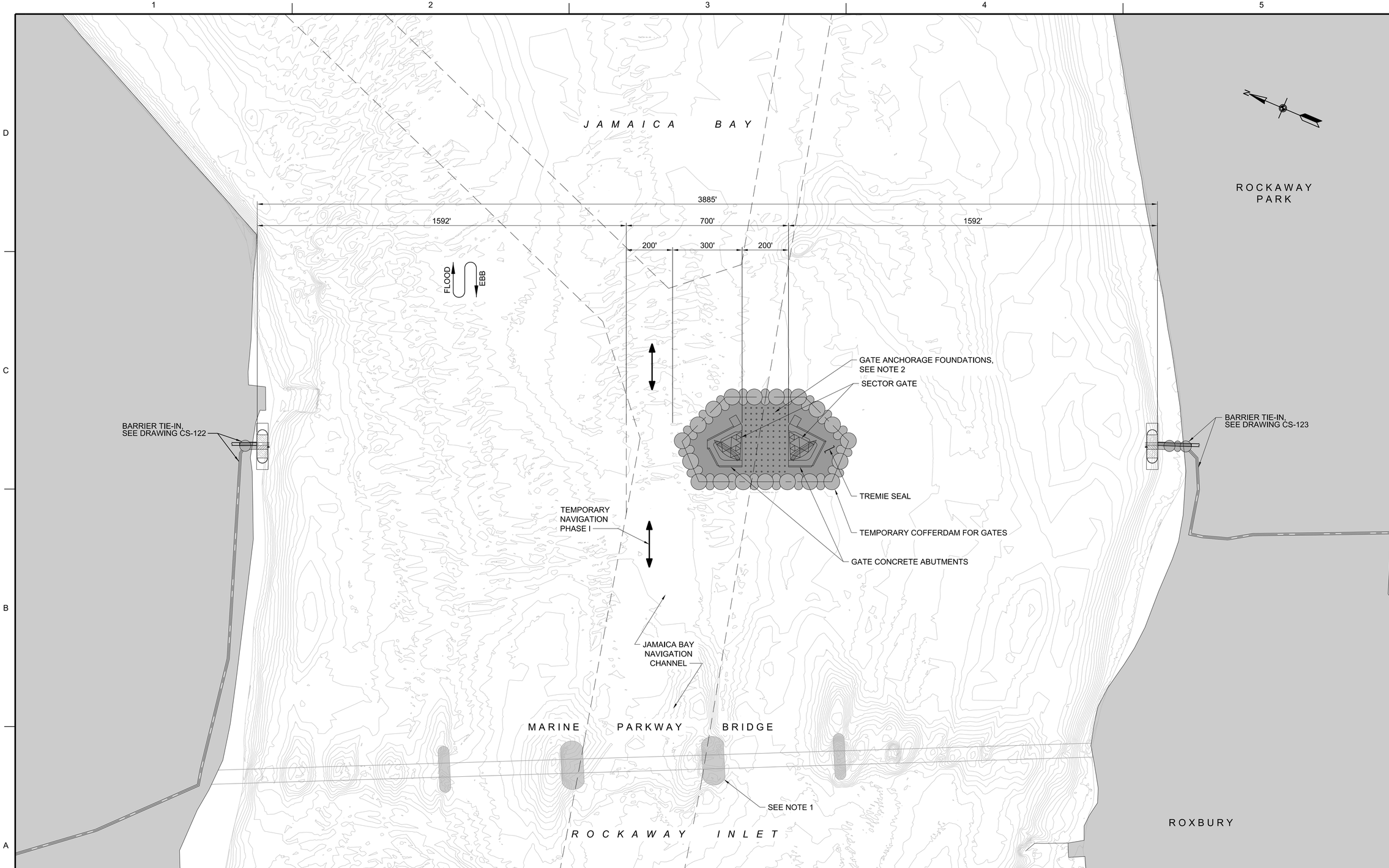

NOTES:

1. THE MARINE PARKWAY BRIDGE (GIL HODGES MEMORIAL BRIDGE) IS SHOWN IN ITS CURRENT SPAN CONFIGURATION. FOR PURPOSE OF THIS CONCEPT EVALUATION, IT IS ASSUMED THAT THE BRIDGE STRUCTURE WILL BE REPLACED WITH A NEW STRUCTURE WITH AN ALTERNATE SPAN GEOMETRY THAT PROVIDES FOR NAVIGATION THROUGH THE JAMAICA BAY STORM SURGE BARRIER.

2. 36" DIA x 3/4" STEEL PIPE PILES. TIP EL -175, TOP EL -45. 9'x9' GRID AT SECTOR GATE ABUTMENTS. 10'x15' GRID AT REMAINING TREMIE SEAL.

200' 0' 200' 400'

SCALE: 1"=200'

US Army Corps of Engineers®

MARK	DESCRIPTION	DATE	APPR.
B	DRAFT for Public Review - NYNJHAT Study TSP Plan Set	09.23.22	MK
A	DRAFT for DOC-NYNJHAT Study - TSP Plan Set	08.26.22	MK

DESIGNED BY: IK
DWN BY:
CKD BY: MK
SUBMITTED BY: SA
PLOT SCALE: AS SHOWN
PLOT DATE: 9/13/2022
SIZE: ANSI D
FILE NAME: 220032-CS-601.dgn
DATE: 09.09.22
SOLICITATION NO.:
CONTRACT NO.: 220032-01
FILE NUMBER:

U.S. ARMY CORPS OF ENGINEERS
U.S. ARMY ENGINEER DISTRICT
NEW YORK
http://www.nan.usace.army.mil
MOFFATT & NICHOL
529 FIFTH AVE., 14TH FLOOR
NEW YORK, NY 10017
212-768-7454

NEW YORK - NEW JERSEY HARBOR AND TRIBUTARIES COASTAL STORM RISK
TENTATIVELY SELECTED PLAN

JAMAICA BAY PLAN
SECTOR GATES PHASE I

SHEET ID
CS-601
SHEET 61 OF 88

PATH: Q:\BA\220032-01\20 CADD_Active_SheetSet\220032-CS-601.dgn
FILE: 220032-CS-601.dgn
9/13/2022 11:58:32 AM
LAST PLOTTED BY: pvoelker

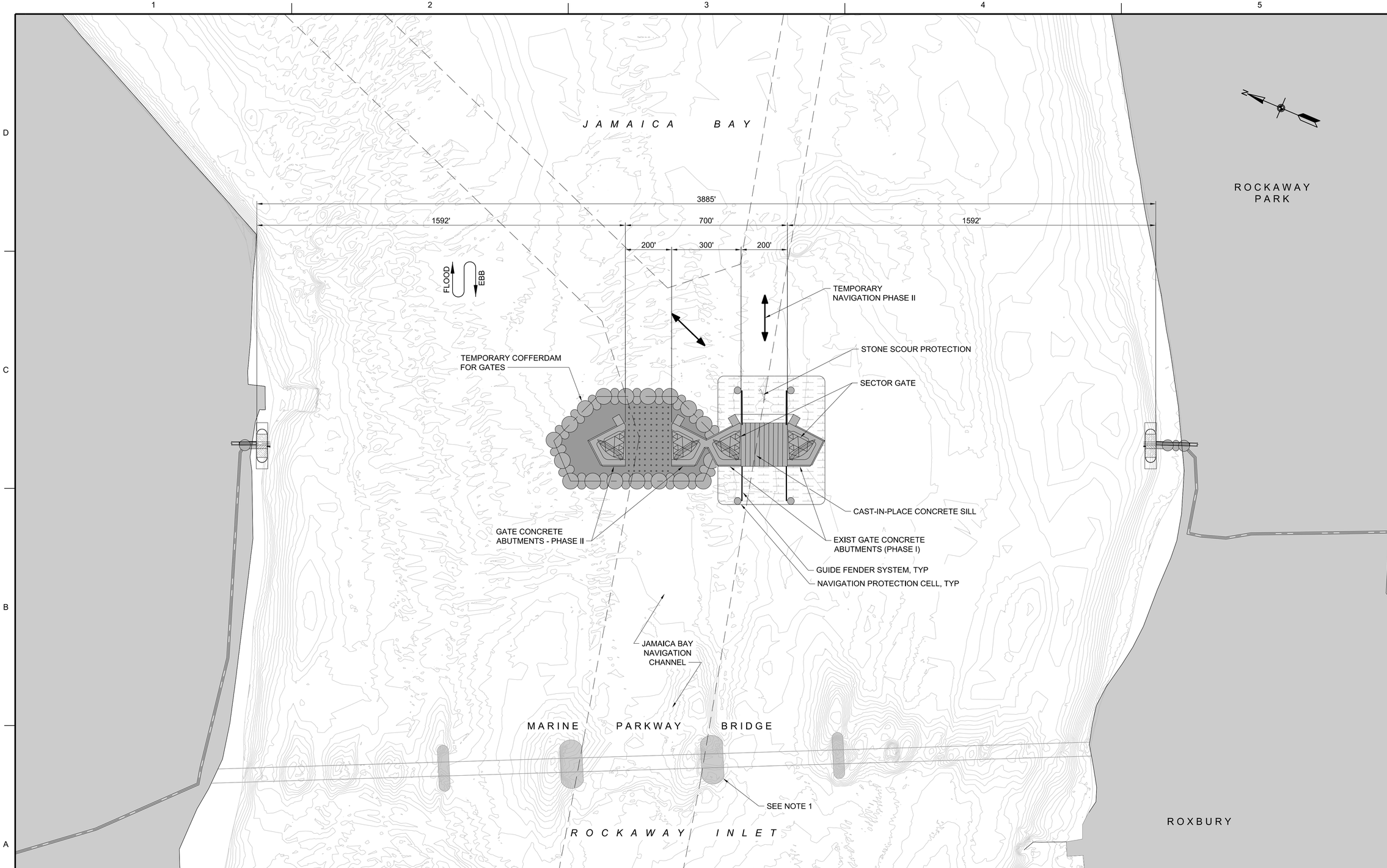

NOTES:

1. THE MARINE PARKWAY BRIDGE (GIL HODGES MEMORIAL BRIDGE) IS SHOWN IN ITS CURRENT SPAN CONFIGURATION. FOR PURPOSE OF THIS CONCEPT EVALUATION, IT IS ASSUMED THAT THE BRIDGE STRUCTURE WILL BE REPLACED WITH A NEW STRUCTURE WITH AN ALTERNATE SPAN GEOMETRY THAT PROVIDES FOR NAVIGATION THROUGH THE JAMAICA BAY STORM SURGE BARRIER.

2. 36" DIA x 3/4" STEEL PIPE PILES. TIP EL -175, TOP EL -45. 9'x9' GRID AT SECTOR GATE ABUTMENTS. 10'x15' GRID AT REMAINING TREMIE SEAL.

US Army Corps of Engineers®

MARK	DESCRIPTION	DATE	APPR.
B	DRAFT for Public Review - NYNJHAT Study TSP Plan Set	09.23.22	MK
A	DRAFT for DOC-NYNJHAT Study - TSP Plan Set	08.26.22	MK

DESIGNED BY: IK | DATE: 09.09.22
DWN BY: | CKD BY: MK | SOLICITATION NO.:
SUBMITTED BY: SA | CONTRACT NO.: 220032-001
PLOT SCALE: AS SHOWN | PLOT DATE: 9/13/2022 | FILE NUMBER:
SIZE: ANSI D | FILE NAME: 220032-CS-602.dgn

U.S. ARMY CORPS OF ENGINEERS
U.S. ARMY ENGINEER DISTRICT
NEW YORK
http://www.nan.usace.army.mil
MOFFATT & NICHOL
529 FIFTH AVE., 14TH FLOOR
NEW YORK, NY 10017
212-768-7454

NEW YORK - NEW JERSEY HARBOR AND TRIBUTARIES COASTAL STORM RISK
TENTATIVELY SELECTED PLAN

JAMAICA BAY PLAN
SECTOR GATES PHASE II

SHEET ID
CS-602
SHEET 62 OF 88

PATH: Q:\BA\220032-01\20 CADD_Active_SheetSet\220032-CS-602.dgn
FILE: 220032-CS-602.dgn
9/13/2022 11:58:35 AM
LAST PLOTTED BY: pvoelker

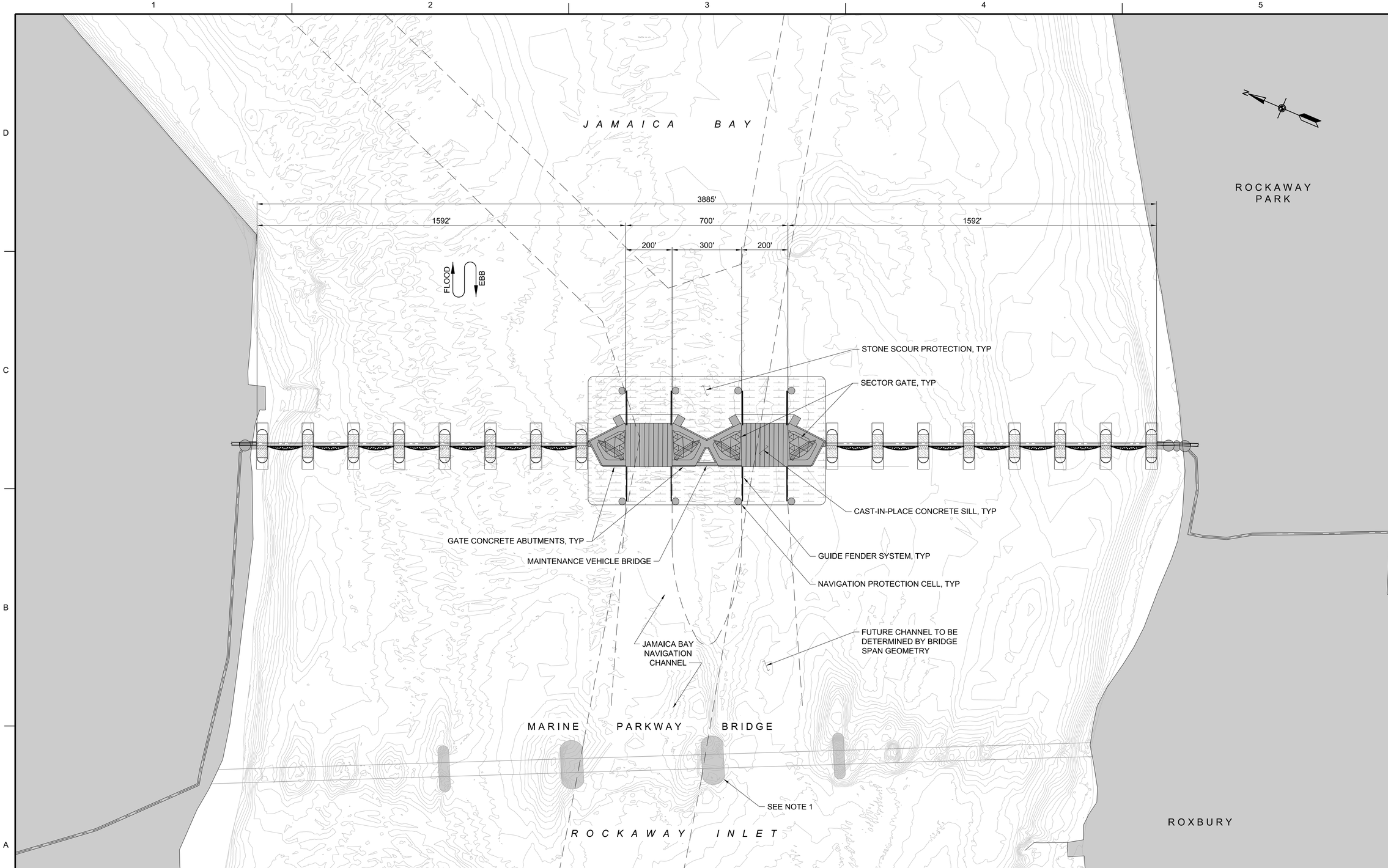

NOTE:

THE MARINE PARKWAY BRIDGE (GIL HODGES MEMORIAL BRIDGE) IS SHOWN IN ITS CURRENT SPAN CONFIGURATION. FOR PURPOSE OF THIS CONCEPT EVALUATION, IT IS ASSUMED THAT THE BRIDGE STRUCTURE WILL BE REPLACED WITH A NEW STRUCTURE WITH AN ALTERNATE SPAN GEOMETRY THAT PROVIDES FOR NAVIGATION THROUGH THE JAMAICA BAY STORM SURGE BARRIER.

200' 0' 200' 400'

SCALE: 1"=200'

US Army Corps of Engineers®

MARK	DESCRIPTION	DATE	APPR.
B	DRAFT for Public Review - NYNJHAT Study TSP Plan Set	09.23.22	MK
A	DRAFT for DOC-NYNJHAT Study - TSP Plan Set	08.26.22	MK

DATE: 09.09.22
SOLICITATION NO.:
CONTRACT NO.: 220032-01
FILE NUMBER:

DESIGNED BY: IK
DWN BY:
CKD BY: MK
SUBMITTED BY: SA
PLOT SCALE: AS SHOWN
PLOT DATE: 9/13/2022
SIZE: ANSI D
FILE NAME: 220032-CS-603.dgn

U.S. ARMY CORPS OF ENGINEERS
U.S. ARMY ENGINEER DISTRICT
NEW YORK
http://www.nan.usace.army.mil

MOFFATT & NICHOL
529 FIFTH AVE., 14TH FLOOR
NEW YORK, NY 10017
212-768-7454

NEW YORK - NEW JERSEY HARBOR AND TRIBUTARIES COASTAL STORM RISK TENTATIVELY SELECTED PLAN

JAMAICA BAY PLAN
SECTOR GATES FULL BUILD OUT

SHEET ID
CS-603

SHEET 63 OF 88

PATH: Q:\BA\220032-01\20 CADD_Active_SheetSet\220032-CS-603.dgn
FILE: 220032-CS-603.dgn
9/13/2022 11:58:37 AM
LAST PLOTTED BY: pvoelker

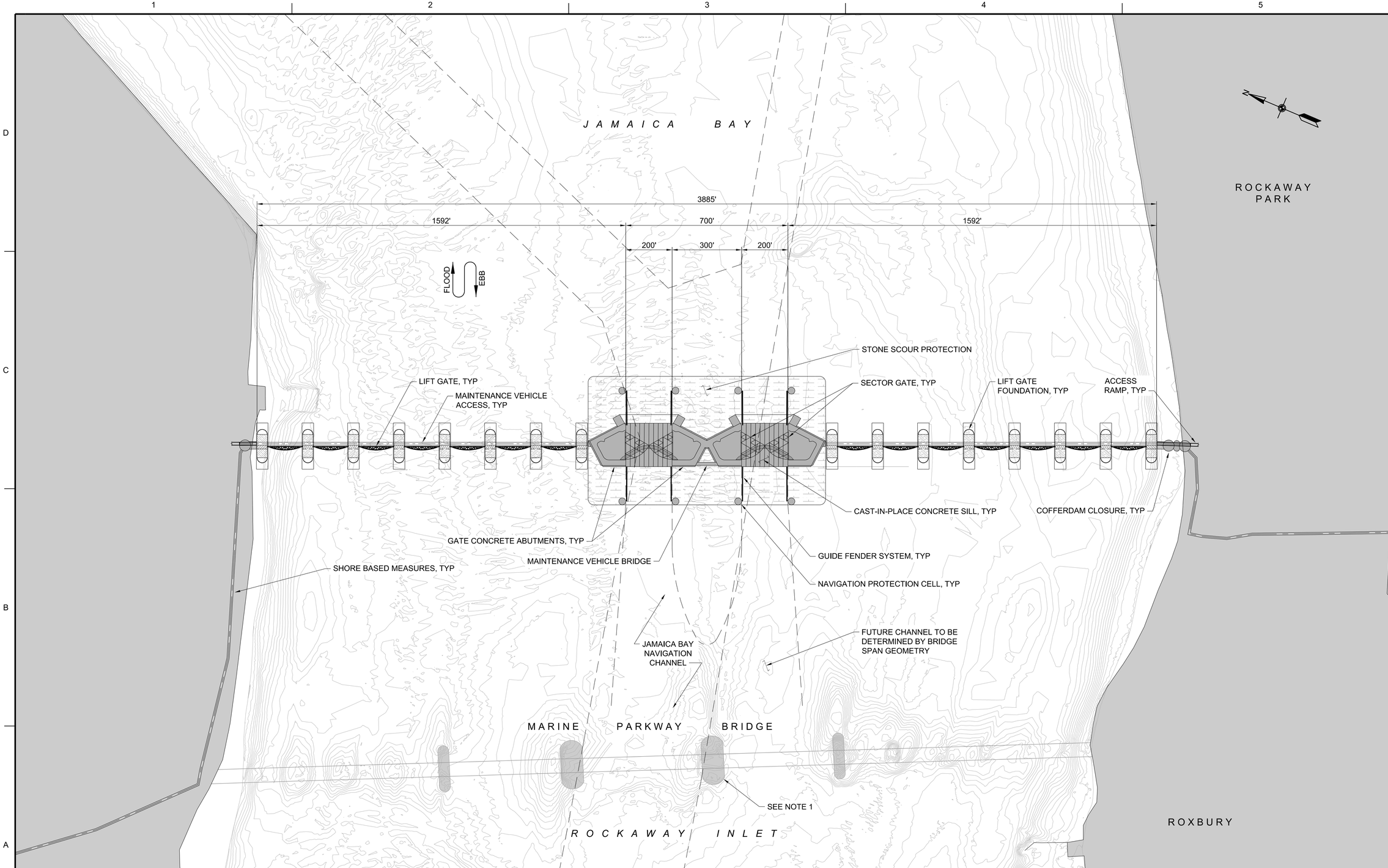

NOTE:

THE MARINE PARKWAY BRIDGE (GIL HODGES MEMORIAL BRIDGE) IS SHOWN IN ITS CURRENT SPAN CONFIGURATION. FOR PURPOSE OF THIS CONCEPT EVALUATION, IT IS ASSUMED THAT THE BRIDGE STRUCTURE WILL BE REPLACED WITH A NEW STRUCTURE WITH AN ALTERNATE SPAN GEOMETRY THAT PROVIDES FOR NAVIGATION THROUGH THE JAMAICA BAY STORM SURGE BARRIER.

200' 0' 200' 400'

SCALE: 1"=200'

US Army Corps of Engineers®

MARK	DESCRIPTION	DATE	APPR.
B	DRAFT for Public Review - NYNJHAT Study TSP Plan Set	09.23.22	MK
A	DRAFT for DOC-NYNJHAT Study - TSP Plan Set	08.26.22	MK

DATE: 09.09.22
SOLICITATION NO.:
CONTRACT NO.: 220032-01
FILE NUMBER:

DESIGNED BY: IK
DWN BY:
CKD BY: MK
SUBMITTED BY: SA
PLOT SCALE: AS SHOWN
PLOT DATE: 9/13/2022
SIZE: ANSI D
FILE NAME: 220032-CS-604.dgn

U.S. ARMY CORPS OF ENGINEERS
U.S. ARMY ENGINEER DISTRICT
NEW YORK
http://www.nan.usace.army.mil

MOFFATT & NICHOL
529 FIFTH AVE., 14TH FLOOR
NEW YORK, NY 10017
212-768-7454

NEW YORK - NEW JERSEY HARBOR AND TRIBUTARIES COASTAL STORM RISK TENTATIVELY SELECTED PLAN

JAMAICA BAY PLAN
SECTOR GATES FLOOD EVENT OR TESTING

SHEET ID
CS-604
SHEET 64 OF 88

PATH: Q:\BA\220032-01\20 CADD_Active_SheetSet\220032-CS-604.dgn
FILE: 220032-CS-604.dgn
9/13/2022 11:58:40 AM
LAST PLOTTED BY: pvoelker

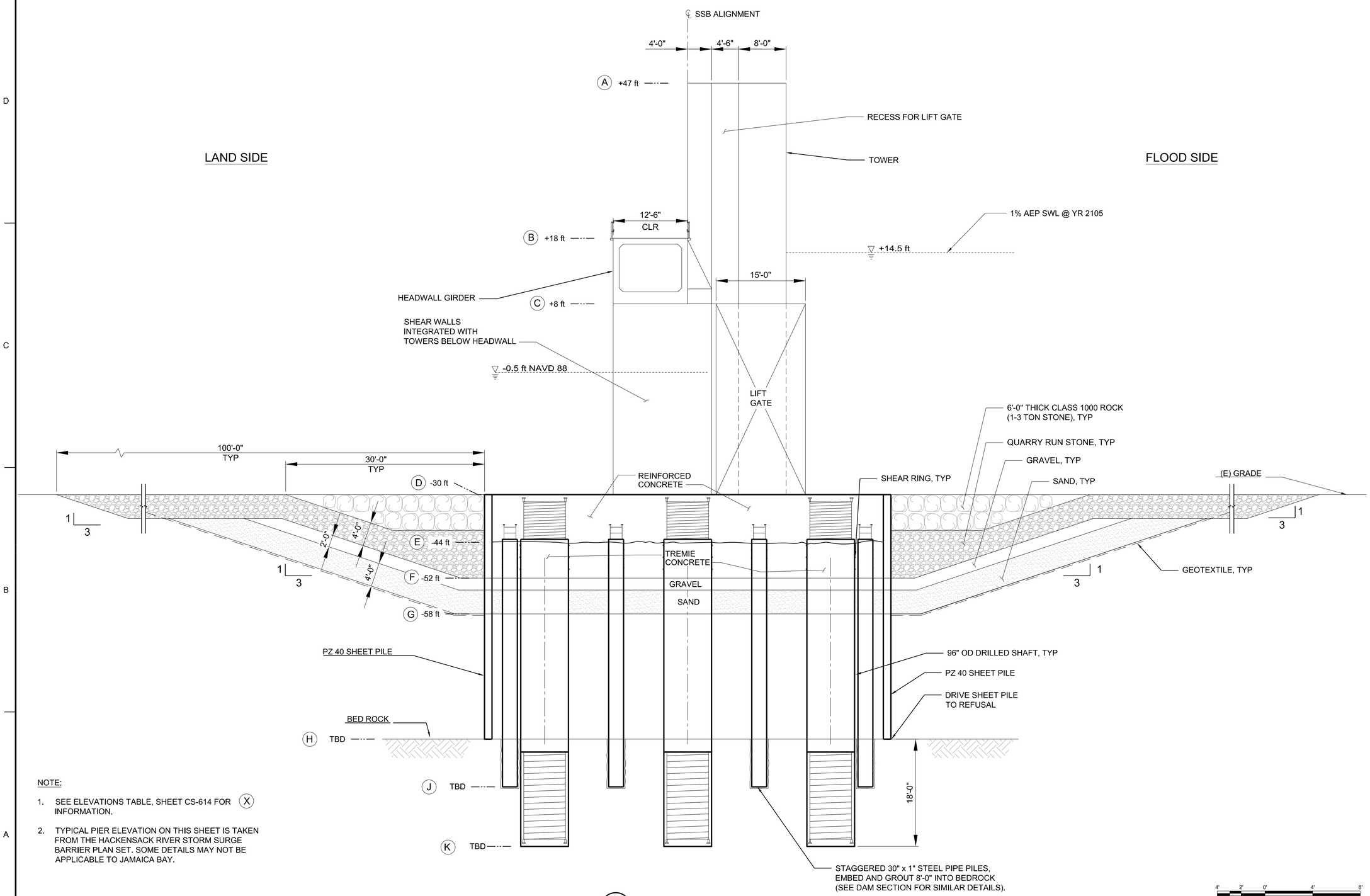

NOTE:

1. SEE ELEVATIONS TABLE, SHEET CS-614 FOR (X) INFORMATION.
2. TYPICAL PIER ELEVATION ON THIS SHEET IS TAKEN FROM THE HACKENSACK RIVER STORM SURGE BARRIER PLAN SET. SOME DETAILS MAY NOT BE APPLICABLE TO JAMAICA BAY.

A2 / CS-605 TYPICAL PIER ELEVATION
SCALE: NTS

PRELIMINARY
NOT FOR CONSTRUCTION

PATH: Q:\BA\220032-01\20 CADD_Active_SheetSet\220032-CS-605.dgn
FILE: 220032-CS-605.dgn
9/13/2022 11:58:42 AM
LAST PLOTTED BY: pvoelker

US Army Corps of Engineers®

MARK	DESCRIPTION	DATE	APPR.
B	DRAFT for Public Review - NYNJHAT Study TSP Plan Set	09.23.22	MK
A	DRAFT for DOC-NYNJHAT Study - TSP Plan Set	08.26.22	MK

U.S. ARMY CORPS OF ENGINEERS
U.S. ARMY ENGINEER DISTRICT
NEW YORK
http://www.nan.usace.army.mil

WF BAIRD & ASSOCIATES
2924 MARKETPLACE DR., STE 200
MADISON, WI 53729

DESIGNED BY: KJ / JB
DWN BY: SNL
CKD BY: M. WOODS
SUBMITTED BY: M.WOODS
PLOT SCALE: AS SHOWN
PLOT DATE: 9/13/2022
SIZE: ANSI D
FILE NAME: 220032-CS-605.dgn
DATE: 09.09.22
SOLICITATION NO.:
CONTRACT NO.: 220032-01
FILE NUMBER:

NEW YORK - NEW JERSEY HARBOR AND TRIBUTARIES COASTAL STORM RISK TENTATIVELY SELECTED PLAN

JAMAICA BAY
PIER ELEVATION

SHEET ID
CS-605
SHEET 65 OF 88

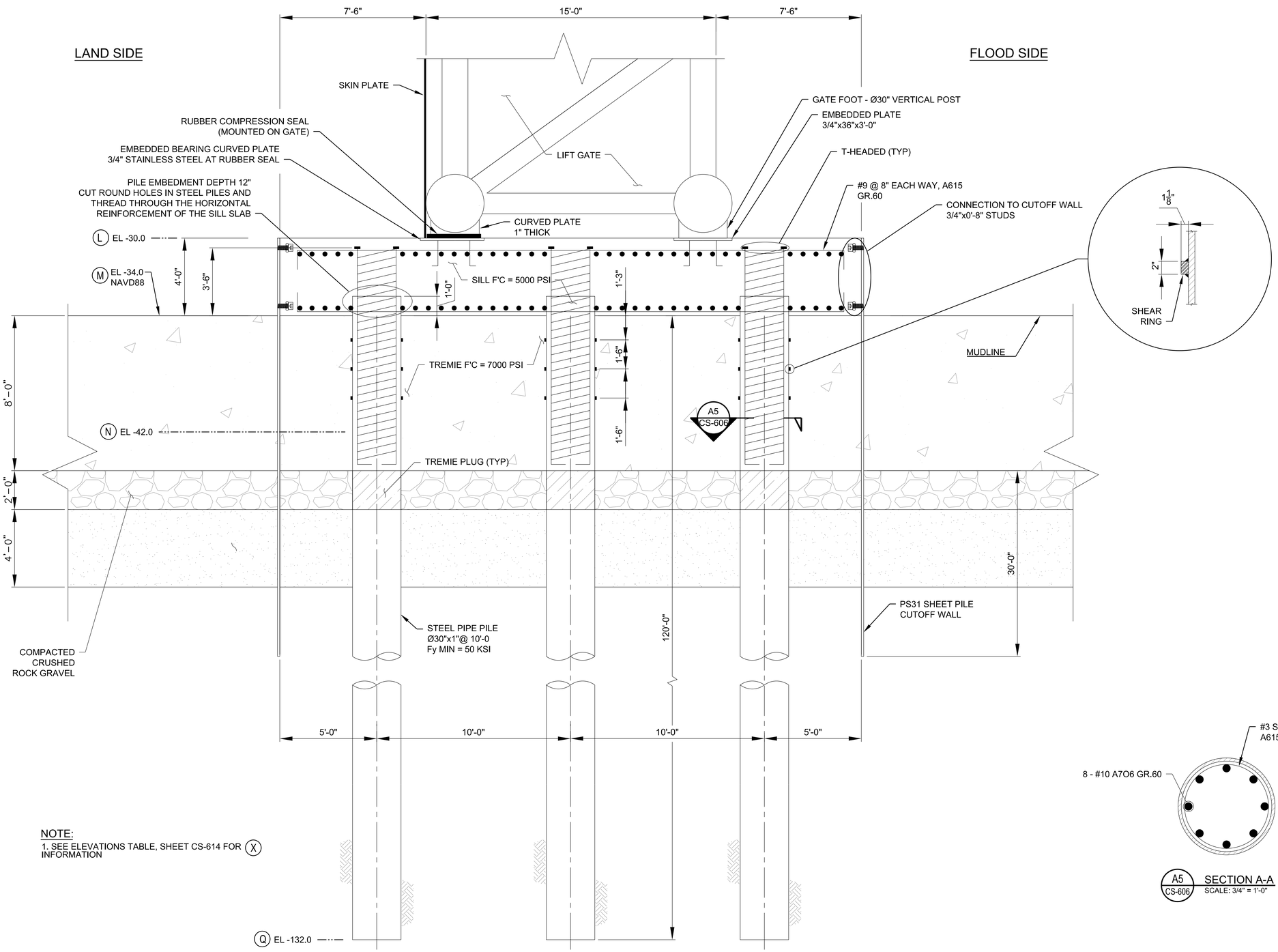

NOTE:
1. SEE ELEVATIONS TABLE, SHEET CS-614 FOR (X) INFORMATION

A2 CS-606 SILL & TREMIE
SCALE: 3/8" = 1'-0"

A5 CS-606 SECTION A-A
SCALE: 3/4" = 1'-0"

PRELIMINARY
NOT FOR CONSTRUCTION

US Army Corps of Engineers®

MARK	DESCRIPTION	DATE	APPR.
B	DRAFT for Public Review - NYNJHAT Study TSP Plan Set	09.23.22	MK
A	DRAFT for DOC-NYNJHAT Study - TSP Plan Set	08.26.22	MK

U.S. ARMY CORPS OF ENGINEERS
U.S. ARMY ENGINEER DISTRICT
NEW YORK
http://www.nan.usace.army.mil

WF BAIRD & ASSOCIATES
2924 MARKETPLACE DR., STE 200
MADISON, WI 53729

DESIGNED BY: KJ / JB
DWN BY: SNL
CKD BY: M. WOODS
SUBMITTED BY: M.WOODS
PLOT SCALE: AS SHOWN
PLOT DATE: 9/13/2022
SIZE: ANSI D
FILE NAME: 220032-CS-606.dgn
DATE: 09/09/22
SOLICITATION NO.:
CONTRACT NO.: 220032-01
FILE NUMBER:

NEW YORK - NEW JERSEY HARBOR AND TRIBUTARIES COASTAL STORM RISK TENTATIVELY SELECTED PLAN

JAMAICA BAY - SILL & TREMIE

SHEET ID
CS-606

SHEET 66 OF 88

PATH: Q:\BA\220032-01\20 CADD_Active_SheetSet\220032-CS-606.dgn
FILE: 220032-CS-606.dgn
9/13/2022 11:58:43 AM
LAST PLOTTED BY: pvoelker

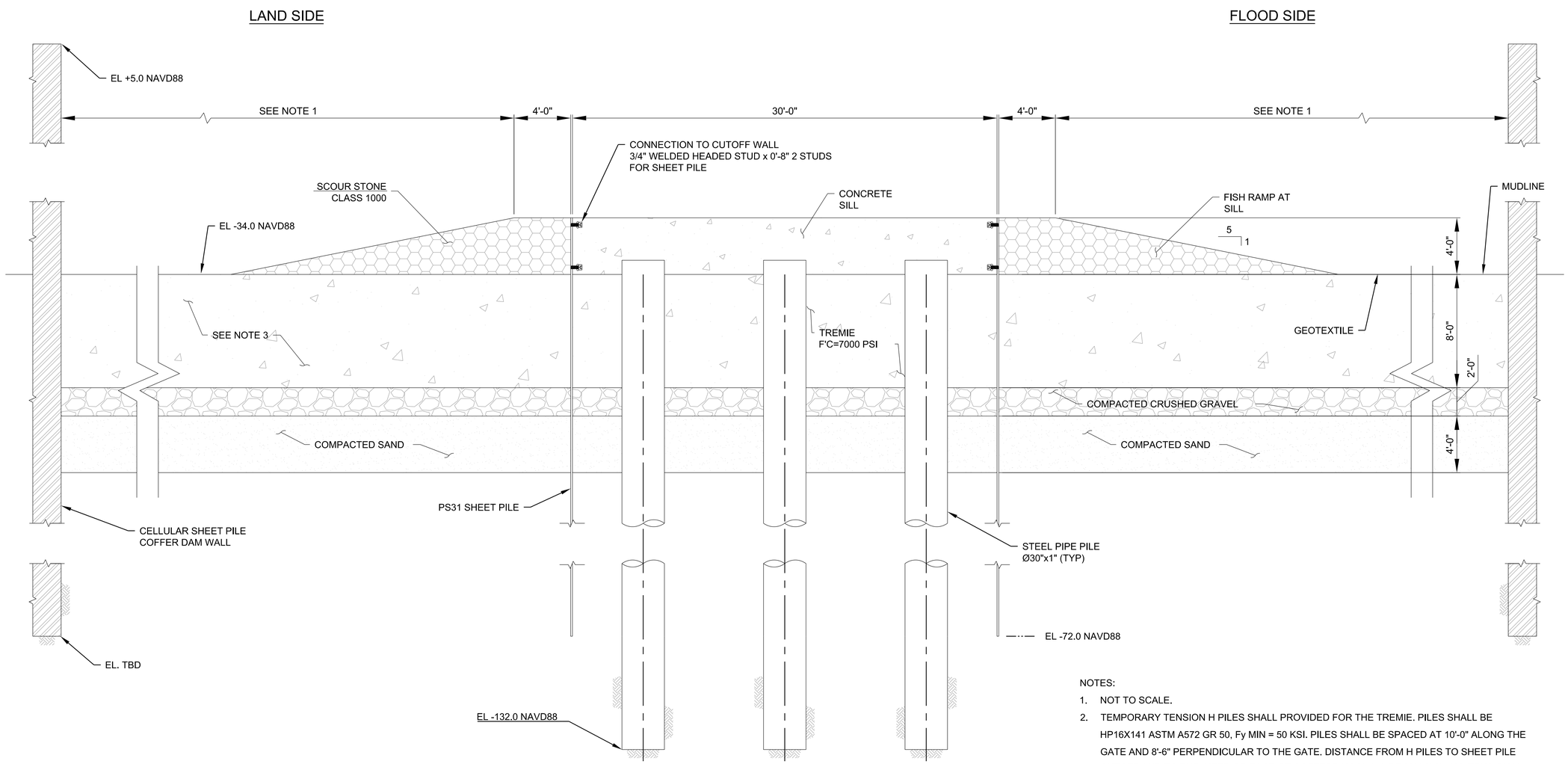

A2 / CS-607 SCOUR STONE AT SILL
SCALE: 1/4" = 1'-0"

NOTES:

1. NOT TO SCALE.
2. TEMPORARY TENSION H PILES SHALL PROVIDED FOR THE TREMIE. PILES SHALL BE HP16X141 ASTM A572 GR 50, Fy MIN = 50 KSI. PILES SHALL BE SPACED AT 10'-0" ALONG THE GATE AND 8'-6" PERPENDICULAR TO THE GATE. DISTANCE FROM H PILES TO SHEET PILE CUTOFF AND TO THE INTERIOR FACE OF COFFERDAM SHALL BE MIN 5'-0". ALL TENSION H PILES SHALL BE SOCKETED TO ROCK.
3. FOR THE CASE OF JAMAICA BAY SILL, H PILES SHALL BE SPACED AT 10'-0" ALONG THE GATE AND 8'-0" PERPENDICULAR TO THE GATE. DISTANCE FROM H PILES TO SHEET PILE CUTOFF AND TO THE INTERIOR FACE OF COFFERDAM SHALL BE MIN 5'-0". ALL TENSION H PILES SHALL BE DRIVEN TO LEVEL EL -167.0 NAVD88

PRELIMINARY
NOT FOR CONSTRUCTION

US Army Corps of Engineers®

MARK	DESCRIPTION	DATE	APPR.
B	DRAFT for Public Review - NY/NJHAT Study TSP Plan Set	09.23.22	MK
A	DRAFT for DQC-NY/NJHAT Study - TSP Plan Set	08.26.22	MK

DESIGNED BY: KJ / JB
DWN BY: SNL
CKD BY: M. WOODS
SUBMITTED BY: M.WOODS
PLOT SCALE: AS SHOWN
PLOT DATE: 9/13/2022
SIZE: ANSI D
FILE NAME: 220032-CS-607.dgn
DATE: 09.09.22
SOLICITATION NO.:
CONTRACT NO.: 220032-01
FILE NUMBER:

U.S. ARMY CORPS OF ENGINEERS
U.S. ARMY ENGINEER DISTRICT
NEW YORK
http://www.nan.usace.army.mil

WF BAIRD & ASSOCIATES
2924 MARKETPLACE DR., STE 200
MADISON, WI 53729

NEW YORK - NEW JERSEY HARBOR AND TRIBUTARIES COASTAL STORM RISK TENTATIVELY SELECTED PLAN

JAMAICA BAY - SCOUR STONE @ SILL

SHEET ID
CS-607

SHEET 67 OF 88

PATH: Q:\BA\220032-01\20 CADD_Active_SheetSet\220032-CS-607.dgn
FILE: 220032-CS-607.dgn
9/13/2022 11:58:44 AM pvoelker
LAST PLOTTED BY:

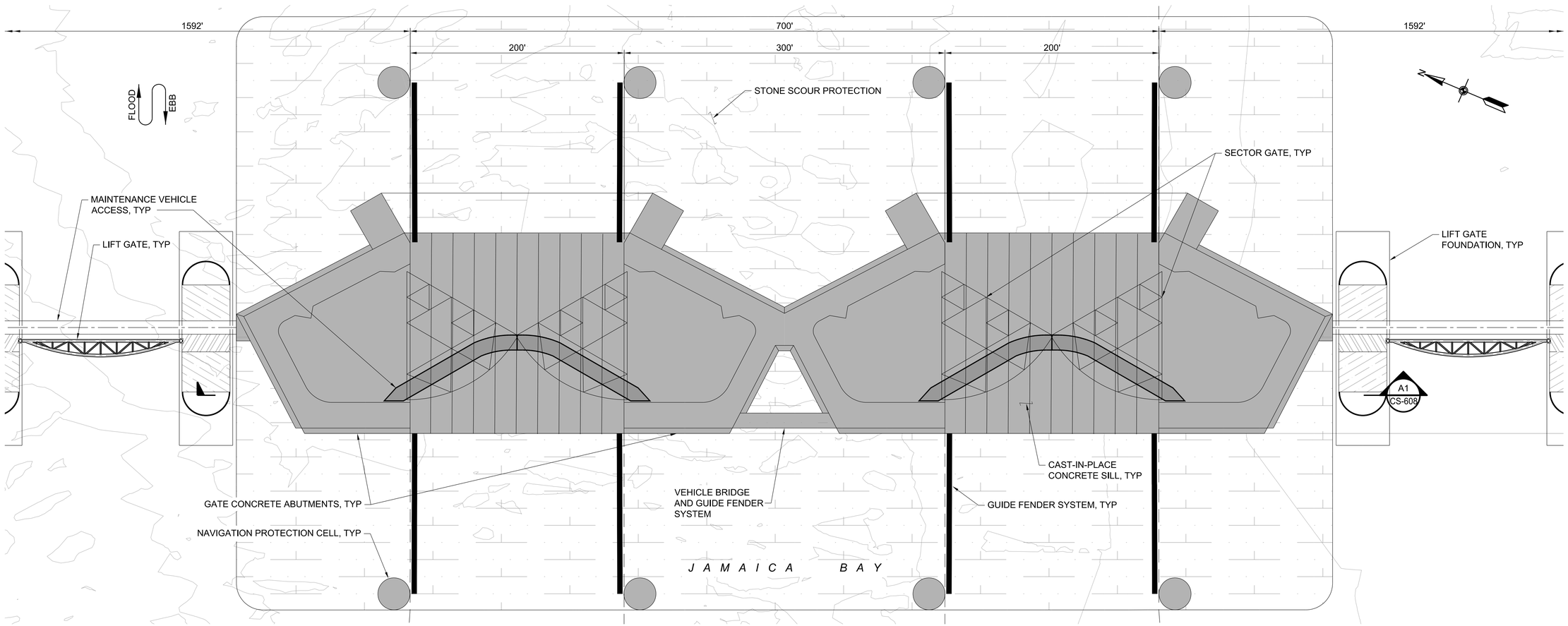

JAMAICA BAY - PARTIAL PLAN - SECTOR GATES

SCALE: 1" = 50'

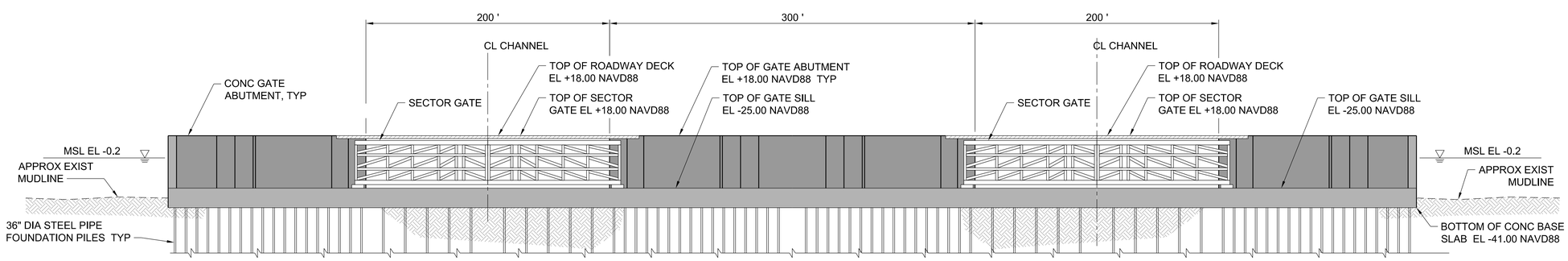

NOTE: LIFT GATES BEYOND NOT SHOWN FOR CLARITY.

A1 CS-608 ELEVATION - SECTOR GATES

SCALE: 1" = 50'

50' 0' 50' 100'

SCALE: 1"=50'

US Army Corps of Engineers®

MARK	DESCRIPTION	DATE	APPR.
B	DRAFT for Public Review - NYNJHAT Study TSP Plan Set	09.23.22	MK
A	DRAFT for DQC-NYNJHAT Study - TSP Plan Set	08.26.22	MK

DESIGNED BY: IK | DATE: 09.09.22
DWN BY: | CKD BY: MK | SOLICITATION NO.:
SUBMITTED BY: SA | CONTRACT NO.: 220032-01
PLOT SCALE: AS SHOWN | PLOT DATE: 9/13/2022 | FILE NUMBER:
SIZE: ANSI D | FILE NAME: 220032-CS-608.dgn

U.S. ARMY CORPS OF ENGINEERS
U.S. ARMY ENGINEER DISTRICT
NEW YORK
http://www.nan.usace.army.mil

MOFFATT & NICHOL
529 FIFTH AVE., 14TH FLOOR
NEW YORK, NY 10017
212-768-7454

NEW YORK - NEW JERSEY HARBOR AND TRIBUTARIES COASTAL STORM RISK TENTATIVELY SELECTED PLAN

JAMAICA BAY PLAN
SECTOR GATE PARTIAL PLAN AND ELEVATION

SHEET ID
CS-608
SHEET 68 OF 88

PATH: Q:\BA\220032-01\20 CADD_Active_SheetSet\220032-CS-608.dgn
FILE: 220032-CS-608.dgn
9/13/2022 11:58:46 AM
LAST PLOTTED BY: pvoelker

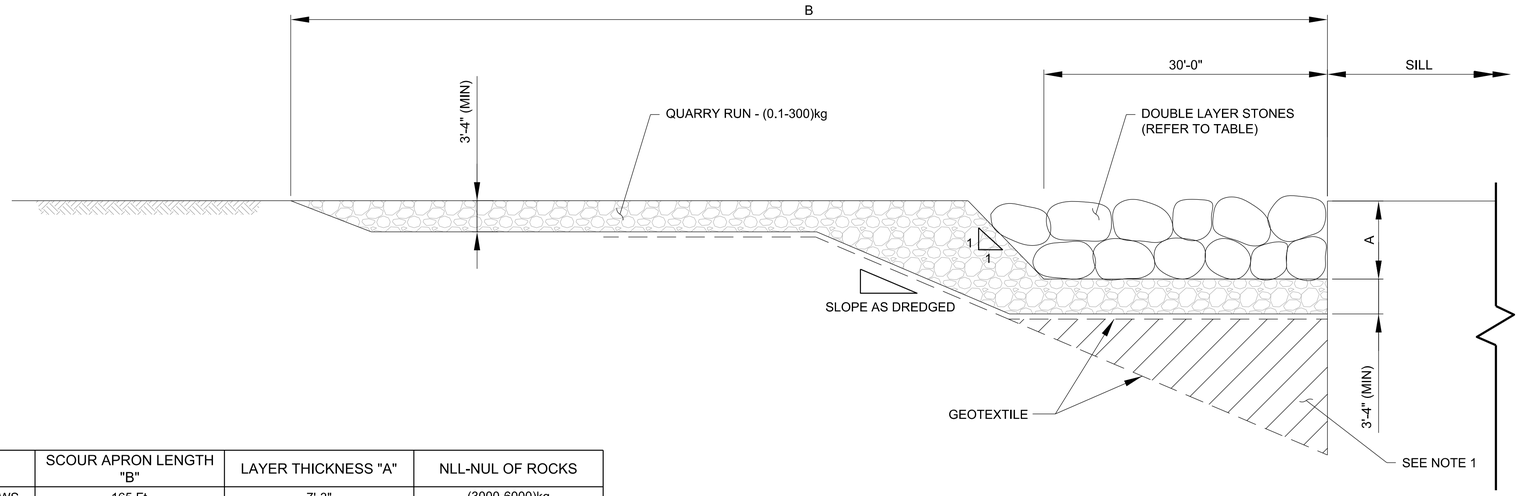

SSB	SCOUR APRON LENGTH "B"	LAYER THICKNESS "A"	NLL-NUL OF ROCKS
VERRAZZANO NARROWS	165 Ft	7'-3"	(3000-6000)kg
JAMAICA BAY	165 Ft	5'-7"	(1000-3000)kg
HACKENSACK RIVER	100 Ft	4'-0"	(300-1000)kg

NOTE:
1. DREDGED AREA TO BE BACKFILLED WITH QUARRY RUN. GEOTEXTILE TO BE PLACED ON DREDGED SLOPE PRIOR TO BACKFILLING.

C2 / CS-609 SCOUR PROTECTION @ LIFT GATES
SCALE: NTS

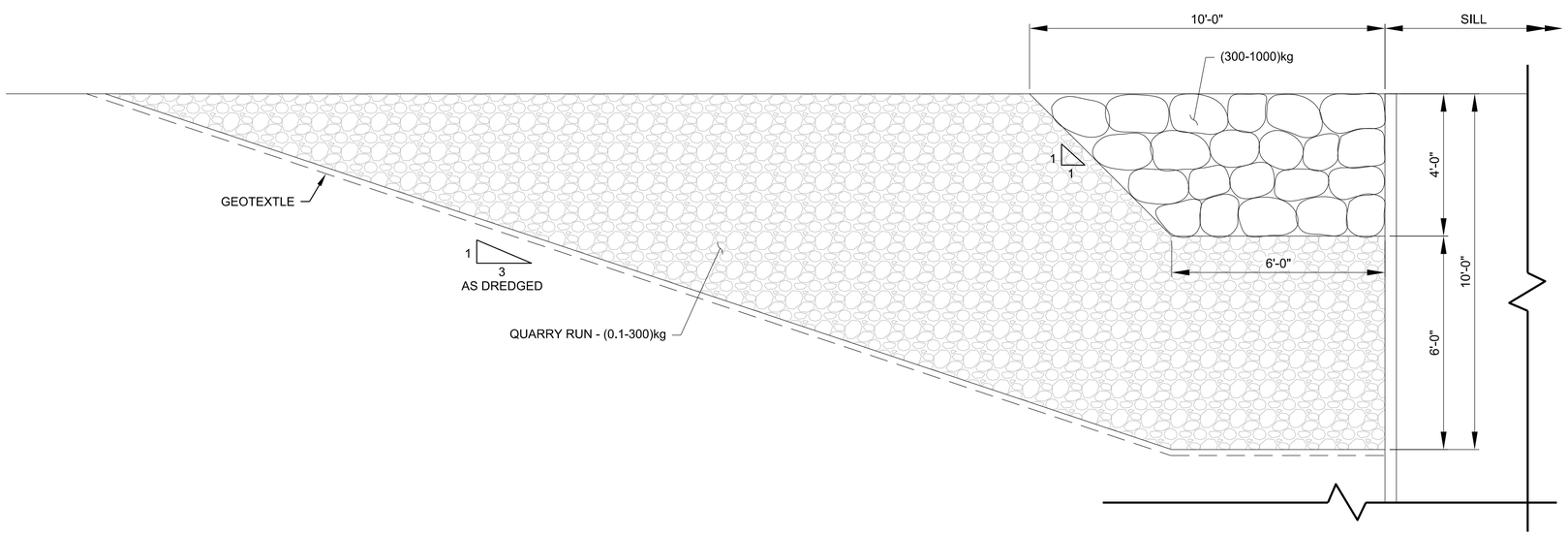

A2 / CS-609 SCOUR PROTECTION @ DAM
SCALE: NTS

PRELIMINARY
NOT FOR CONSTRUCTION

PATH: Q:\BA\220032-01\20 CADD_Active_SheetSet\220032-CS-609.dgn
LAST PLOTTED BY: pvoelker 11:58:46 AM 9/13/2022 FILE: 220032-CS-609.dgn

US Army Corps of Engineers®

MARK	DESCRIPTION	DATE	APPR.
B	DRAFT for Public Review - NYNJHAT Study TSP Plan Set	09.23.22	MK
A	DRAFT for DQC-NYNJHAT Study - TSP Plan Set	08.26.22	MK

U.S. ARMY CORPS OF ENGINEERS
U.S. ARMY ENGINEER DISTRICT
NEW YORK
http://www.nan.usace.army.mil

WF BAIRD & ASSOCIATES
2924 MARKETPLACE DR., STE 200
MADISON, WI 53729

DESIGNED BY: KJ / JB
DWN BY: SNL
CKD BY: M. WOODS
SUBMITTED BY: M.WOODS
PLOT SCALE: AS SHOWN
PLOT DATE: 9/13/2022
DATE: 09/08/22
SOLICITATION NO.:
CONTRACT NO.: 220032-01
FILE NUMBER:
SIZE: ANSI D
FILE NAME: 220032-CS-609.dgn

NEW YORK - NEW JERSEY HARBOR AND TRIBUTARIES COASTAL STORM RISK TENTATIVELY SELECTED PLAN

JAMAICA BAY
SCOUR PROTECTION DETAILS

SHEET ID
CS-609
SHEET 69 OF 88

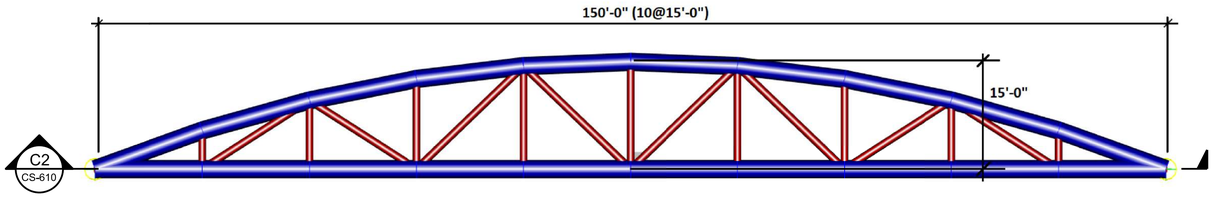

D2 CS-610 VERTICAL LIFT GATE - PLAN
SCALE: NTS

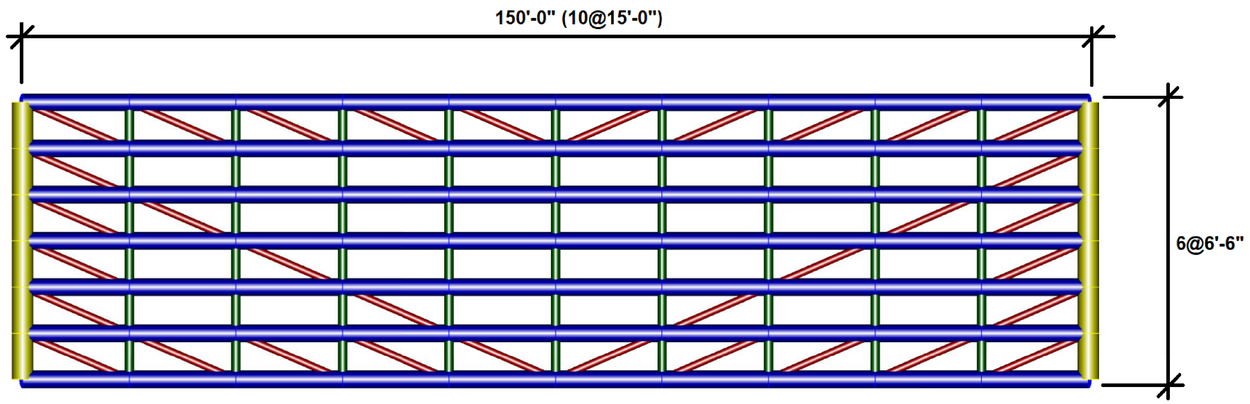

C2 CS-610 VERTICAL LIFT GATE - ELEVATION
SCALE: NTS

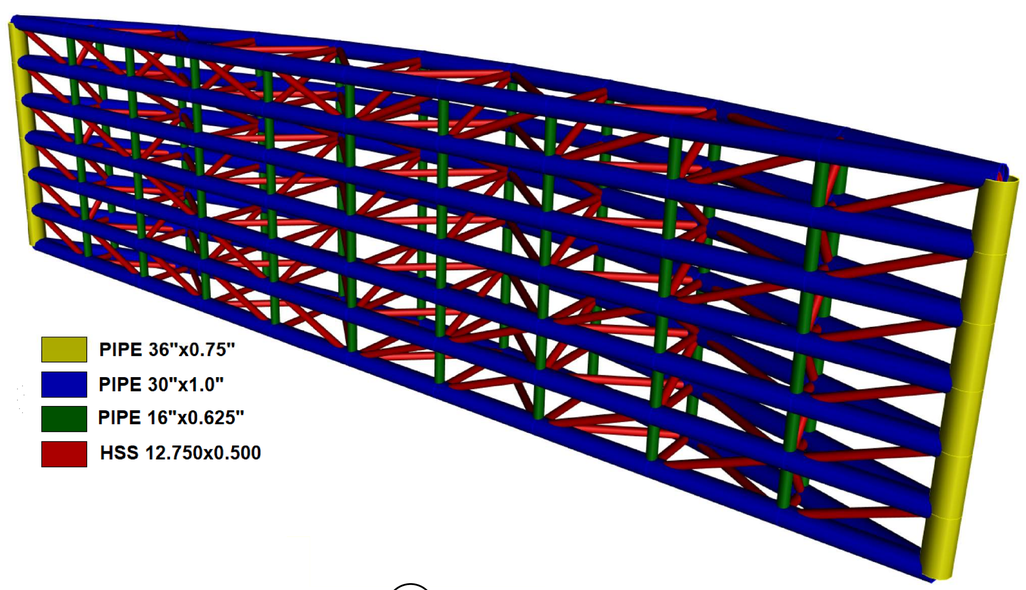

A2 CS-610 VERTICAL LIFT GATE - ISOMETRIC
SCALE: NTS

NOTES:

1. SKIN PLATE: 3/8"X67"X15'-0" PLATE WITH INTERCOSTALS L4"X4"X5/16" AT 2'-4" (ORIENTED ON THE SHORT SIDE). WEIGHT PER AREA: 19 LBF/SQFT. SKIN PLATE LOCATED AT STRAIGHT CHORD OF THE TRUSS. STRAIGHT CHORD IS LOCATED ON LANDSIDE.
2. STEEL SECTIONS: ASTM A572 GR 50 OR ENGINEER-APPROVED EQUIVALENT OR BETTER.
3. FRACTURE CRITICAL MEMBERS: THE ONLY ELEMENTS SUBJECT TO BE FRACTURE CRITICAL MEMBERS (FCM) ARE THE LIFTING EYES OF THE GATE USED FOR INSTALLATION (NOT INCLUDED AT THIS LEVEL OF DESIGN). NO OTHER ELEMENT IS CONSIDERED AS FCM, SINCE CRITICAL ELEMENTS (CURVED CHORDS OF THE TRUSSES) ARE IN COMPRESSION FOR THE CRITICAL CASES AND ADDITIONALLY, FAILURE OF THESE ELEMENTS DOES NOT IMPLY COLLAPSE OF THE GATE.
4. TOTAL WEIGHT: 1063 KIP.
5. COUNTERWEIGHTS (CTWT.) ARE ASSUMED TO BE STACKS OF 1 OR 2" STEEL PLATE.
6. IT IS ANTICIPATED THAT CTWT. WILL REQUIRE EITHER A CTWT. PIT BELOW EL. 0 OR WILL REQUIRE A PULLEY SYSTEM TO ALLOW 1" OF VERT. CTWT. TRAVEL FOR MORE THAN 1" OF VERT. GATE TRAVEL.

PRELIMINARY
NOT FOR CONSTRUCTION

PATH: Q:\BA\220032-01\20 CADD_Active_SheetSet\220032-CS-610.dgn
FILE: 220032-CS-610.dgn
9/13/2022 11:58:47 AM pvoelker
LAST PLOTTED BY:

US Army Corps of Engineers®

MARK	DESCRIPTION	DATE	APPR.
B	DRAFT for Public Review - NY/NJHAT Study TSP Plan Set	09.23.22	MK
A	DRAFT for DOC-NY/NJHAT Study - TSP Plan Set	08.26.22	MK

DESIGNED BY: KJ / JB
DATE: 09.09.22
DWN BY: SNL
CKD BY: M. WOODS
SOLICITATION NO.:
SUBMITTED BY: M.WOODS
CONTRACT NO.: 220032-01
PLOT SCALE: AS SHOWN
PLOT DATE: 9/13/2022
FILE NUMBER:
SIZE: ANSI D
FILE NAME: 220032-CS-610.dgn

U.S. ARMY CORPS OF ENGINEERS
U.S. ARMY ENGINEER DISTRICT
NEW YORK
http://www.nan.usace.army.mil

WF BAIRD & ASSOCIATES
2924 MARKET PLACE DR., STE 200
MADISON, WI 53729

NEW YORK - NEW JERSEY HARBOR AND TRIBUTARIES COASTAL STORM RISK TENTATIVELY SELECTED PLAN

JAMAICA BAY
GATE PLAN & PROFILE

SHEET ID
CS-610
SHEET 70 OF 88

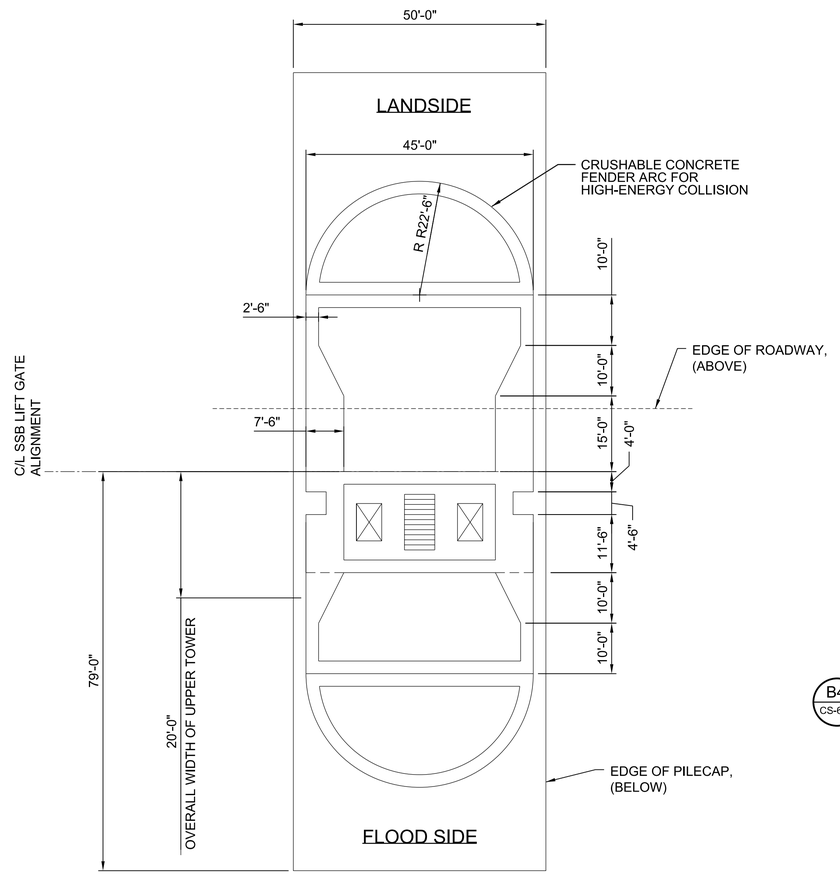

A2 CS-611 LOWER TOWER SECTION - (FROM TOP OF PILE CAP TO EL. +8.0)
SCALE: NTS

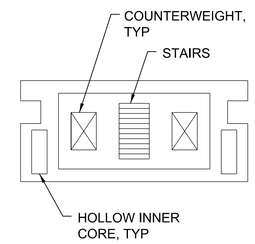

B4 CS-611 UPPER TOWER SECTION
SCALE: NTS

PRELIMINARY
NOT FOR CONSTRUCTION

PATH: Q:\BA\220032-01\20 CADD_Active_SheetSet\220032-CS-611.dgn
LAST PLOTTED BY: pvoelker 11:58:51 AM 9/13/2022 FILE: 220032-CS-611.dgn

US Army Corps of Engineers®

MARK	DESCRIPTION	DATE	APPR.
B	DRAFT for Public Review - NY/NJHAT Study TSP Plan Set	09.23.22	MK
A	DRAFT for DOC-NY/NJHAT Study - TSP Plan Set	08.26.22	MK

U.S. ARMY CORPS OF ENGINEERS
U.S. ARMY ENGINEER DISTRICT
NEW YORK
http://www.nan.usace.army.mil

WF BAIRD & ASSOCIATES
2924 MARKETPLACE DR., STE 200
MADISON, WI 53729

DESIGNED BY: KJ / JB
DWN BY: SNL
CKD BY: M. WOODS
SUBMITTED BY: M.WOODS
PLOT SCALE: AS SHOWN
PLOT DATE: 9/13/2022
SIZE: ANSI D
FILE NAME: 220032-CS-611.dgn
DATE: 09/08/22
SOLICITATION NO.:
CONTRACT NO.: 220032-01
FILE NUMBER:

NEW YORK - NEW JERSEY HARBOR AND TRIBUTARIES COASTAL STORM RISK TENTATIVELY SELECTED PLAN

JAMAICA BAY
PIER TOWER DETAILS

SHEET ID
CS-611
SHEET 71 OF 88

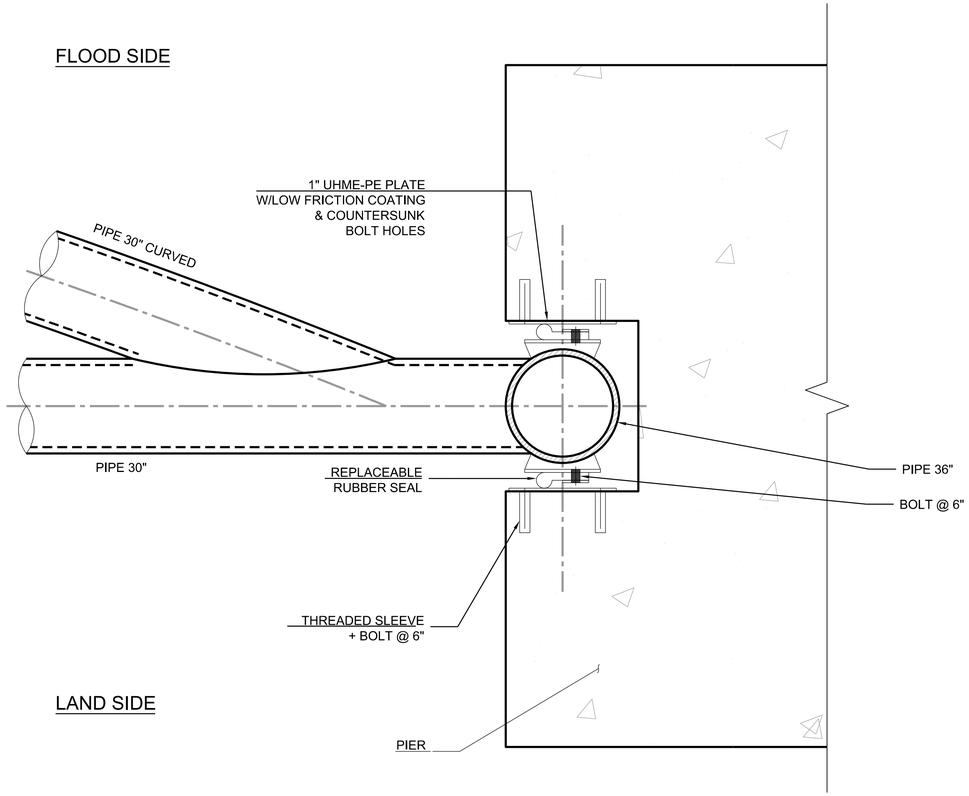

B1 CS-612 GATE RECESS AT PIER DETAIL
SCALE: 1/2" = 1'-0"

PRELIMINARY
NOT FOR CONSTRUCTION

US Army Corps of Engineers®

MARK	DESCRIPTION	DATE	APPR.
B	DRAFT for Public Review - NY/NJ/HAT Study TSP Plan Set	09.23.22	MK
A	DRAFT for DOC-NY/NJ/HAT Study - TSP Plan Set	08.26.22	MK

U.S. ARMY CORPS OF ENGINEERS
U.S. ARMY ENGINEER DISTRICT
NEW YORK
http://www.nan.usace.army.mil

WF BAIRD & ASSOCIATES
2924 MARKET PLACE DR., STE 200
MADISON, WI 53729

DESIGNED BY: KJ / JB
DWN BY: SNL
CKD BY: M. WOODS
SUBMITTED BY: M.WOODS
PLOT SCALE: AS SHOWN
PLOT DATE: 9/13/2022
SIZE: ANSI D
FILE NAME: 220032-CS-612.dgn
DATE: 09.09.22
SOLICITATION NO.:
CONTRACT NO.: 220032-01
FILE NUMBER:

NEW YORK - NEW JERSEY HARBOR AND TRIBUTARIES COASTAL STORM RISK TENTATIVELY SELECTED PLAN

JAMAICA BAY
GATE DETAIL

SHEET ID
CS-612

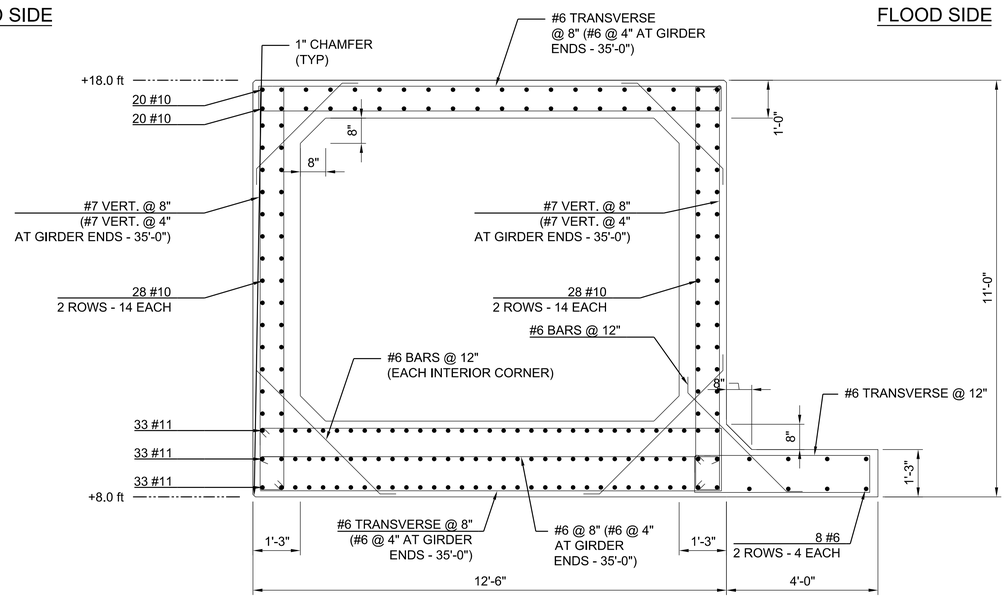

NOTE:
1. FACE-MOUNTED VEHICLE GUARDRAIL AT EACH FACE (NOT SHOWN).
2. 10 FT SPACING BETWEEN BUTTRESSES.

B2 / CS-613 TYPICAL SECTION
SCALE: 1/2" = 1'-0"

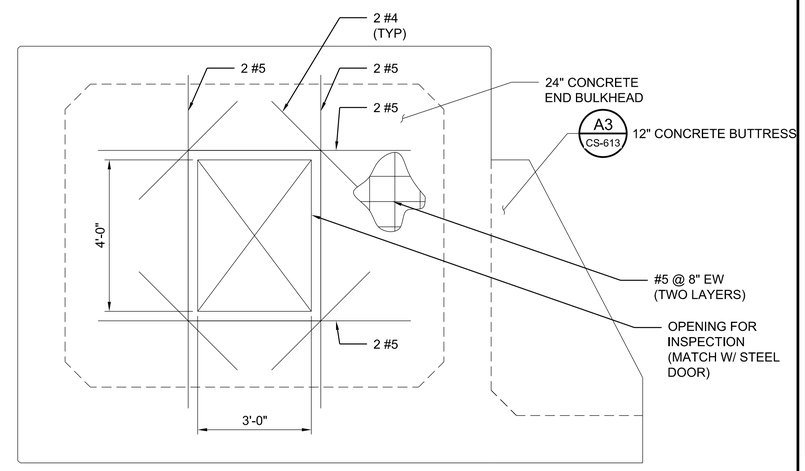

B4 / CS-613 CROSS SECTION AT HEADWALL END
SCALE: 1/2" = 1'-0"

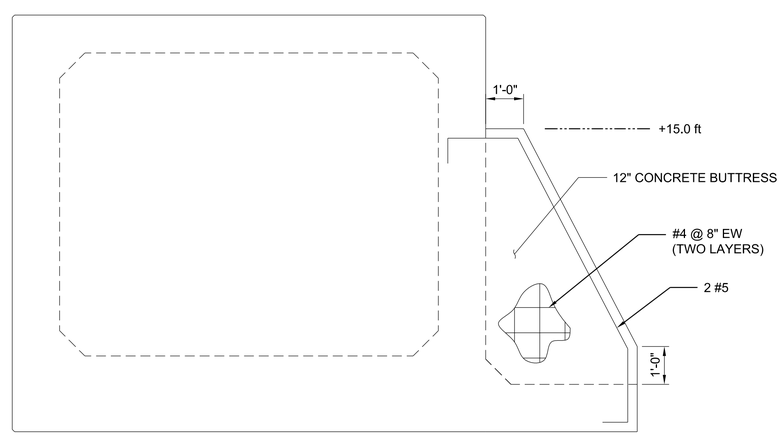

A3 / CS-613 TYPICAL BUTTRESS REINFORCEMENT DETAIL
SCALE: 1/2" = 1'-0"

2' 1' 0' 2' 4'
SCALE: 1/2" = 1'-0"

PRELIMINARY
NOT FOR CONSTRUCTION

US Army Corps of Engineers®

MARK	DESCRIPTION	DATE	APPR.
B	DRAFT for Public Review - NYNJHAT Study TSP Plan Set	09.23.22	MK
A	DRAFT for DOC-NYNJHAT Study - TSP Plan Set	08.26.22	MK

U.S. ARMY CORPS OF ENGINEERS
U.S. ARMY ENGINEER DISTRICT
NEW YORK
http://www.nan.usace.army.mil

WF BAIRD & ASSOCIATES
2924 MARKETPLACE DR., STE 200
MADISON, WI 53729

DESIGNED BY: KJ / JB
DWN BY: SNL
CKD BY: M. WOODS
SUBMITTED BY: M.WOODS
PLOT SCALE: AS SHOWN
PLOT DATE: 9/13/2022
SIZE: ANSI D
FILE NAME: 220032-CS-613.dgn
DATE: 09/08/22
SOLICITATION NO.:
CONTRACT NO.: 220032-01
FILE NUMBER:

NEW YORK - NEW JERSEY HARBOR AND TRIBUTARIES COASTAL STORM RISK TENTATIVELY SELECTED PLAN

JAMAICA BAY
PIER TOWER DETAILS

SHEET ID
CS-613

SHEET 73 OF 88

PATH: Q:\BA\220032-01\20 CADD_Active_SheetSet\220032-CS-613.dgn
FILE: 220032-CS-613.dgn
9/13/2022 11:58:52 AM pvoelker
LAST PLOTTED BY:

JAMAICA BAY AUXILIARY GATE ELEVATIONS AND HEIGHTS																
PIER	SILL	A	B	C	D	E	F	G	H	J	K	L	M	N	P	Q
1	1	32.0	+18.0	+8.0	-15.0	-29.0	-37.0	-43.0	TBD	TBD	TBD	-15.0	-19.0	-27.0	TBD	-117.0
2-4	2-4	37.0	+18.0	+8.0	-20.0	-34.0	-42.0	-48.0	TBD	TBD	TBD	-20.0	-24.0	-32.0	TBD	-122.0
5-8	5-7	47.0	+18.0	+8.0	-30.0	-44.0	-52.0	-58.0	TBD	TBD	TBD	-30.0	-34.0	-42.0	TBD	-132.0
9-16	8-14	42.0	+18.0	+8.0	-25.0	-39.0	-47.0	-53.0	TBD	TBD	TBD	-25.0	-29.0	-37.0	TBD	-127.0

NOTES:
1. SEE SHEETS CS-605 & CS-606 FOR LETTER DEFINITIONS.
2. IT IS ANTICIPATED THAT THERE WILL BE A STEEL-FRAMED MACHINE HOUSE ON TOP OF EACH PIER, WHOSE ROOF WILL BE 20 TO 25 FEET ABOVE “A”, THE TOP OF CONCRETE TOWER ELEVATION. IT IS ASSUMED THAT EACH MACHINE HOUSE WILL CONTAIN APPROXIMATELY 15-FOOT DIAMETER SHEAVES.

PRELIMINARY
NOT FOR CONSTRUCTION

US Army Corps of Engineers®

MARK	DESCRIPTION	DATE	APPR.
B	DRAFT for Public Review - NYNJHAT Study TSP Plan Set	09.23.22	MK
A	DRAFT for DQC-NYNJHAT Study - TSP Plan Set	08.26.22	MK

U.S. ARMY CORPS OF ENGINEERS
U.S. ARMY ENGINEER DISTRICT
NEW YORK
http://www.nan.usace.army.mil

WF BAIRD & ASSOCIATES
2924 MARKETPLACE DR., STE 200
MADISON, WI 53729

DESIGNED BY: KJ / JB
DWN BY: SNL
CKD BY: M. WOODS
SUBMITTED BY: M.WOODS
PLOT SCALE: AS SHOWN
PLOT DATE: 09/13/2022
SIZE: ANSI D
FILE NAME: 220032-CS-614.dgn
DATE: 09/08/22
SOLICITATION NO.:
CONTRACT NO.: 220032-01
FILE NUMBER:

NEW YORK - NEW JERSEY HARBOR AND TRIBUTARIES COASTAL STORM RISK TENTATIVELY SELECTED PLAN

JAMAICA BAY
ELEVATIONS SCHEDULES

SHEET ID
CS-614

PATH: Q:\BA\220032-01\20 CADD_Active_SheetSet\220032-CS-614.dgn
LAST PLOTTED BY: pvoelker 11:58:53 AM 9/13/2022 FILE: 220032-CS-614.dgn

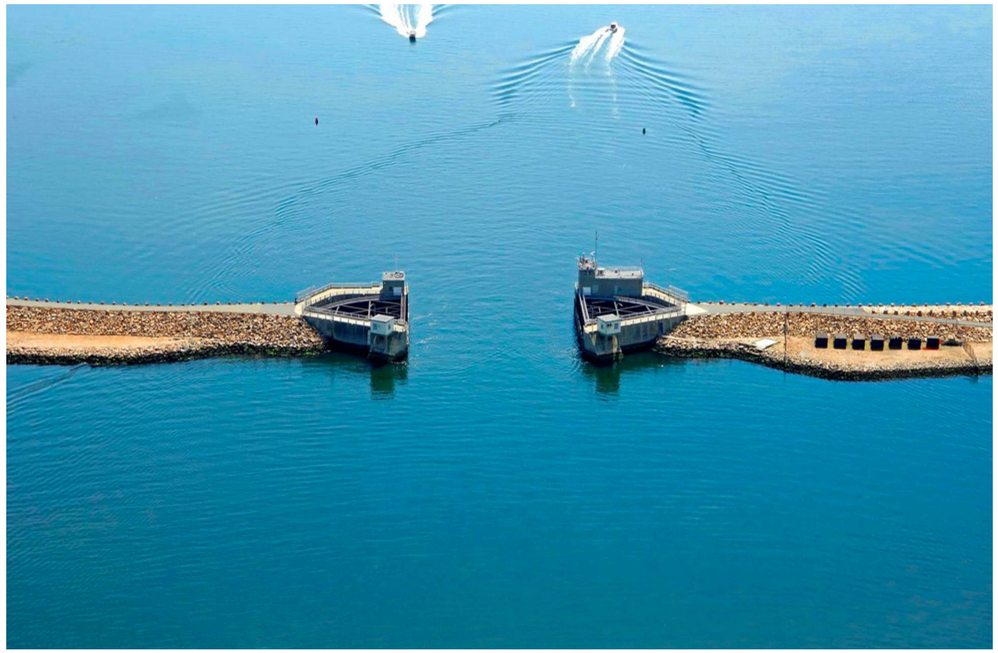

C1 CS-615 PHOTO REFERENCE - SECTOR GATES
SCALE: NTS

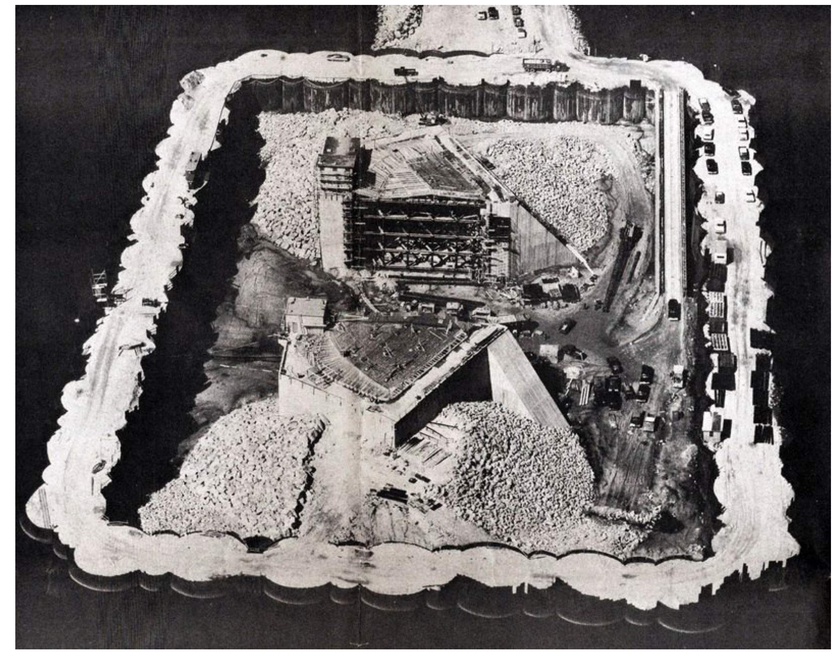

C4 CS-615 PHOTO REFERENCE - COFFERDAMS AND FILL
SCALE: NTS

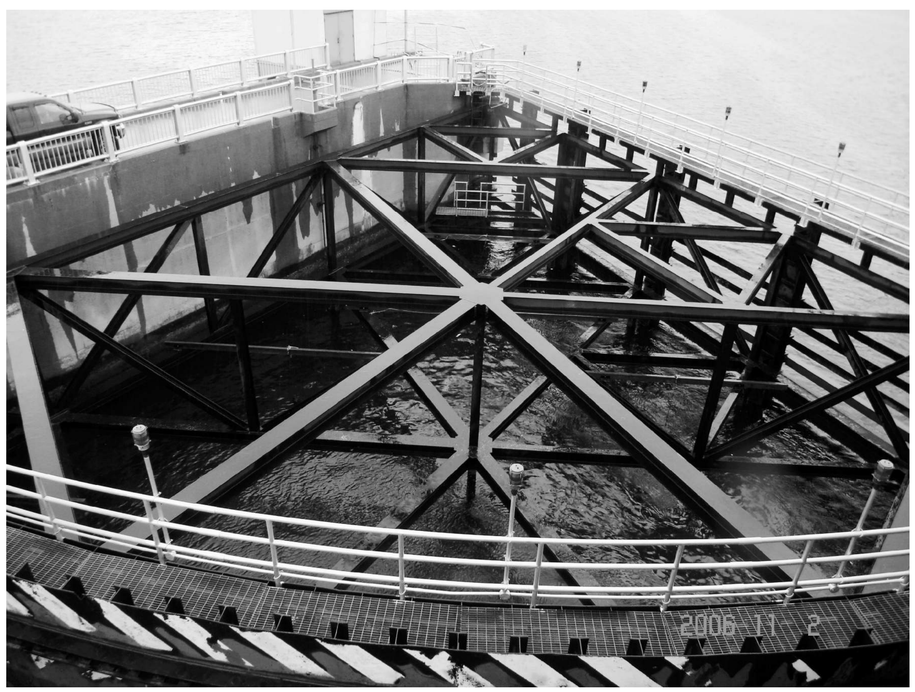

A1 CS-615 PHOTO REFERENCE - GATE BRACING
SCALE: NTS

PRELIMINARY
NOT FOR CONSTRUCTION

PATH: Q:\BA\220032-01\20 CADD_Active_SheetSet\220032-CS-615.dgn
LAST PLOTTED BY: pvoelker 11:58:54 AM 9/13/2022 FILE: 220032-CS-615.dgn

US Army Corps of Engineers®

MARK	DESCRIPTION	DATE	APPR.
B	DRAFT for Public Review - NY/NJ/HAT Study TSP Plan Set	09.23.22	MK
A	DRAFT for DQC-NY/NJ/HAT Study - TSP Plan Set	08.26.22	MK

U.S. ARMY CORPS OF ENGINEERS
U.S. ARMY ENGINEER DISTRICT
NEW YORK
http://www.nan.usace.army.mil
MOFFATT & NICHOL
529 FIFTH AVE., 14TH FLOOR
NEW YORK, NY 10017
212-768-7454

DESIGNED BY: IK
DWN BY:
CKD BY: MK
SUBMITTED BY: SA
PLOT SCALE: AS SHOWN
PLOT DATE: 9/13/2022
SIZE: ANSI D
FILE NAME: 220032-CS-615.dgn
DATE: 09.09.22
SOLICITATION NO.:
CONTRACT NO.: 220032-01
FILE NUMBER:

NEW YORK - NEW JERSEY HARBOR AND TRIBUTARIES COASTAL STORM RISK TENTATIVELY SELECTED PLAN

JAMAICA BAY
PHOTO REFERENCE SECTOR GATE

SHEET ID
CS-615
SHEET 75 OF 88

ARTHUR KILL STORM SURGE BARRIER

(LOOKING NORTH, GATES IN THE CLOSED POSITION)

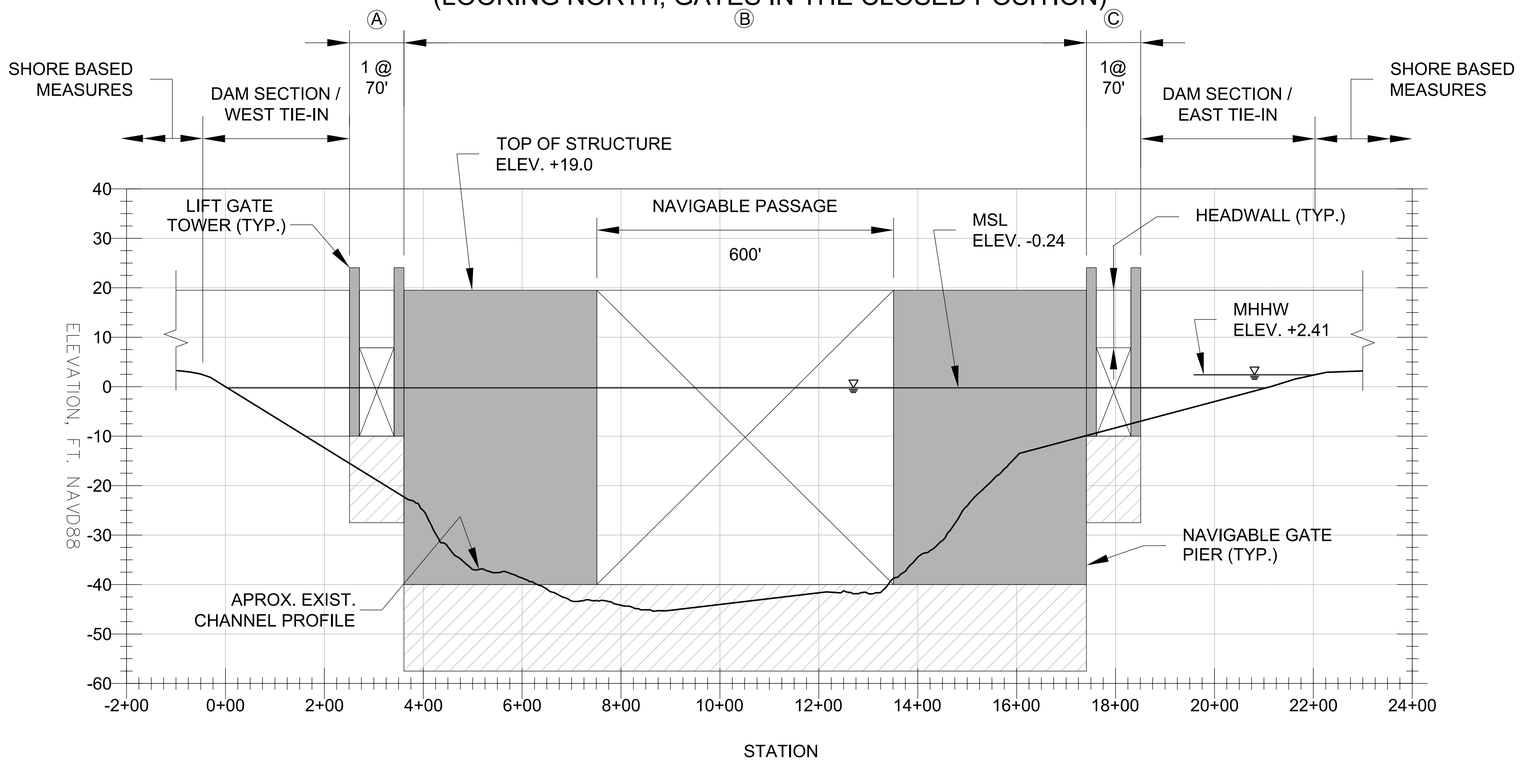

LEGEND:

Ⓐ GATE STRUCTURE SERIES (PER STORM SURGE BARRIER SUB APPENDIX, TABLES SECTION 6) - SEE NOTE 2.

☒ GATE IN CLOSED POSITION

☐ GATE SILL AND FOUNDATION (TBD)

NOTES:

1. THIS ELEVATION VIEW SHOWS A CONCEPTUAL GEOMETRIC DESIGN. THIS PRELIMINARY DEPICTION OF THE GEOMETRY OF THE NAVIGABLE PASSAGES, AUXILIARY FLOW GATES AND STORM SURGE BARRIER CONFIGURATION SHALL NOT BE CONSTRUED AS RECOMMENDATIONS OR REQUIREMENTS FOR ACTUAL DESIGN FOR IMPLEMENTATION. SIGNIFICANT ADDITIONAL STUDY IS REQUIRED TO SUBSTANTIATE THE CONCEPTUAL DESIGN OF THIS STORM SURGE BARRIER.

2. GATE SERIES ARE LABELED AS N@X FT, WHERE N IS NUMBER OF GATES AND X IS CLEAR DISTANCES BETWEEN PIERS (UNLESS OTHERWISE NOTED).

3. EXISTING FLOW AREA WITHOUT STORM SURGE BARRIER EQUALS 53,900 SF. WITH THE STRUCTURE IN PLACE THE FLOW AREA EQUALS 25,200 SF. (47% OF EXISTING).

PRELIMINARY
NOT FOR CONSTRUCTION

US Army Corps of Engineers®

MARK	DESCRIPTION	DATE	APPR.
B	DRAFT for Public Review - NYNJHAT Study TSP Plan Set	09.23.22	MK
A	DRAFT for DQC-NYNJHAT Study - TSP Plan Set	08.26.22	MK

U.S. ARMY CORPS OF ENGINEERS
U.S. ARMY ENGINEER DISTRICT
NEW YORK
http://www.nan.usace.army.mil
MOFFATT & NICHOL
529 FIFTH AVE., 14TH FLOOR
NEW YORK, NY 10017
212-768-7454

DESIGNED BY: IK | DATE: 09.09.22
DWN BY: AA | CKD BY: MK | SOLICITATION NO.:
SUBMITTED BY: SA | CONTRACT NO.: 220032-01
PLOT SCALE: AS SHOWN | PLOT DATE: 9/15/2022 | FILE NUMBER:
PLOT SIZE: ANSI D | FILE NAME: 220032-CS-701.dgn

NEW YORK - NEW JERSEY HARBOR AND TRIBUTARIES COASTAL STORM RISK TENTATIVELY SELECTED PLAN

ARTHUR KILL SSB ELEVATION

SHEET ID
CS-701
SHEET 76 OF 88

PATH: \\mne.net\Projects\BA\220032-01\20 CADD_Active_SheetSet\220032-CS-701.dgn
FILE: 220032-CS-701.dgn
9/15/2022 11:27:48 AM pvoelker
LAST PLOTTED BY:

NOTE :

1. FOR DETAILS ON FLOATING SECTOR GATES, SEE THE PLAN SET OF THE VERRAZZANO NARROWS SSB INCLUDED IN SUB-APPENDIX B2-G.

PRELIMINARY
NOT FOR CONSTRUCTION

US Army Corps of Engineers®

MARK	DESCRIPTION	DATE	APPR.
B	DRAFT for Public Review - NY/NJ/HAT Study TSP Plan Set	09.23.22	MK
A	DRAFT for DOC-NY/NJ/HAT Study - TSP Plan Set	08.26.22	MK

DESIGNED BY: IK
DWN BY: AA
CKD BY: MK
SUBMITTED BY: SA
PLOT SCALE: AS SHOWN
PLOT DATE: 9/15/2022
SIZE: ANSI D
FILE NAME: 220032-CS-702.dgn
DATE: 09.08.22
SOLICITATION NO.:
CONTRACT NO.: 220032-01
FILE NUMBER:

U.S. ARMY CORPS OF ENGINEERS
U.S. ARMY ENGINEER DISTRICT
NEW YORK
http://www.nan.usace.army.mil
MOFFATT & NICHOL
529 FIFTH AVE., 14TH FLOOR
NEW YORK, NY 10017
212-768-7454

NEW YORK - NEW JERSEY HARBOR AND TRIBUTARIES COASTAL STORM RISK TENTATIVELY SELECTED PLAN

ARTHUR KILL SSB RENDERING

SHEET ID
CS-702
SHEET 77 OF 88

PATH: \\mne.net\Projects\BA\220032-01\20 CADD_Active_SheetSet\220032-CS-702.dgn
FILE: 220032-CS-702.dgn
9/15/2022 11:27:49 AM
LAST PLOTTED BY: pvoelker

KILL VAN KULL STORM SURGE BARRIER

(LOOKING NORTH/EAST, GATES IN CLOSED POSITION)

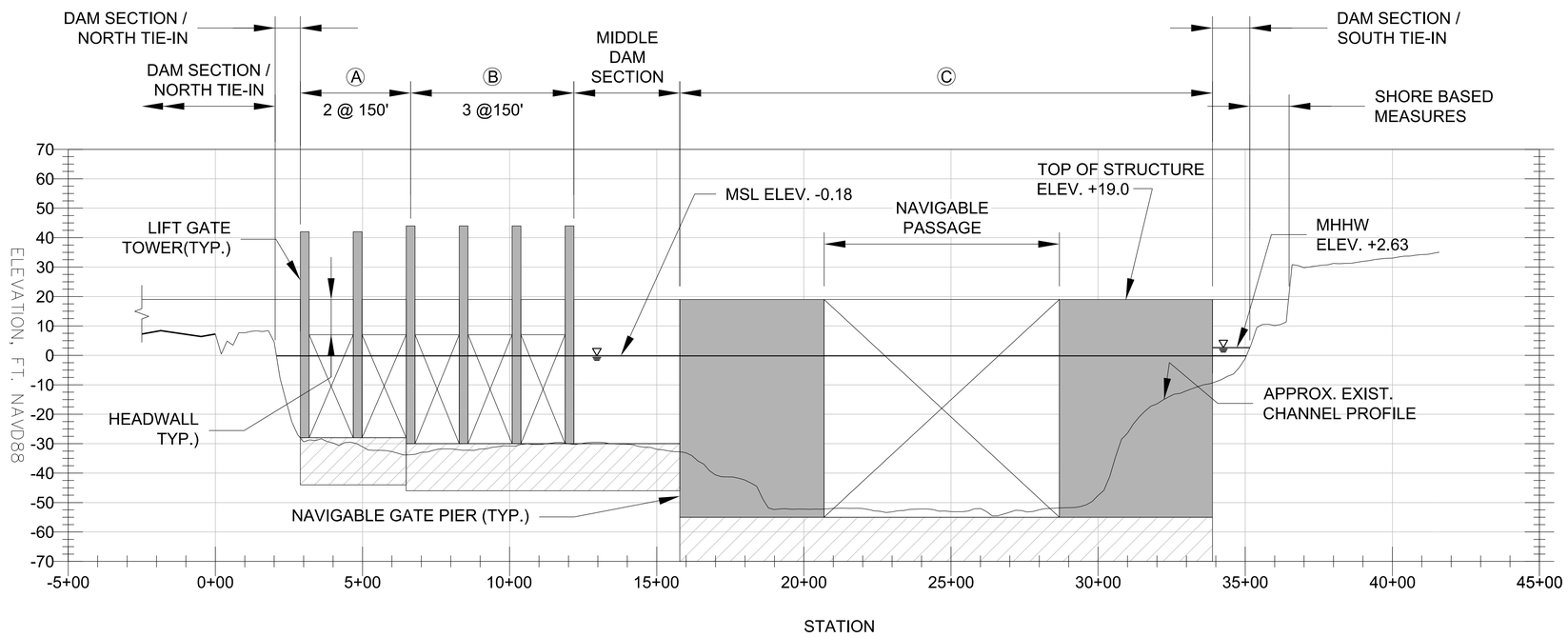

LEGEND:

Ⓐ GATE STRUCTURE SERIES (PER STORM SURGE BARRIER SUB APPENDIX, TABLES SECTION 6) - SEE NOTE 2.

☒ GATE IN CLOSED POSITION

▨ GATE SILL AND FOUNDATION (TBD)

NOTES:

1. THIS ELEVATION VIEW SHOWS A CONCEPTUAL GEOMETRIC DESIGN. THIS PRELIMINARY DEPICTION OF THE GEOMETRY OF THE NAVIGABLE PASSAGES, AUXILIARY FLOW GATES AND STORM SURGE BARRIER CONFIGURATION SHALL NOT BE CONSTRUED AS RECOMMENDATIONS OR REQUIREMENTS FOR ACTUAL DESIGN FOR IMPLEMENTATION. SIGNIFICANT ADDITIONAL STUDY IS REQUIRED TO SUBSTANTIATE THE CONCEPTUAL DESIGN OF THIS STORM SURGE BARRIER.
2. GATE SERIES ARE LABELED AS N@X FT, WHERE N IS NUMBER OF GATES AND X IS CLEAR DISTANCES BETWEEN PIERS (UNLESS OTHERWISE NOTED).
3. EXISTING FLOW AREA WITHOUT STORM SURGE BARRIER EQUALS 120,500 SF. WITH THE STRUCTURE IN PLACE THE FLOW AREA EQUALS 65,600 SF. (54% OF EXISTING).

PRELIMINARY
NOT FOR CONSTRUCTION

US Army Corps of Engineers®

MARK	DESCRIPTION	DATE	APPR.
B	DRAFT for Public Review - NYNJHAT Study TSP Plan Set	09.23.22	MK
A	DRAFT for DQC-NYNJHAT Study - TSP Plan Set	08.26.22	MK

U.S. ARMY CORPS OF ENGINEERS
U.S. ARMY ENGINEER DISTRICT
NEW YORK
http://www.nan.usace.army.mil
MOFFATT & NICHOL
529 FIFTH AVE., 14TH FLOOR
NEW YORK, NY 10017
212-768-7454

DESIGNED BY: IK | DATE: 08/08/22
DWN BY: AA | CKD BY: MK | SOLICITATION NO.:
SUBMITTED BY: SA | CONTRACT NO.: 22003241
PLOT SCALE: AS SHOWN | PLOT DATE: 9/15/2022 | FILE NUMBER:
SIZE: ANSI D | FILE NAME: 220032-CS-703.dgn

NEW YORK - NEW JERSEY HARBOR AND TRIBUTARIES COASTAL STORM RISK TENTATIVELY SELECTED PLAN

KILL VAN KULL SSB ELEVATION

SHEET ID
CS-703
SHEET 78 OF 88

PATH: \\mne.net\Projects\BA\220032-01\20 CADD_Active_SheetSet\220032-CS-703.dgn
FILE: 220032-CS-703.dgn
9/15/2022 11:28:03 AM
LAST PLOTTED BY: pvoelker

NOTE :

1. FOR DETAILS ON FLOATING SECTOR GATES, SEE THE PLAN SET OF THE VERRAZZANO NARROWS SSB INCLUDED IN SUB-APPENDIX B2-G.

PRELIMINARY
NOT FOR CONSTRUCTION

US Army Corps of Engineers®

MARK	DESCRIPTION	DATE	APPR.
B	DRAFT for Public Review - NYNJHAT Study TSP Plan Set	09.23.22	MK
A	DRAFT for DQC-NYNJHAT Study - TSP Plan Set	08.26.22	MK

U.S. ARMY CORPS OF ENGINEERS
U.S. ARMY ENGINEER DISTRICT
NEW YORK
http://www.nan.usace.army.mil

MOFFATT & NICHOL
529 FIFTH AVE., 14TH FLOOR
NEW YORK, NY 10017
212-768-7454

DESIGNED BY: IK
DWN BY: AA
CKD BY: MK
SUBMITTED BY: SA
PLOT SCALE: AS SHOWN
PLOT DATE: 09/15/2022
DATE: 09.09.22
SOLICITATION NO.:
CONTRACT NO.: 220032-01
FILE NUMBER:
SIZE: ANSI D
FILE NAME: 220032-CS-704.dgn

NEW YORK - NEW JERSEY HARBOR AND TRIBUTARIES COASTAL STORM RISK TENTATIVELY SELECTED PLAN

KILL VAN KULL RENDERING

SHEET ID
CS-704

SHEET 79 OF 88

PATH: \\mne.net\Projects\BA\220032-01\20 CADD_Active_SheetSet\220032-CS-704.dgn
FILE: 220032-CS-704.dgn
9/15/2022 11:28:04 AM pvoelker
LAST PLOTTED BY:

NEWTOWN CREEK STORM SURGE BARRIER

(LOOKING EAST , GATES IN THE CLOSED POSITION)

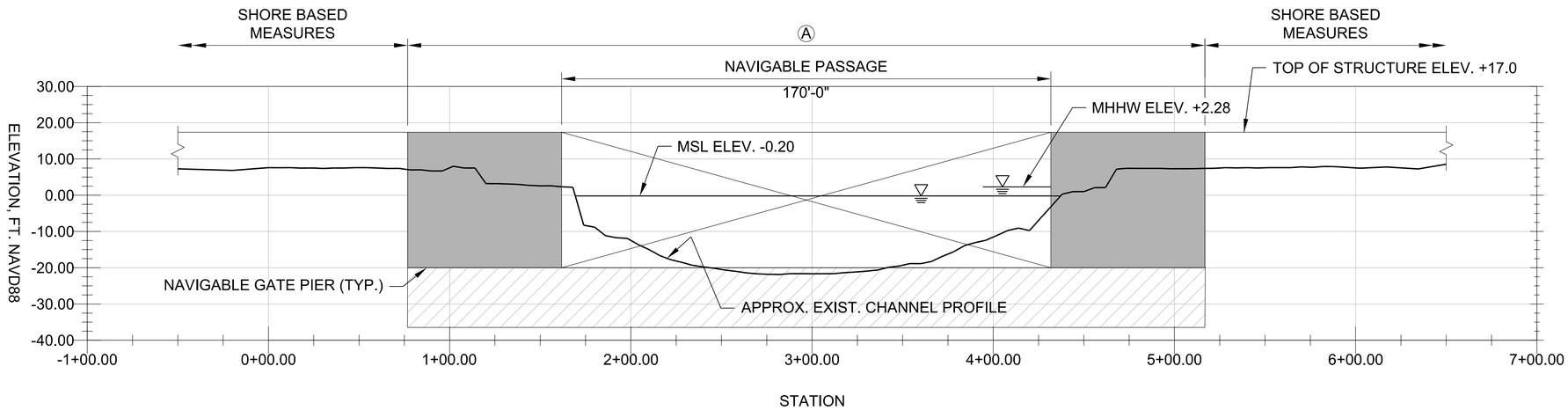

LEGEND:

Ⓐ GATE STRUCTURE SERIES (PER STORM SURGE BARRIER SUB APPENDIX, TABLES SECTION 6) SEE NOTE 2.

☒ GATE IN CLOSED POSITION

GATE SILL AND FOUNDATION

NOTES:

1. THIS ELEVATION VIEW SHOWS A CONCEPTUAL GEOMETRIC DESIGN. THIS PRELIMINARY DEPICTION OF THE GEOMETRY OF THE NAVIGABLE PASSAGES, AUXILIARY FLOW GATES AND STORM SURGE BARRIER CONFIGURATION SHALL NOT BE CONSTRUED AS RECOMMENDATIONS OR REQUIREMENTS FOR ACTUAL DESIGN FOR IMPLEMENTATION. SIGNIFICANT ADDITIONAL STUDY IS REQUIRED TO SUBSTANTIATE THE CONCEPTUAL DESIGN OF THIS STORM SURGE BARRIER.

2. GATE SERIES ARE LABELED AS N@X FT, WHERE N IS NUMBER OF GATES AND X IS CLEAR DISTANCES BETWEEN PIERS (UNLESS OTHERWISE NOTED).

3. EXISTING FLOW AREA WITHOUT STORM SURGE BARRIER EQUALS 4,300 SF. WITH THE STRUCTURE IN PLACE THE FLOW AREA EQUALS 3,400 SF (79% OF EXISTING).

PRELIMINARY
NOT FOR CONSTRUCTION

US Army Corps of Engineers®

MARK	DESCRIPTION	DATE	APPR.
B	DRAFT for Public Review - NYNJHAT Study TSP Plan Set	09.23.22	MK
A	DRAFT for DQC-NYNJHAT Study - TSP Plan Set	08.26.22	MK

U.S. ARMY CORPS OF ENGINEERS
U.S. ARMY ENGINEER DISTRICT
NEW YORK
http://www.nan.usace.army.mil
MOFFATT & NICHOL
529 FIFTH AVE., 14TH FLOOR
NEW YORK, NY 10017
212-768-7454

DESIGNED BY: IK | DATE: 09/08/22
DWN BY: AA | CKD BY: MK | SOLICITATION NO.:
SUBMITTED BY: SA | CONTRACT NO.: 220032-01
PLOT SCALE: AS SHOWN | PLOT DATE: 9/15/2022 | FILE NUMBER:
SIZE: ANSI D | FILE NAME: 220032-CS-705.dgn

NEW YORK - NEW JERSEY HARBOR AND TRIBUTARIES COASTAL STORM RISK TENTATIVELY SELECTED PLAN

NEWTOWN CREEK
SSB ELEVATION

SHEET ID
CS-705
SHEET 80 OF 88

PATH: \\mne.net\Projects\BA\220032-01\20 CADD_Active_SheetSet\220032-CS-705.dgn
FILE: 220032-CS-705.dgn
9/15/2022 11:28:23 AM pvoelker
LAST PLOTTED BY:

GOWANUS CANAL STORM SURGE BARRIER

(LOOKING NORTH, GATES IN THE CLOSED POSITION)

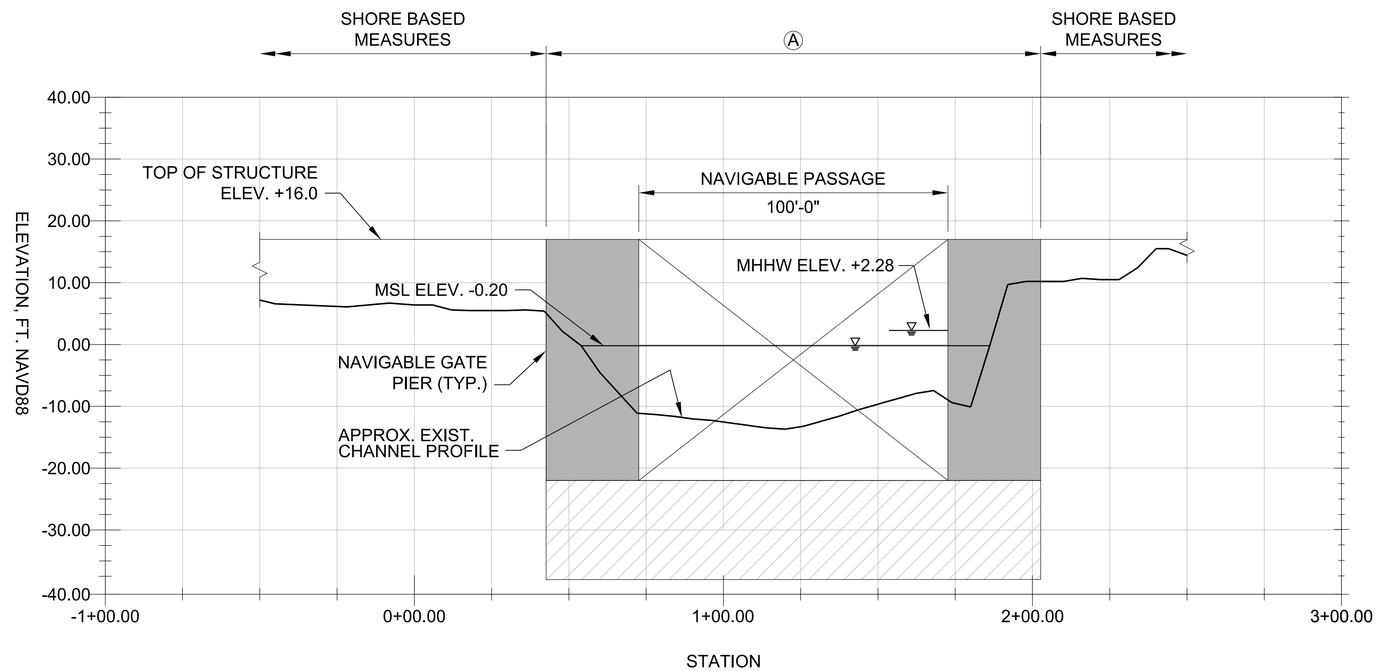

LEGEND:

Ⓐ GATE STRUCTURE SERIES (PER STORM SURGE BARRIER SUB APPENDIX, TABLES SECTION 6) SEE NOTE 2.

☒ GATE IN CLOSED POSITION

▨ GATE SILL AND FOUNDATION

NOTES:

1. THIS ELEVATION VIEW SHOWS A CONCEPTUAL GEOMETRIC DESIGN. THIS PRELIMINARY DEPICTION OF THE GEOMETRY OF THE NAVIGABLE PASSAGES, AUXILIARY FLOW GATES AND BARRIER CONFIGURATION SHALL NOT BE CONSTRUED AS RECOMMENDATIONS OR REQUIREMENTS FOR ACTUAL DESIGN FOR IMPLEMENTATION. SIGNIFICANT ADDITIONAL STUDY IS REQUIRED TO SUBSTANTIATE THE CONCEPTUAL DESIGN OF THIS BARRIER.

2. GATE SERIES ARE LABELED AS N@X FT, WHERE N IS NUMBER OF GATES AND X IS CLEAR DISTANCES BETWEEN PIERS (UNLESS OTHERWISE NOTED).

3. EXISTING FLOW AREA WITHOUT BARRIER EQUALS 1,300 SF. WITH THE STRUCTURE IN PLACE THE FLOW AREA EQUALS 2,200 SF (169% OF EXISTING).

PRELIMINARY
NOT FOR CONSTRUCTION

US Army Corps of Engineers®

MARK	DESCRIPTION	DATE	APPR.
B	DRAFT for Public Review - NYNJHAT Study TSP Plan Set	09.23.22	MK
A	DRAFT for DQC-NYNJHAT Study - TSP Plan Set	08.26.22	MK

U.S. ARMY CORPS OF ENGINEERS
U.S. ARMY ENGINEER DISTRICT
NEW YORK
http://www.nan.usace.army.mil

MOFFATT & NICHOL
529 FIFTH AVE., 14TH FLOOR
NEW YORK, NY 10017
212-768-7454

DESIGNED BY: IK | DATE: 08/08/22
DWN BY: AA | CKD BY: MK | SOLICITATION NO.:
SUBMITTED BY: SA | CONTRACT NO.: 22003241
PLOT SCALE: AS SHOWN | PLOT DATE: 9/15/2022 | FILE NUMBER:
SIZE: ANSI D | FILE NAME: 220032-CS-706.dgn

NEW YORK - NEW JERSEY HARBOR AND TRIBUTARIES COASTAL STORM RISK TENTATIVELY SELECTED PLAN

GOWANUS CANAL
SSB ELEVATION

SHEET ID
CS-706

SHEET 81 OF 88

PATH: \\mne.net\Projects\BA\220032-01\20 CADD_Active_SheetSet\220032-CS-706.dgn
FILE: 220032-CS-706.dgn
9/15/2022 11:28:23 AM pvoelker
LAST PLOTTED BY:

FLUSHING CREEK STORM SURGE BARRIER
(LOOKING EAST, GATES IN THE CLOSED POSITION)

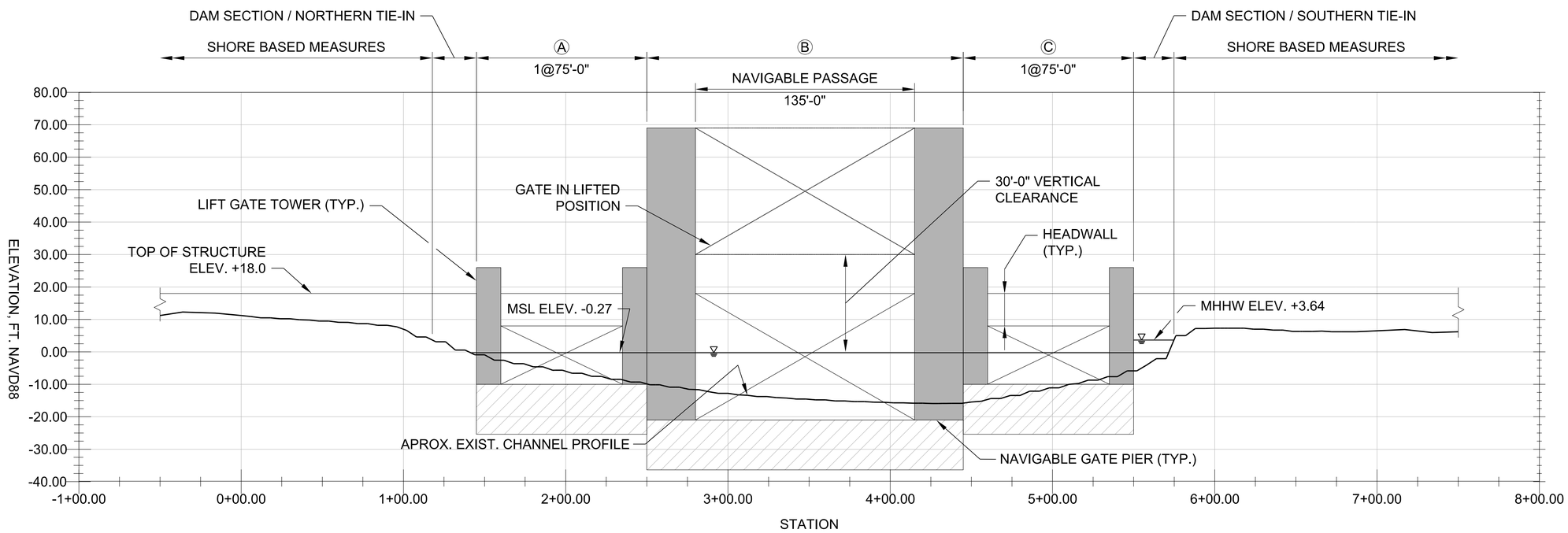

LEGEND:

Ⓐ GATE STRUCTURE SERIES (PER STORM SURGE BARRIER SUB APPENDIX, TABLES SECTION 6) SEE NOTE 2.

☒ GATE IN CLOSED POSITION

▨ GATE SILL AND FOUNDATION

NOTES:

1. THIS ELEVATION VIEW SHOWS A CONCEPTUAL GEOMETRIC DESIGN. THIS PRELIMINARY DEPICTION OF THE GEOMETRY OF THE NAVIGABLE PASSAGES, AUXILIARY FLOW GATES AND BARRIER CONFIGURATION SHALL NOT BE CONSTRUED AS RECOMMENDATIONS OR REQUIREMENTS FOR ACTUAL DESIGN FOR IMPLEMENTATION. SIGNIFICANT ADDITIONAL STUDY IS REQUIRED TO SUBSTANTIATE THE CONCEPTUAL DESIGN OF THIS BARRIER.
2. GATE SERIES ARE LABELED AS N@X FT, WHERE N IS NUMBER OF GATES AND X IS CLEAR DISTANCES BETWEEN PIERS (UNLESS OTHERWISE NOTED).
3. EXISTING FLOW AREA WITHOUT BARRIER EQUALS 4,500 SF. WITH THE STRUCTURE IN PLACE THE FLOW AREA EQUALS 4,300 SF (96% OF EXISTING).

PRELIMINARY
NOT FOR CONSTRUCTION

PATH: \\mne.net\Projects\BA\220032-01\20 CADD_Active_SheetSet\220032-CS-707.dgn
FILE: 220032-CS-707.dgn
9/15/2022 11:28:23 AM
LAST PLOTTED BY: pvoelker

US Army Corps of Engineers®

MARK	DESCRIPTION	DATE	APPR.
B	DRAFT for Public Review - NYNJHAT Study TSP Plan Set	09.23.22	MK
A	DRAFT for DQC-NYNJHAT Study - TSP Plan Set	08.26.22	MK

DESIGNED BY: IK
DATE: 09.09.22
DWN BY: AA
CKD BY: MK
SOLICITATION NO.:
SUBMITTED BY: SA
CONTRACT NO.: 220032-01
PLOT SCALE: AS SHOWN
PLOT DATE: 9/15/2022
FILE NUMBER:
SIZE: ANSI D
FILE NAME: 220032-CS-707.dgn

U.S. ARMY CORPS OF ENGINEERS
U.S. ARMY ENGINEER DISTRICT
NEW YORK
http://www.nan.usace.army.mil

MOFFATT & NICHOL
529 FIFTH AVE., 14TH FLOOR
NEW YORK, NY 10017
212-768-7454

NEW YORK - NEW JERSEY HARBOR AND TRIBUTARIES COASTAL STORM RISK TENTATIVELY SELECTED PLAN

FLUSHING CREEK
SSB ELEVATION

SHEET ID
CS-707

SHEET 82 OF 88

SHEEPSHEAD BAY STORM SURGE BARRIER

(LOOKING EAST , GATES IN THE CLOSED POSITION)

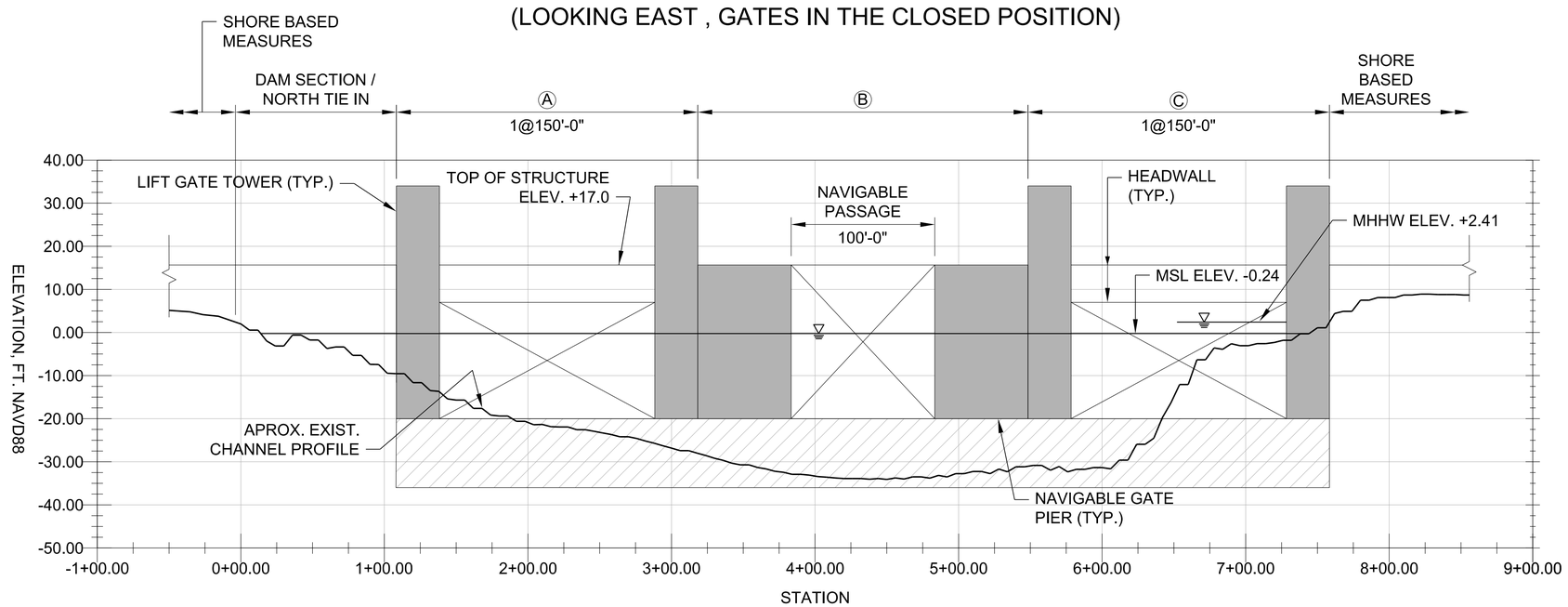

LEGEND:

Ⓐ GATE STRUCTURE SERIES (PER STORM SURGE BARRIER SUB APPENDIX, TABLES SECTION 6) SEE NOTE 2.

☒ GATE IN CLOSED POSITION

☐ GATE SILL AND FOUNDATION

NOTES:

1. THIS ELEVATION VIEW SHOWS A CONCEPTUAL GEOMETRIC DESIGN. THIS PRELIMINARY DEPICTION OF THE GEOMETRY OF THE NAVIGABLE PASSAGES, AUXILIARY FLOW GATES AND BARRIER CONFIGURATION SHALL NOT BE CONSTRUED AS RECOMMENDATIONS OR REQUIREMENTS FOR ACTUAL DESIGN FOR IMPLEMENTATION. SIGNIFICANT ADDITIONAL STUDY IS REQUIRED TO SUBSTANTIATE THE CONCEPTUAL DESIGN OF THIS BARRIER.

2. GATE SERIES ARE LABELED AS N@X FT, WHERE N IS NUMBER OF GATES AND X IS CLEAR DISTANCES BETWEEN PIERS (UNLESS OTHERWISE NOTED).

3. EXISTING FLOW AREA WITHOUT BARRIER EQUALS 15,300 SF. WITH THE STRUCTURE IN PLACE THE FLOW AREA EQUALS 7,900 SF (52% OF EXISTING).

PRELIMINARY
NOT FOR CONSTRUCTION

US Army Corps of Engineers®

MARK	DESCRIPTION	DATE	APPR.
B	DRAFT for Public Review - NYNJHAT Study TSP Plan Set	09.23.22	MK
A	DRAFT for DQC-NYNJHAT Study - TSP Plan Set	08.26.22	MK

U.S. ARMY CORPS OF ENGINEERS
U.S. ARMY ENGINEER DISTRICT
NEW YORK
http://www.nan.usace.army.mil
MOFFATT & NICHOL
529 FIFTH AVE., 14TH FLOOR
NEW YORK, NY 10017
212-768-7454

DESIGNED BY: IK | DATE: 08/08/22
DWN BY: AA | CKD BY: MK | SOLICITATION NO.:
SUBMITTED BY: SA | CONTRACT NO.: 22003241
PLOT SCALE: AS SHOWN | PLOT DATE: 9/15/2022 | FILE NUMBER:
SIZE: ANSI D | FILE NAME: 220032-CS-708.dgn

NEW YORK - NEW JERSEY HARBOR AND TRIBUTARIES COASTAL STORM RISK TENTATIVELY SELECTED PLAN

SHEEPSHEAD BAY SSB ELEVATION

SHEET ID
CS-708
SHEET 83 OF 88

PATH: \\mne.net\Projects\BA\220032-01\20 CADD_Active_SheetSet\220032-CS-708.dgn
FILE: 220032-CS-708.dgn
9/15/2022 11:28:26 AM pvoelker
LAST PLOTTED BY:

GERRITSEN CREEK STORM SURGE BARRIER

(LOOKING SOUTH , GATES IN THE CLOSED POSITION)

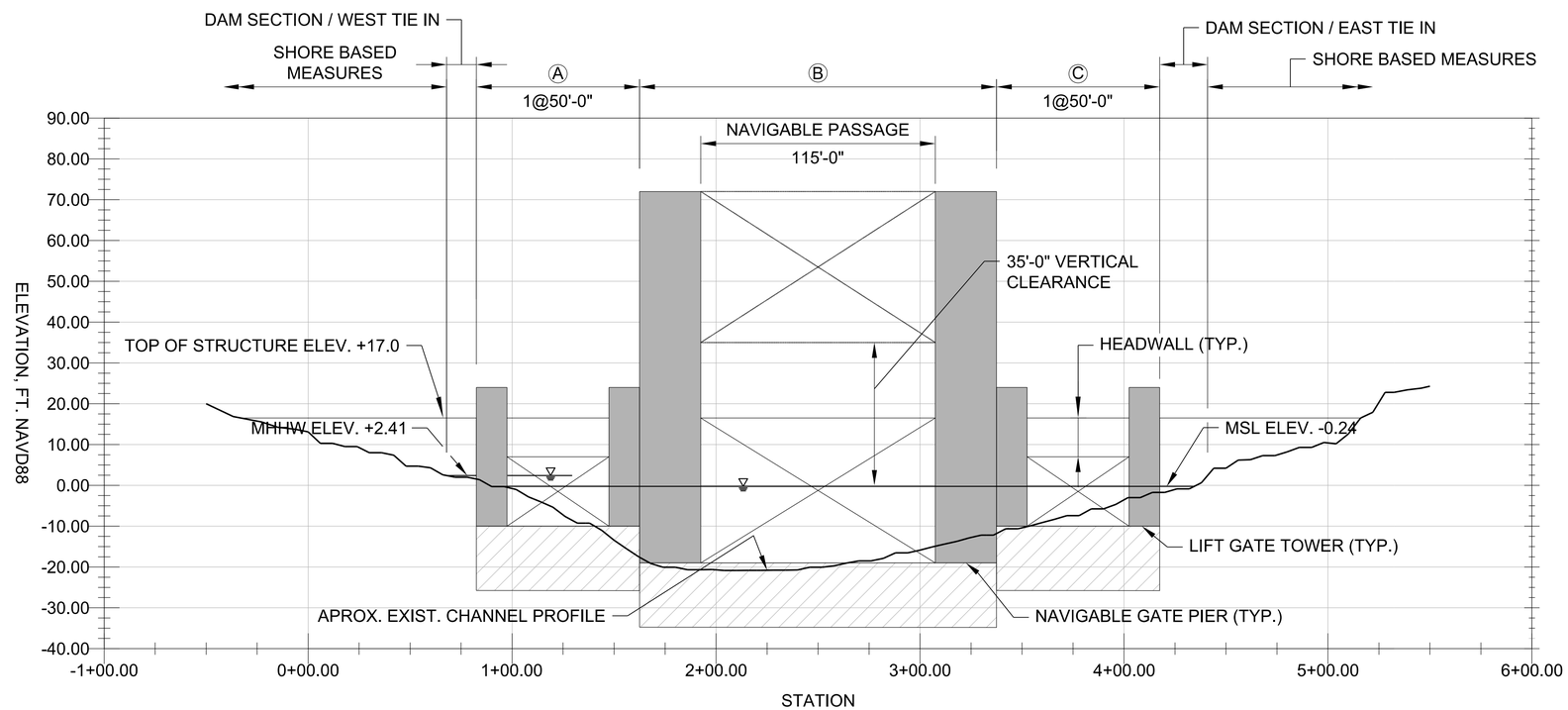

LEGEND:

Ⓐ GATE STRUCTURE SERIES (PER STORM SURGE BARRIER SUB APPENDIX, TABLES SECTION 6) SEE NOTE 2.

☒ GATE IN CLOSED POSITION

☐ GATE SILL AND FOUNDATION

NOTES:

1. THIS ELEVATION VIEW SHOWS A CONCEPTUAL GEOMETRIC DESIGN. THIS PRELIMINARY DEPICTION OF THE GEOMETRY OF THE NAVIGABLE PASSAGES, AUXILIARY FLOW GATES AND BARRIER CONFIGURATION SHALL NOT BE CONSTRUED AS RECOMMENDATIONS OR REQUIREMENTS FOR ACTUAL DESIGN FOR IMPLEMENTATION. SIGNIFICANT ADDITIONAL STUDY IS REQUIRED TO SUBSTANTIATE THE CONCEPTUAL DESIGN OF THIS BARRIER.

2. GATE SERIES ARE LABELED AS N@X FT, WHERE N IS NUMBER OF GATES AND X IS CLEAR DISTANCES BETWEEN PIERS (UNLESS OTHERWISE NOTED).

3. EXISTING FLOW AREA WITHOUT BARRIER EQUALS 4,200 SF. WITH THE STRUCTURE IN PLACE THE FLOW AREA EQUALS 3,100 SF (74% OF EXISTING).

PRELIMINARY
NOT FOR CONSTRUCTION

US Army Corps of Engineers®

MARK	DESCRIPTION	DATE	APPR.
B	DRAFT for Public Review - NYNJHAT Study TSP Plan Set	09.23.22	MK
A	DRAFT for DQC-NYNJHAT Study - TSP Plan Set	08.26.22	MK

DESIGNED BY: IK
DWN BY: AA
CKD BY: MK
SUBMITTED BY: SA
PLOT SCALE: AS SHOWN
PLOT DATE: 9/15/2022
SIZE: ANSI D
FILE NAME: 220032-CS-709.dgn
DATE: 09.09.22
SOLICITATION NO.:
CONTRACT NO.: 220032-01
FILE NUMBER:

U.S. ARMY CORPS OF ENGINEERS
U.S. ARMY ENGINEER DISTRICT
NEW YORK
http://www.nan.usace.army.mil
MOFFATT & NICHOL
529 FIFTH AVE., 14TH FLOOR
NEW YORK, NY 10017
212-768-7454

NEW YORK - NEW JERSEY HARBOR AND TRIBUTARIES COASTAL STORM RISK TENTATIVELY SELECTED PLAN

GERRITSEN CREEK SSB ELEVATION

SHEET ID
CS-709
SHEET 84 OF 88

PATH: \\mne.net\Projects\BA\220032-01\20 CADD_Active_SheetSet\220032-CS-709.dgn
FILE: 220032-CS-709.dgn
9/15/2022 11:28:26 AM pvoelker
LAST PLOTTED BY:

HACKENSACK RIVER RRF - NAVIGABLE GATE

(LOOKING EAST, GATES IN CLOSED POSITION)

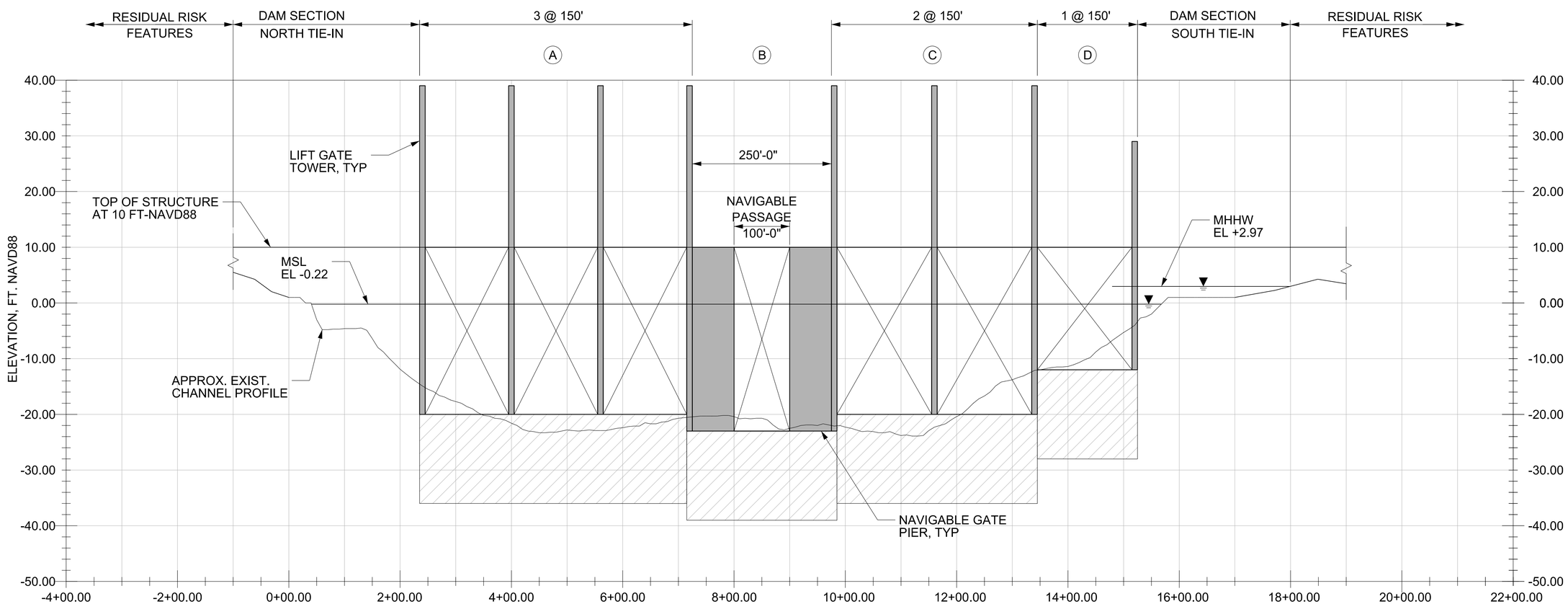

LEGEND:

(A) GATE STRUCTURE SERIES (PER STORM SURGE BARRIER SUB APPENDIX, TABLES SECTION 7) SEE NOTE 2.

☒ GATE IN CLOSED POSITION

☐ GATE SILL AND FOUNDATION

NOTES:

1. THIS ELEVATION VIEW SHOWS A CONCEPTUAL GEOMETRIC DESIGN. THIS PRELIMINARY DEPICTION OF THE GEOMETRY OF THE NAVIGABLE PASSAGES. AUXILIARY FLOW GATES AND BARRIER CONFIGURATION SHALL NOT BE CONSTRUED AS RECOMMENDATIONS OR REQUIREMENTS FOR ACTUAL DESIGN FOR IMPLEMENTATION. SIGNIFICANT ADDITIONAL STUDY IS REQUIRED TO SUBSTANTIATE THE CONCEPTUAL DESIGN OF THIS BARRIER.
2. GATE SERIES ARE LABELED AS N@X FT. WHERE N IS NUMBER OF GATES AND X IS CLEAR DISTANCES BETWEEN PIERS (UNLESS OTHERWISE NOTED).
3. EXISTING FLOW AREA WITHOUT BARRIER EQUALS 26,400 SF. WITH THE STRUCTURE IN PLACE THE FLOW AREA EQUALS 19,000 SF. (72% OF EXISTING).

PRELIMINARY
NOT FOR CONSTRUCTION

US Army Corps of Engineers®

MARK	DESCRIPTION	DATE	APPR.
B	DRAFT for Public Review - NY/NJHAT Study TSP Plan Set	09.23.22	MK
A	DRAFT for DOC-NY/NJHAT Study - TSP Plan Set	08.26.22	MK

DESIGNED BY: IK | DWN BY: AA | CKD BY: MK | SUBMITTED BY: SA | PLOT SCALE: AS NOTED | PLOT DATE: 9/15/2022 | SIZE: ANSI D | FILE NAME: 220032-CS-801.dgn

DATE: 09.09.22 | SOLICITATION NO.: | CONTRACT NO.: 220032-01 | FILE NUMBER:

U.S. ARMY CORPS OF ENGINEERS
U.S. ARMY ENGINEER DISTRICT
NEW YORK
http://www.nan.usace.army.mil

MOFFATT & NICHOL
529 FIFTH AVE., 14TH FLOOR
NEW YORK, NY 10017
212-768-7454

NEW YORK - NEW JERSEY HARBOR AND TRIBUTARIES COASTAL STORM RISK TENTATIVELY SELECTED PLAN

HACKENSACK RIVER RRF
NAVIGABLE GATE ELEVATION

SHEET ID
CS-801

SHEET 85 OF 88

PATH: \\mne.net\Projects\BA\220032-01\20 CADD_Active_SheetSet\220032-CS-801.dgn
FILE: 220032-CS-801.dgn
9/15/2022 11:29:34 AM pvoelker
LAST PLOTTED BY:

HEAD OF BAY GATE RRF - NAVIGABLE GATE

(LOOKING NORTH, GATES IN CLOSED POSITION)

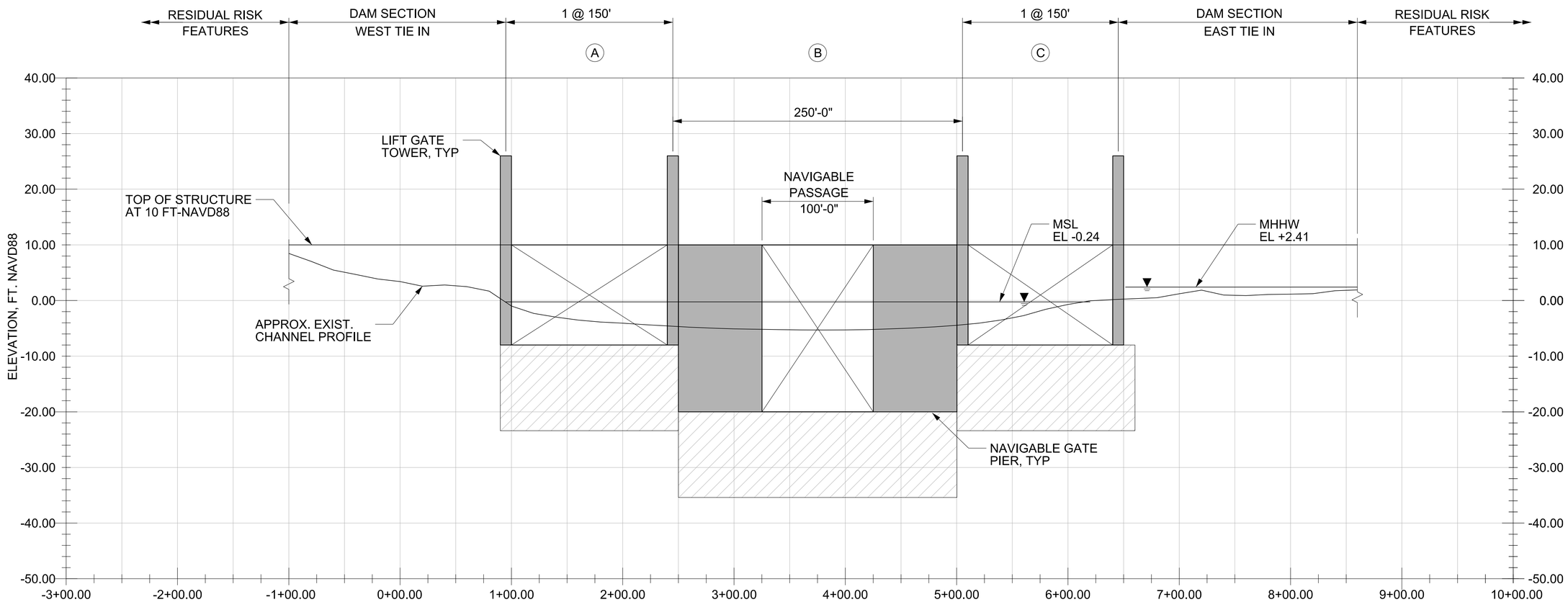

LEGEND:

(A) GATE STRUCTURE SERIES (PER STORM SURGE BARRIER SUB APPENDIX, TABLES SECTION 7) SEE NOTE 2.

☒ GATE IN CLOSED POSITION

GATE SILL AND FOUNDATION

NOTES:

1. THIS ELEVATION VIEW SHOWS A CONCEPTUAL GEOMETRIC DESIGN. THIS PRELIMINARY DEPICTION OF THE GEOMETRY OF THE NAVIGABLE PASSAGES. AUXILIARY FLOW GATES AND BARRIER CONFIGURATION SHALL NOT BE CONSTRUED AS RECOMMENDATIONS OR REQUIREMENTS FOR ACTUAL DESIGN FOR IMPLEMENTATION. SIGNIFICANT ADDITIONAL STUDY IS REQUIRED TO SUBSTANTIATE THE CONCEPTUAL DESIGN OF THIS BARRIER.
2. GATE SERIES ARE LABELED AS N@X FT. WHERE N IS NUMBER OF GATES AND X IS CLEAR DISTANCES BETWEEN PIERS (UNLESS OTHERWISE NOTED).
3. EXISTING FLOW AREA WITHOUT BARRIER EQUALS 2,000 SF. WITH THE STRUCTURE IN PLACE THE FLOW AREA EQUALS 4,300 SF. (215% OF EXISTING).

PRELIMINARY
NOT FOR CONSTRUCTION

US Army Corps of Engineers®

MARK	DESCRIPTION	DATE	APPR.
B	DRAFT for Public Review - NY/NJ/HAT Study TSP Plan Set	09.23.22	MK
A	DRAFT for DQC-NY/NJ/HAT Study - TSP Plan Set	08.26.22	MK

DESIGNED BY: IK | DATE: 09.09.22
DWN BY: AA | CKD BY: MK | SOLICITATION NO.:
SUBMITTED BY: SA | CONTRACT NO.: 220032-01
PLOT SCALE: AS SHOWN | PLOT DATE: 9/15/2022 | FILE NUMBER:
SIZE: ANSI D | FILE NAME: 220032-CS-802.dgn

U.S. ARMY CORPS OF ENGINEERS
U.S. ARMY ENGINEER DISTRICT
NEW YORK
http://www.nan.usace.army.mil
MOFFATT & NICHOL
529 FIFTH AVE., 14TH FLOOR
NEW YORK, NY 10017
212-768-7454

NEW YORK - NEW JERSEY HARBOR AND TRIBUTARIES COASTAL STORM RISK TENTATIVELY SELECTED PLAN

HEAD OF BAY GATE RRF
NAVIGABLE GATE ELEVATION

SHEET ID
CS-802
SHEET 86 OF 88

PATH: \\mne.net\Projects\BA\220032-01\20 CADD_Active_SheetSet\220032-CS-802.dgn
FILE: 220032-CS-802.dgn
9/15/2022 2:55:53 PM
LAST PLOTTED BY: pvoelker

OLD HOWARD BEACH EAST GATE RRF - NAVIGABLE GATE

(LOOKING SOUTH, GATES IN CLOSED POSITION)

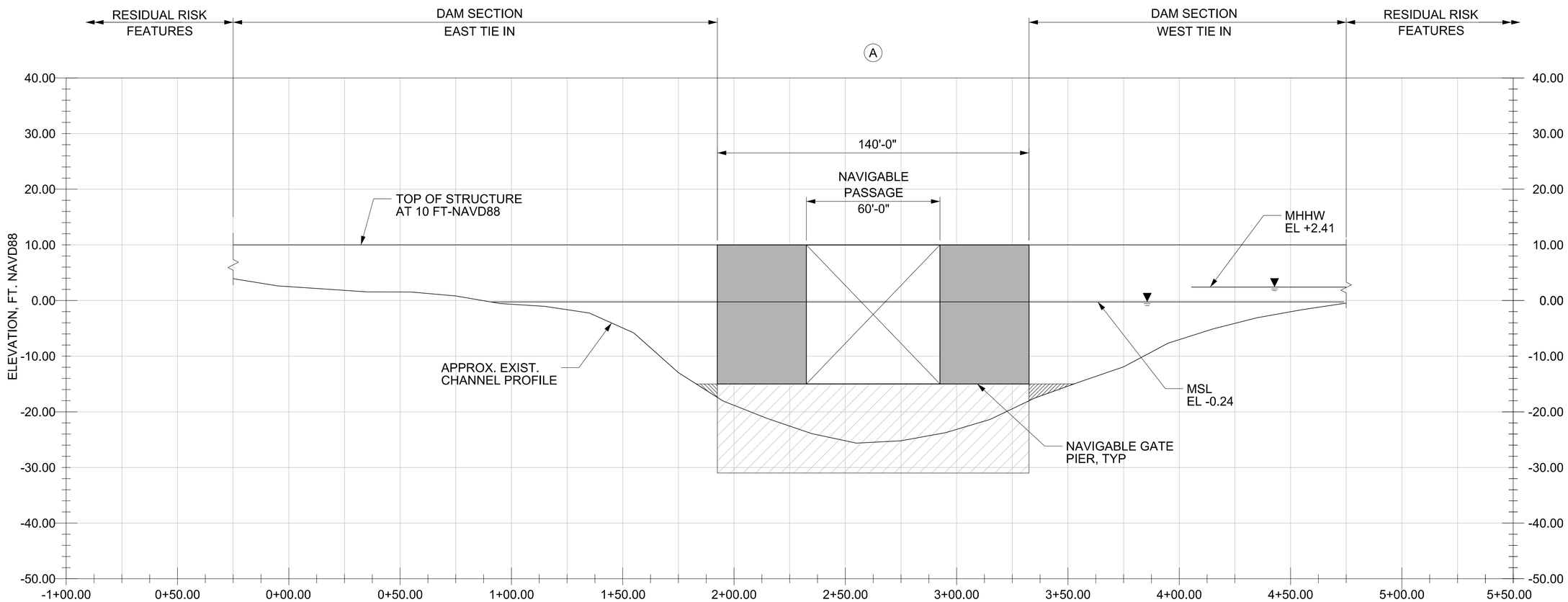

LEGEND:

(A) GATE STRUCTURE SERIES (PER STORM SURGE BARRIER SUB APPENDIX, TABLES SECTION 7) SEE NOTE 2.

☒ GATE IN CLOSED POSITION

GATE SILL AND FOUNDATION

NOTES:

1. THIS ELEVATION VIEW SHOWS A CONCEPTUAL GEOMETRIC DESIGN. THIS PRELIMINARY DEPICTION OF THE GEOMETRY OF THE NAVIGABLE PASSAGES. AUXILIARY FLOW GATES AND BARRIER CONFIGURATION SHALL NOT BE CONSTRUED AS RECOMMENDATIONS OR REQUIREMENTS FOR ACTUAL DESIGN FOR IMPLEMENTATION. SIGNIFICANT ADDITIONAL STUDY IS REQUIRED TO SUBSTANTIATE THE CONCEPTUAL DESIGN OF THIS BARRIER.
2. GATE SERIES ARE LABELED AS N@X FT. WHERE N IS NUMBER OF GATES AND X IS CLEAR DISTANCES BETWEEN PIERS (UNLESS OTHERWISE NOTED).
3. EXISTING FLOW AREA WITHOUT BARRIER EQUALS 4,800 SF. WITH THE STRUCTURE IN PLACE THE FLOW AREA EQUALS 900 SF. (19% OF EXISTING).

PRELIMINARY
NOT FOR CONSTRUCTION

US Army Corps of Engineers®

MARK	DESCRIPTION	DATE	APPR.
B	DRAFT for Public Review - NYNJHAT Study TSP Plan Set	09.23.22	MK
A	DRAFT for DQC-NYNJHAT Study - TSP Plan Set	08.26.22	MK

U.S. ARMY CORPS OF ENGINEERS
U.S. ARMY ENGINEER DISTRICT
NEW YORK
http://www.nan.usace.army.mil

MOFFATT & NICHOL
529 FIFTH AVE., 14TH FLOOR
NEW YORK, NY 10017
212-768-7454

DESIGNED BY: IK | DATE: 09.09.22
DWN BY: AA | CKD BY: MK | SOLICITATION NO.:
SUBMITTED BY: SA | CONTRACT NO.: 220032-01
PLOT SCALE: AS SHOWN | PLOT DATE: 9/15/2022 | FILE NUMBER:
SIZE: ANSI D | FILE NAME: 220032-CS-803.dgn

NEW YORK - NEW JERSEY HARBOR AND TRIBUTARIES COASTAL STORM RISK TENTATIVELY SELECTED PLAN

OLD HOWARD BEACH EAST GATE RRF
NAVIGABLE GATE ELEVATION

SHEET ID
CS-803
SHEET 87 OF 88

PATH: \\mne.net\Projects\BA\220032-01\20 CADD_Active_SheetSet\220032-CS-803.dgn
FILE: 220032-CS-803.dgn 9/15/2022 11:29:35 AM
LAST PLOTTED BY: pvoelker

OLD HOWARD BEACH WEST GATE RRF - NAVIGABLE GATE

(LOOKING SOUTH, GATES IN CLOSED POSITION)

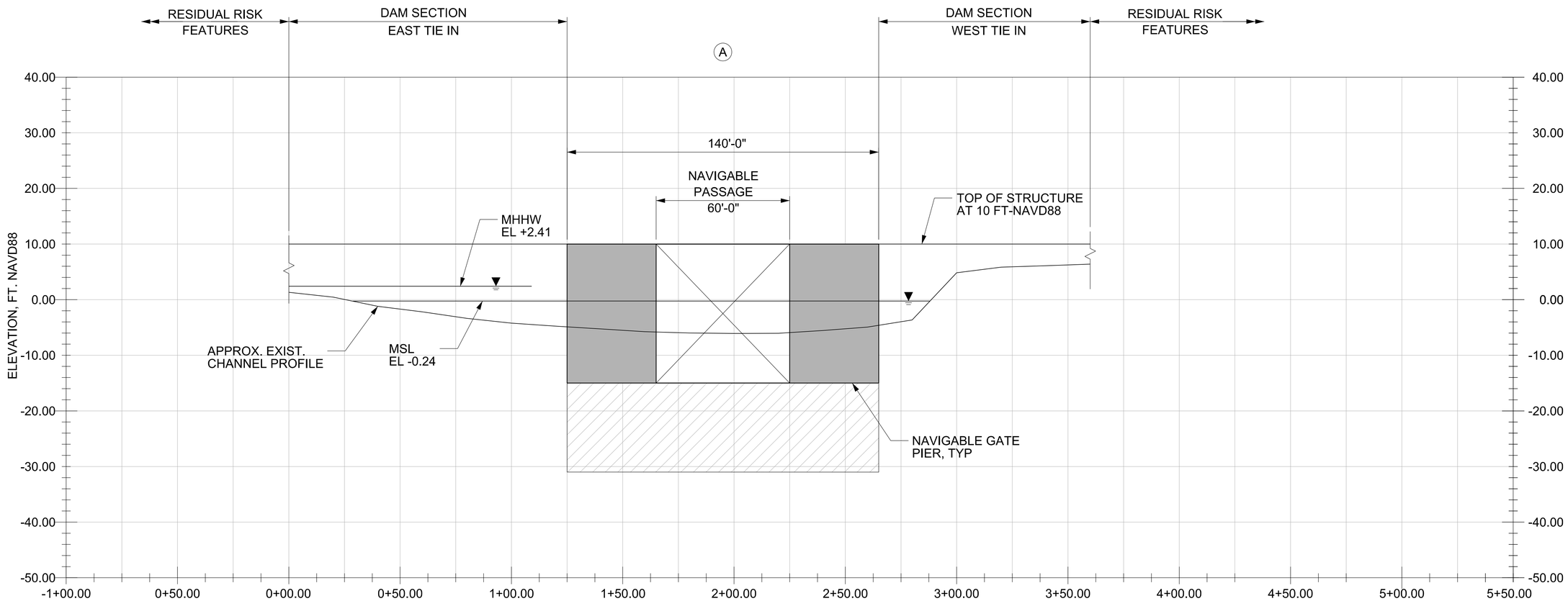

LEGEND:

(A) GATE STRUCTURE SERIES (PER STORM SURGE BARRIER SUB APPENDIX, TABLES SECTION 7) SEE NOTE 2.

☒ GATE IN CLOSED POSITION

▨ GATE SILL AND FOUNDATION

NOTES:

1. THIS ELEVATION VIEW SHOWS A CONCEPTUAL GEOMETRIC DESIGN. THIS PRELIMINARY DEPICTION OF THE GEOMETRY OF THE NAVIGABLE PASSAGES. AUXILIARY FLOW GATES AND BARRIER CONFIGURATION SHALL NOT BE CONSTRUED AS RECOMMENDATIONS OR REQUIREMENTS FOR ACTUAL DESIGN FOR IMPLEMENTATION. SIGNIFICANT ADDITIONAL STUDY IS REQUIRED TO SUBSTANTIATE THE CONCEPTUAL DESIGN OF THIS BARRIER.
2. GATE SERIES ARE LABELED AS N@X FT. WHERE N IS NUMBER OF GATES AND X IS CLEAR DISTANCES BETWEEN PIERS (UNLESS OTHERWISE NOTED).
3. EXISTING FLOW AREA WITHOUT BARRIER EQUALS 1,100 SF. WITH THE STRUCTURE IN PLACE THE FLOW AREA EQUALS 900 SF. (82% OF EXISTING).

PRELIMINARY
NOT FOR CONSTRUCTION

US Army Corps of Engineers®

MARK	DESCRIPTION	DATE	APPR.
B	DRAFT for Public Review - NYNJHAT Study TSP Plan Set	09.23.22	MK
A	DRAFT for DQC-NYNJHAT Study - TSP Plan Set	08.26.22	MK

U.S. ARMY CORPS OF ENGINEERS
U.S. ARMY ENGINEER DISTRICT
NEW YORK
http://www.nan.usace.army.mil
MOFFATT & NICHOL
529 FIFTH AVE., 14TH FLOOR
NEW YORK, NY 10017
212-768-7454

DESIGNED BY: IK | DATE: 09.09.22
DWN BY: AA | CKD BY: MK | SOLICITATION NO.:
SUBMITTED BY: SA | CONTRACT NO.: 220032-01
PLOT SCALE: AS SHOWN | PLOT DATE: 9/15/2022 | FILE NUMBER:
SIZE: ANSI D | FILE NAME: 220032-CS-804.dgn

NEW YORK - NEW JERSEY HARBOR AND TRIBUTARIES COASTAL STORM RISK TENTATIVELY SELECTED PLAN

OLD HOWARD BEACH WEST GATE RRF NAVIGABLE GATE ELEVATION

SHEET ID
CS-804
SHEET 88 OF 88

PATH: \\mne.net\Projects\BA\220032-01\20 CADD_Active_SheetSet\220032-CS-804.dgn
FILE: 220032-CS-804.dgn
9/15/2022 11:29:35 AM pvoelker
LAST PLOTTED BY: