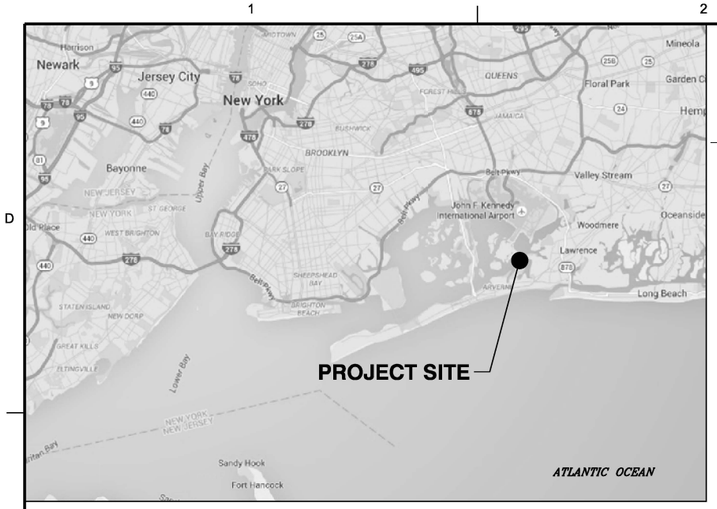

VICINITY MAP

NTS

INTEGRATED HURRICANE SANDY GENERAL RE-EVALUATION REPORT AND ENVIRONMENTAL IMPACT STATEMENT

ATLANTIC COAST OF NEW YORK

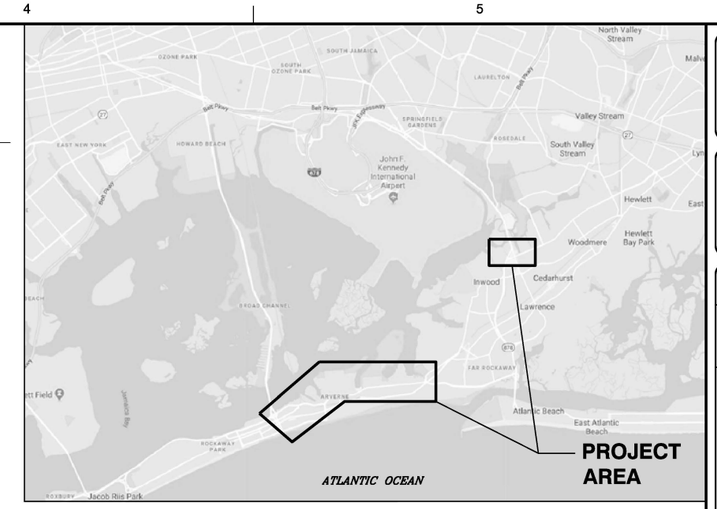

LOCATION PLAN

NTS

JAMAICA BAY

INDEX TO DRAWINGS

INDEX NO.	SHEET NO.	SHEET TITLE
1	G-001	COVER SHEET
2	G-101	SHEET KEY PLAN
3	CS-101	SITE PLAN (1 OF 8)
4	CS-102	SITE PLAN (2 OF 8)
5	CS-103	SITE PLAN (3 OF 8)
6	CS-104	SITE PLAN (4 OF 8)
7	CS-105	SITE PLAN (5 OF 8)
8	CS-106	SITE PLAN (6 OF 8)
9	CS-107	SITE PLAN (7 OF 8)
10	CS-108	SITE PLAN (8 OF 8)
11	CS-501	FLOODWALL AND BULKHEAD TYPICAL SECTIONS
12	CS-502	BERM AND REVETMENT WITH FLOODWALL TYPICAL SECTIONS
13	CS-503	NATURAL AND NATURE BASED FEATURES (NNBF) SECTION
14	CS-504	ROAD RAMP SECTIONS
15	CS-505	SWING GATE PLAN AND ELEVATION
16	CU-101	INTERIOR DRAINAGE PLAN (1 OF 8)
17	CU-102	INTERIOR DRAINAGE PLAN (2 OF 8)
18	CU-103	INTERIOR DRAINAGE PLAN (3 OF 8)
19	CU-104	INTERIOR DRAINAGE PLAN (4 OF 8)
20	CU-105	INTERIOR DRAINAGE PLAN (5 OF 8)
21	CU-106	INTERIOR DRAINAGE PLAN (6 OF 8)
22	CU-107	INTERIOR DRAINAGE PLAN (7 OF 8)
23	CU-108	INTERIOR DRAINAGE PLAN (8 OF 8)
24	CU-501	TYPICAL DRAINAGE OUTFALL DETAILS - SHEET 1
25	CU-502	TYPICAL DRAINAGE OUTFALL DETAILS - SHEET 2
26	CU-503	TYPICAL DRAINAGE OUTFALL DETAILS - SHEET 3

PRELIMINARY
NOT FOR CONSTRUCTION

US Army Corps of Engineers®

MARK	DESCRIPTION	DATE	APPR.
E	FINAL GRR - APPENDIX A2.F	12.05.18	MK
D	DRAFT FINAL GRR - APPENDIX A2.E	11.19.18	MK
C	DRAFT FINAL GRR - APPENDIX A2.E	08.30.18	MK
B	DRAFT FINAL GRR - APPENDIX A2.E	08.20.18	MK
A	DRAFT FINAL GRR - APPENDIX A2.E	07.19.18	MK

U.S. ARMY CORPS OF ENGINEERS
U.S. ARMY ENGINEER DISTRICT
NEW YORK
http://www.nan.usace.army.mil
MOFFATT & NICHOL
529 FIFTH AVE., 14TH FLOOR
NEW YORK, NY 10017
212-768-7454

DESIGNED BY: IK | DATE: 12.05.18
DWN BY: ME | CKD BY: MK | SOLICITATION NO.:
SUBMITTED BY: SA | CONTRACT NO.: 9781-02
PLOT SCALE: 1:1 ISO6001 | PLOT DATE: 11/12/2018 | FILE NUMBER:
SIZE: ANSI D | FILE NAME: W912DS_A1_G-001.dgn

INTEGRATED HURRICANE SANDY GENERAL RE-EVALUATION REPORT AND ENVIRONMENTAL IMPACT STATEMENT

COVER SHEET

SHEET ID
G-001

SHEET 1 OF 26

PATH: Q:\NY\9781-02\500_CADD_Active_HFFRRF Report-App A2\
LAST PLOTTED BY: mestimable 11:33:11 AM 12/3/2018 FILE: W912DS_A1_G-001.dgn

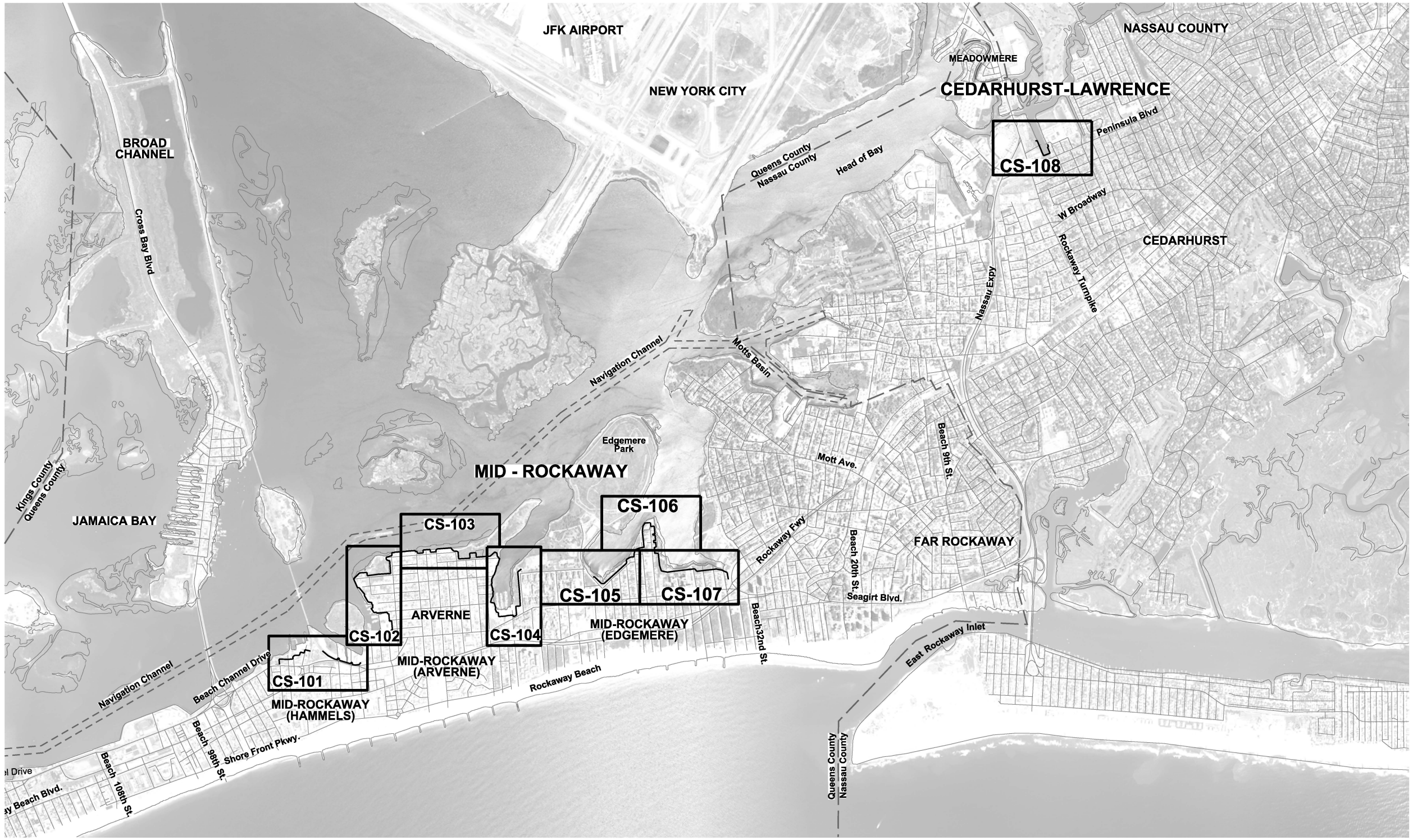

HIGH FREQUENCY FLOOD RISK REDUCTION FEATURES (HFFRRF) FOR JAMAICA BAY

PROJECT SITES: 1. MID - ROCKAWAY
2. CEDARHURST-LAWRENCE

PRELIMINARY
NOT FOR CONSTRUCTION

N

0 1500' 3000'
SCALE:1"=1500'

US Army Corps of Engineers®

MARK	DESCRIPTION	DATE	APPR.
E	FINAL GRR - APPENDIX A2-F	12.05.18	MK
D	DRAFT FINAL GRR - APPENDIX A2-E	11.19.18	MK
C	DRAFT FINAL GRR - APPENDIX A2-E	08.30.18	MK
B	DRAFT FINAL GRR - APPENDIX A2-E	08.20.18	MK
A	DRAFT FINAL GRR - APPENDIX A2-E	07.19.18	MK

DESIGNED BY: MK | DATE: 12.05.18
DWN BY: ME | CKD BY: MK | SOLICITATION NO.:
SUBMITTED BY: SA | CONTRACT NO.: W912DS-18-C-0006 | 9781-02
PLOT SCALE: 1:1 | PLOT DATE: 12/3/2018 | FILE NUMBER:
SIZE: ANSI D | FILE NAME: W912DS_A2_G-101.dgn

U.S. ARMY CORPS OF ENGINEERS
U.S. ARMY ENGINEER DISTRICT
NEW YORK
http://www.nan.usace.army.mil
MOFFATT & NICHOL
529 FIFTH AVE., 14TH FLOOR
NEW YORK, NY 10017
212-768-7454

INTEGRATED HURRICANE SANDY GENERAL RE-EVALUATION REPORT AND ENVIRONMENTAL IMPACT STATEMENT

SHEETS KEY PLAN

SHEET ID
G-101
SHEET 2 OF 26

PATH: Q:\NY\9781-02\500_CADD_Active_HFFRRF Report-App A2\
FILE: W912DS_A2_G-101.dgn
12/3/2018
11:38:54 AM
mestimable
LAST PLOTTED BY:

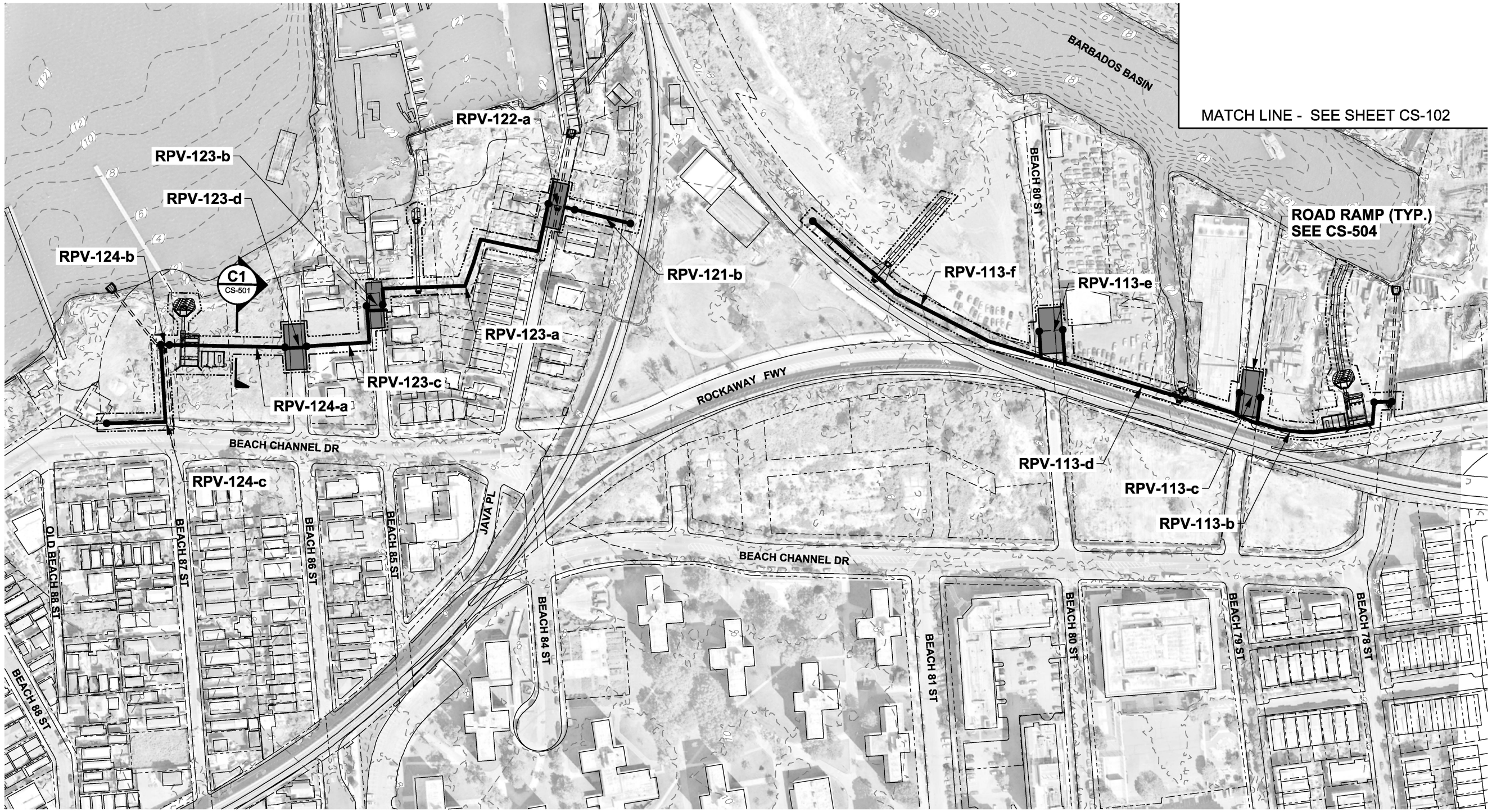

MID-ROCKAWAY - HAMMELS

NOTES

1. ALL ELEVATIONS REFERENCED TO NAVD88.
2. ELEVATION CONTOURS BASED ON THE FOLLOWING SOURCES:
   - NATIONAL GEOPHYSICAL DATA CENTER (NGDC) HURRICANE SANDY DIGITAL ELEVATION MODELS, 2014.
   - NATIONAL OCEANIC AND ATMOSPHERIC ADMINISTRATION (NOAA) DIGITAL COAST, 2014.
   - 2013-2014 U.S. GEOLOGICAL SURVEY CMGP LIDAR: POST SANDY (NEW YORK CITY), 2018.

PRELIMINARY
NOT FOR CONSTRUCTION

LEGEND

- FLOODWALL
- BULKHEAD
- REVETMENT
- BERM
- TOE OF BERM
- FLOOD PROTECTION LEVEE EASEMENT
- BANK PROTECTION EASEMENT
- TAX LOT PROPERTY LINE
- RPV-### REACH ID
- 4 EXISTING CONTOURS (LANDSIDE)
- (4) EXISTING CONTOURS (BATHYMETRY)
- INTERTIDAL MARSH SALTMEADOW HAY
- INTERTIDAL MARSH SMOOTH CORDGRASS
- HIGH MARSH SCRUB-SHRUB
- MARITIME FOREST

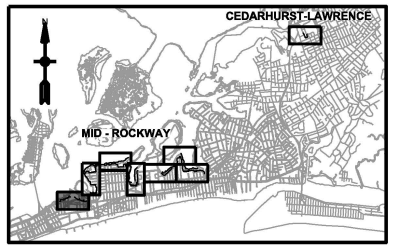

KEY PLAN

N

0 100' 200'

SCALE:1"=100'

US Army Corps of Engineers®

MARK	DESCRIPTION	DATE	APPR.
E	FINAL GRR - APPENDIX A2-F	12.05.18	MK
D	DRAFT FINAL GRR - APPENDIX A2-E	11.19.18	MK
C	DRAFT FINAL GRR - APPENDIX A2-E	08.30.18	MK
B	DRAFT FINAL GRR - APPENDIX A2-E	08.20.18	MK
A	DRAFT FINAL GRR - APPENDIX A2-E	07.19.18	MK

U.S. ARMY CORPS OF ENGINEERS
U.S. ARMY ENGINEER DISTRICT
NEW YORK
http://www.nan.usace.army.mil
MOFFATT & NICHOL
529 FIFTH AVE., 14TH FLOOR
NEW YORK, NY 10017
212-768-7454

DESIGNED BY: IK | DATE: 12.05.18
DWN BY: ME | CKD BY: MK | SOLICITATION NO.:
SUBMITTED BY: SA | CONTRACT NO.: W912-02
PLOT SCALE: 1:2 | PLOT DATE: 12/3/2018 | FILE NUMBER:
SIZE: ANSI D | FILE NAME: W912DS_A2_CS-101.dgn

INTEGRATED HURRICANE SANDY GENERAL RE-EVALUATION REPORT AND ENVIRONMENTAL IMPACT STATEMENT

SITE PLAN (1 OF 8)

SHEET ID
CS-101
SHEET 3 OF 26

PATH: Q:\NY\9781-02\500_CADD_Active_HFFRRF Report-App A2\
FILE: W912DS_A2_CS-101.dgn
12/3/2018 11:33:36 AM
LAST PLOTTED BY: mestimable

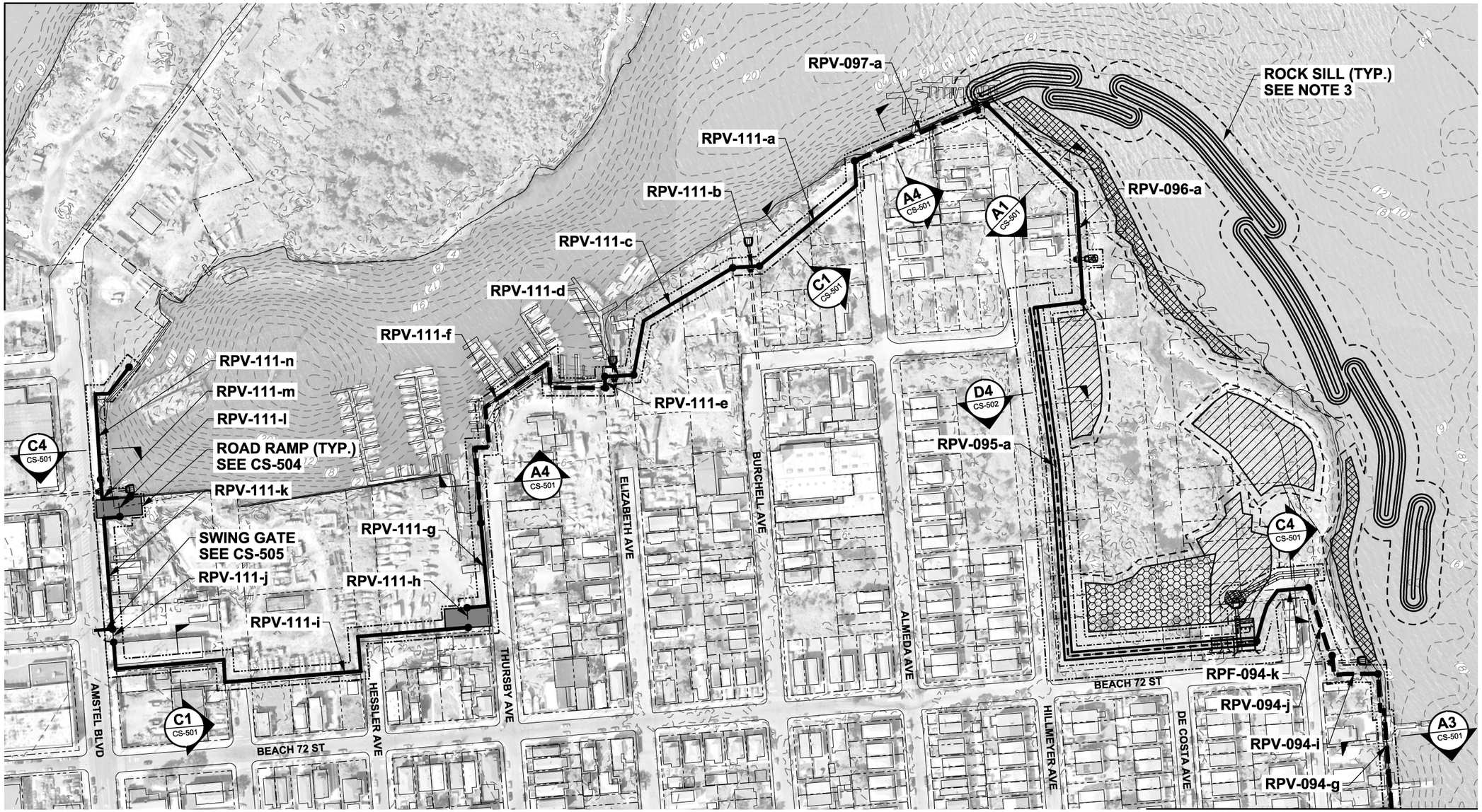

MID-ROCKAWAY - ARVERNE (SHEET 1)

SCALE: 1" = 100'

NOTES

1. ALL ELEVATIONS REFERENCED TO NAVD88.
2. ELEVATION CONTOURS BASED ON THE FOLLOWING SOURCES:
   - NATIONAL GEOPHYSICAL DATA CENTER (NGDC) HURRICANE SANDY DIGITAL ELEVATION MODELS, 2014.
   - NATIONAL OCEANIC AND ATMOSPHERIC ADMINISTRATION (NOAA) DIGITAL COAST, 2014.
   - 2013-2014 U.S. GEOLOGICAL SURVEY CMGP LIDAR: POST SANDY (NEW YORK CITY), 2018.
3. THE OVERLAP IN ROCK SILL DESIGN IS TO ALLOW FOR EXCHANGE OF WATER AND AQUATIC ORGANISMS DURING TIDAL CYCLES. THE OVERLAP DESIGN ALLOWS FOR THE TRANSFER BUT ALSO PROVIDES CONTINUOUS SHORELINE PROTECTION.

PRELIMINARY
NOT FOR CONSTRUCTION

LEGEND

- FLOODWALL
- BULKHEAD
- REVETMENT
- BERM
- TOE OF BERM
- FLOOD PROTECTION LEVEE EASEMENT
- BANK PROTECTION EASEMENT
- TAX LOT PROPERTY LINE
- RPV-### REACH ID
- 4 EXISTING CONTOURS (LANDSIDE)
- (4) EXISTING CONTOURS (BATHYMETRY)
- INTERTIDAL MARSH SALTMEADOW HAY
- INTERTIDAL MARSH SMOOTH CORDGRASS
- HIGH MARSH SCRUB-SHRUB
- MARITIME FOREST

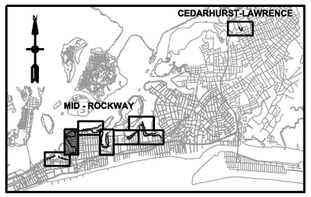

KEY PLAN

0 100' 200'

SCALE:1"=100'

US Army Corps of Engineers®

MARK	DESCRIPTION	DATE	APPR.
E	FINAL GRR - APPENDIX A2-F	12.05.18	MK
D	DRAFT FINAL GRR - APPENDIX A2-E	11.19.18	MK
C	DRAFT FINAL GRR - APPENDIX A2-E	08.30.18	MK
B	DRAFT FINAL GRR - APPENDIX A2-E	08.20.18	MK
A	DRAFT FINAL GRR - APPENDIX A2-E	07.19.18	MK

DESIGNED BY: IK | DATE: 12.05.18
DWN BY: MIE | CKD BY: MK | SOLICITATION NO.:
SUBMITTED BY: SA | CONTRACT NO.: W912-J2
PLOT SCALE: 1:50000' | PLOT DATE: 12/3/2018 | FILE NUMBER:
SIZE: ANSI D | FILE NAME: W912DS_A2_CS-102.dgn

U.S. ARMY CORPS OF ENGINEERS
U.S. ARMY ENGINEER DISTRICT
NEW YORK
http://www.nan.usace.army.mil
MOFFATT & NICHOL
529 FIFTH AVE., 14TH FLOOR
NEW YORK, NY 10017
212-768-7454

INTEGRATED HURRICANE SANDY GENERAL RE-EVALUATION REPORT AND ENVIRONMENTAL IMPACT STATEMENT

SITE PLAN (2 OF 8)

SHEET ID
CS-102
SHEET 4 OF 26

PATH: Q:\NY\9781-02\500_CADD_Active_HFFRRF Report-App A2\
FILE: W912DS_A2_CS-102.dgn
LAST PLOTTED BY: mestimable 11:33:53 AM 12/3/2018

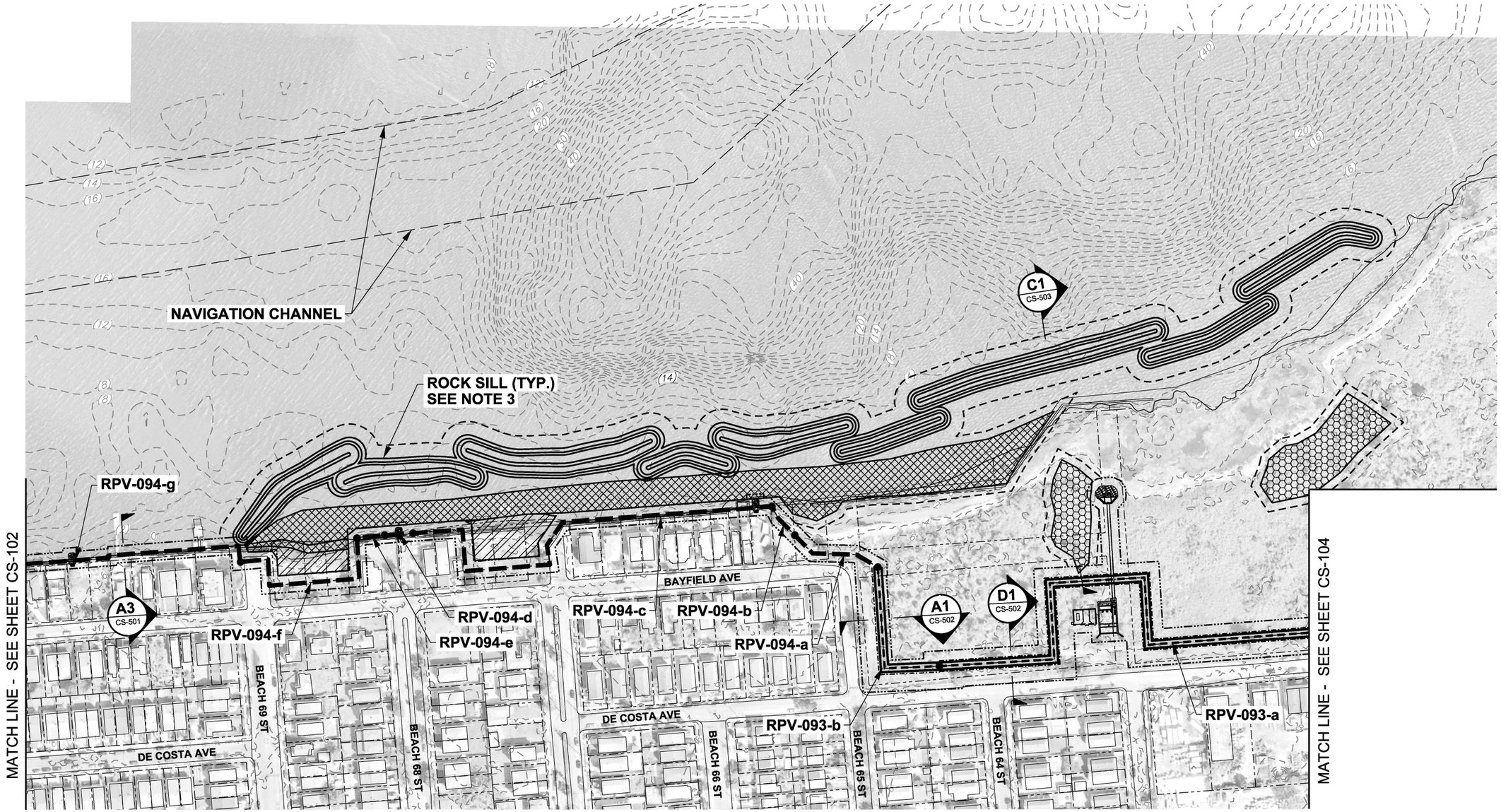

MID-ROCKAWAY - ARVERNE (SHEET 2)

SCALE: 1" = 100'

NOTES

1. ALL ELEVATIONS REFERENCED TO NAVD88.
2. ELEVATION CONTOURS BASED ON THE FOLLOWING SOURCES:
   - NATIONAL GEOPHYSICAL DATA CENTER (NGDC) HURRICANE SANDY DIGITAL ELEVATION MODELS, 2014.
   - NATIONAL OCEANIC AND ATMOSPHERIC ADMINISTRATION (NOAA) DIGITAL COAST, 2014.
   - 2013-2014 U.S. GEOLOGICAL SURVEY CMGP LIDAR: POST SANDY (NEW YORK CITY), 2018.
3. THE OVERLAP IN ROCK SILL DESIGN IS TO ALLOW FOR EXCHANGE OF WATER AND AQUATIC ORGANISMS DURING TIDAL CYCLES. THE OVERLAP DESIGN ALLOWS FOR THE TRANSFER BUT ALSO PROVIDES CONTINUOUS SHORELINE PROTECTION.

PRELIMINARY
NOT FOR CONSTRUCTION

LEGEND

- FLOODWALL
- BULKHEAD
- REVETMENT
- BERM
- TOE OF BERM
- FLOOD PROTECTION LEVEE EASEMENT
- BANK PROTECTION EASEMENT
- TAX LOT PROPERTY LINE
- RPV-### REACH ID
- 4 EXISTING CONTOURS (LANDSIDE)
- (4) EXISTING CONTOURS (BATHYMETRY)
- INTERTIDAL MARSH SALTMEADOW HAY
- INTERTIDAL MARSH SMOOTH CORDGRASS
- HIGH MARSH SCRUB-SHRUB
- MARITIME FOREST

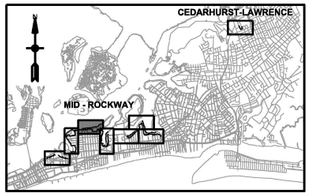

KEY PLAN

N

0 100' 200'

SCALE:1"=100'

US Army Corps of Engineers®

MARK	DESCRIPTION	DATE	APPR.
E	FINAL GRR - APPENDIX A2-F	12.05.18	MK
D	DRAFT FINAL GRR - APPENDIX A2-E	11.19.18	MK
C	DRAFT FINAL GRR - APPENDIX A2-E	08.30.18	MK
B	DRAFT FINAL GRR - APPENDIX A2-E	08.20.18	MK
A	DRAFT FINAL GRR - APPENDIX A2-E	07.19.18	MK

U.S. ARMY CORPS OF ENGINEERS
U.S. ARMY ENGINEER DISTRICT
NEW YORK
http://www.nan.usace.army.mil
MOFFATT & NICHOL
529 FIFTH AVE., 14TH FLOOR
NEW YORK, NY 10017
212-768-7454

DESIGNED BY: IK	DATE: 12.05.18
DWN BY: ME	CKD BY: MK
SUBMITTED BY: SA	SOLICITATION NO.:
PLOT SCALE: 1:200000'	CONTRACT NO.: W912DS-02
PLOT DATE: 12/3/2018	FILE NUMBER:
SIZE: ANSI D	FILE NAME: W912DS_A2_CS-103.dgn

INTEGRATED HURRICANE SANDY GENERAL RE-EVALUATION REPORT AND ENVIRONMENTAL IMPACT STATEMENT

SITE PLAN (3 OF 8)

SHEET ID
CS-103
SHEET 5 OF 26

PATH: Q:\NY\9781-02\500_CADD_Active_HFFRRF Report-App A2\
FILE: W912DS_A2_CS-103.dgn
12/3/2018 11:34:11 AM
LAST PLOTTED BY: mestimable

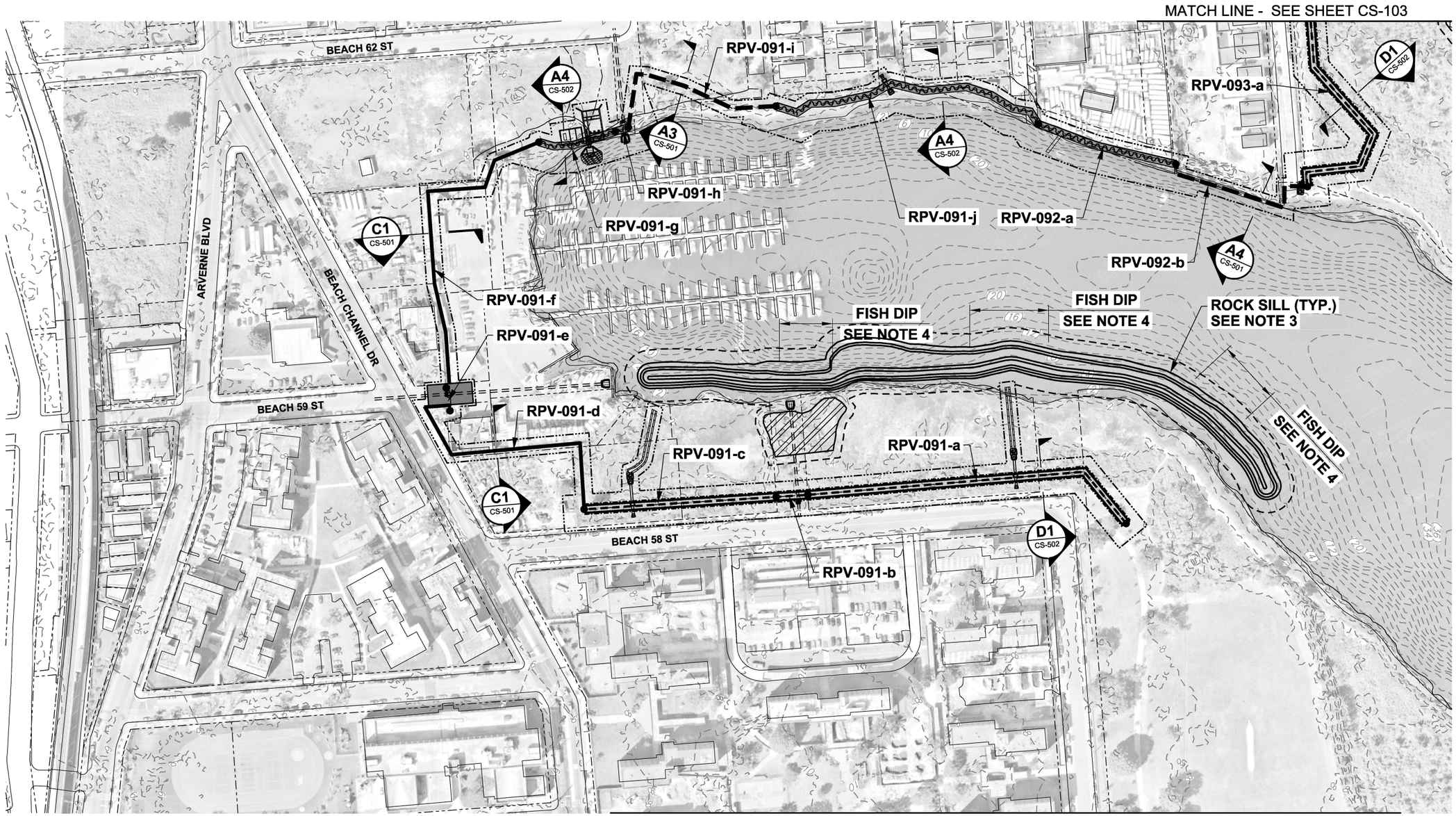

MID-ROCKAWAY - ARVERNE (SHEET 3)

SCALE: 1" = 100'

NOTES

1. ALL ELEVATIONS REFERENCED TO NAVD88.
2. ELEVATION CONTOURS BASED ON THE FOLLOWING SOURCES:
   - NATIONAL GEOPHYSICAL DATA CENTER (NGDC) HURRICANE SANDY DIGITAL ELEVATION MODELS, 2014.
   - NATIONAL OCEANIC AND ATMOSPHERIC ADMINISTRATION (NOAA) DIGITAL COAST, 2014.
   - 2013-2014 U.S. GEOLOGICAL SURVEY CMGP LIDAR: POST SANDY (NEW YORK CITY), 2018.
3. THE OVERLAP IN ROCK SILL DESIGN IS TO ALLOW FOR EXCHANGE OF WATER AND AQUATIC ORGANISMS DURING TIDAL CYCLES. THE OVERLAP DESIGN ALLOWS FOR THE TRANSFER BUT ALSO PROVIDES CONTINUOUS SHORELINE PROTECTION.
4. IN LOCATIONS WHERE THE BATHYMETRY PROFILE DOES NOT ALLOW FOR OVERLAP, TO PROVIDE FOR SUFFICIENT HYDRAULIC COMMUNICATION AND ORGANISM EXCHANGE BEHIND THE ROCK SILLS, THE PLACEMENT OF PERIODIC LOWERED ROCK SILL ELEVATIONS (FISH DIPS) OF 0.0 FEET MSL OF 100 FEET ARE PROVIDED.

PRELIMINARY
NOT FOR CONSTRUCTION

LEGEND

- FLOODWALL
- BULKHEAD
- REVETMENT
- BERM
- TOE OF BERM
- FLOOD PROTECTION LEVEE EASEMENT
- BANK PROTECTION EASEMENT
- TAX LOT PROPERTY LINE
- RPV-### REACH ID
- 4 EXISTING CONTOURS (LANDSIDE)
- (4) EXISTING CONTOURS (BATHYMETRY)
- INTERTIDAL MARSH SALTMEADOW HAY
- INTERTIDAL MARSH SMOOTH CORDGRASS
- HIGH MARSH SCRUB-SHRUB
- MARITIME FOREST

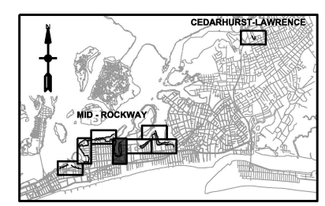

KEY PLAN

N

0 100' 200'

SCALE:1"=100'

US Army Corps of Engineers®

MARK	DESCRIPTION	DATE	APPR.
E	FINAL GRR - APPENDIX A2-F	12.05.18	MK
D	DRAFT FINAL GRR - APPENDIX A2-E	11.19.18	MK
C	DRAFT FINAL GRR - APPENDIX A2-E	08.30.18	MK
B	DRAFT FINAL GRR - APPENDIX A2-E	08.20.18	MK
A	DRAFT FINAL GRR - APPENDIX A2-E	07.19.18	MK

U.S. ARMY CORPS OF ENGINEERS
U.S. ARMY ENGINEER DISTRICT
NEW YORK
http://www.nan.usace.army.mil

MOFFATT & NICHOL
529 FIFTH AVE., 14TH FLOOR
NEW YORK, NY 10017
212-768-7454

DESIGNED BY: IK | DWN BY: ME | CKD BY: MK | SUBMITTED BY: SA | PLOT SCALE: 1:1.00000 | PLOT DATE: 11/20/2018 | SIZE: ANSI D | FILE NAME: W912DS_A2_CS-104.dgn | DATE: 12.05.18 | SOLICITATION NO.: | CONTRACT NO.: W912-02 | FILE NUMBER:

INTEGRATED HURRICANE SANDY GENERAL RE-EVALUATION REPORT AND ENVIRONMENTAL IMPACT STATEMENT

SITE PLAN (4 OF 8)

SHEET ID
CS-104
SHEET 6 OF 26

PATH: Q:\NY\9781-02\500_CADD_Active_HFFRRF Report-App A2\
FILE: W912DS_A2_CS-104.dgn
12/3/2018 11:34:28 AM mestimable
LAST PLOTTED BY:

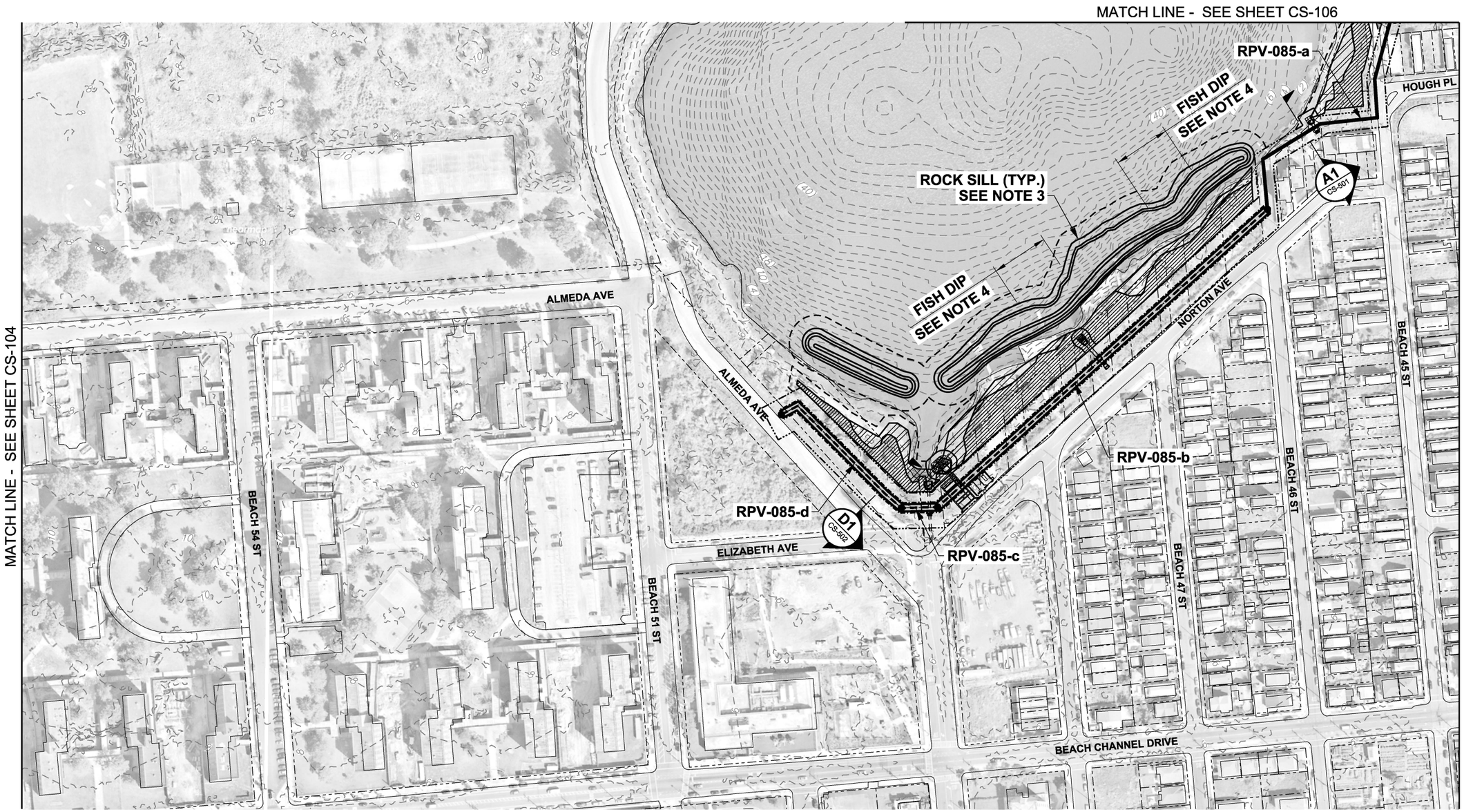

MID-ROCKAWAY - EDGEMERE (SHEET 1)

SCALE: 1" = 100'

NOTES

1. ALL ELEVATIONS REFERENCED TO NAVD88.
2. ELEVATION CONTOURS BASED ON THE FOLLOWING SOURCES:
   - NATIONAL GEOPHYSICAL DATA CENTER (NGDC) HURRICANE SANDY DIGITAL ELEVATION MODELS, 2014.
   - NATIONAL OCEANIC AND ATMOSPHERIC ADMINISTRATION (NOAA) DIGITAL COAST, 2014.
   - 2013-2014 U.S. GEOLOGICAL SURVEY CMGP LIDAR: POST SANDY (NEW YORK CITY), 2018.
3. THE OVERLAP IN ROCK SILL DESIGN IS TO ALLOW FOR EXCHANGE OF WATER AND AQUATIC ORGANISMS DURING TIDAL CYCLES. THE OVERLAP DESIGN ALLOWS FOR THE TRANSFER BUT ALSO PROVIDES CONTINUOUS SHORELINE PROTECTION.
4. IN LOCATIONS WHERE THE BATHYMETRY PROFILE DOES NOT ALLOW FOR OVERLAP, TO PROVIDE FOR SUFFICIENT HYDRAULIC COMMUNICATION AND ORGANISM EXCHANGE BEHIND THE ROCK SILLS, THE PLACEMENT OF PERIODIC LOWERED ROCK SILL ELEVATIONS (FISH DIPS) OF 0.0 FEET MSL OF 100 FEET ARE PROVIDED.

PRELIMINARY
NOT FOR CONSTRUCTION

LEGEND

- FLOODWALL
- BULKHEAD
- REVETMENT
- BERM
- TOE OF BERM
- FLOOD PROTECTION LEVEE EASEMENT
- BANK PROTECTION EASEMENT
- TAX LOT PROPERTY LINE
- RPV-### REACH ID
- 4 EXISTING CONTOURS (LANDSIDE)
- (4) EXISTING CONTOURS (BATHYMETRY)
- INTERTIDAL MARSH SALTMEADOW HAY
- INTERTIDAL MARSH SMOOTH CORDGRASS
- HIGH MARSH SCRUB-SHRUB
- MARITIME FOREST

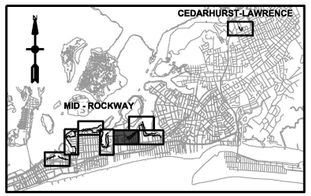

KEY PLAN

N

0 100' 200'

SCALE:1"=100'

US Army Corps of Engineers®

MARK	DESCRIPTION	DATE	APPR.
E	FINAL GRR - APPENDIX A2-F	12.05.18	MK
D	DRAFT FINAL GRR - APPENDIX A2-E	11.19.18	MK
C	DRAFT FINAL GRR - APPENDIX A2-E	08.30.18	MK
B	DRAFT FINAL GRR - APPENDIX A2-E	08.20.18	MK
A	DRAFT FINAL GRR - APPENDIX A2-E	07.19.18	MK

U.S. ARMY CORPS OF ENGINEERS
U.S. ARMY ENGINEER DISTRICT
NEW YORK
http://www.nan.usace.army.mil

MOFFATT & NICHOL
529 FIFTH AVE., 14TH FLOOR
NEW YORK, NY 10017
212-768-7454

DESIGNED BY: IK	DATE: 12.05.18
DWN BY: ME	CKD BY: MK
SUBMITTED BY: SA	SOLICITATION NO.:
PLOT SCALE: 1:1.66667	CONTRACT NO.: W912-02
PLOT DATE: 12/3/2018	FILE NUMBER:
SIZE: ANSI D	FILE NAME: W912DS_A2_CS-105.dgn

INTEGRATED HURRICANE SANDY GENERAL RE-EVALUATION REPORT AND ENVIRONMENTAL IMPACT STATEMENT

SITE PLAN (5 OF 8)

SHEET ID
CS-105
SHEET 7 OF 26

PATH: Q:\NY\9781-02\500_CADD_Active_HFFRRF Report-App A2\
FILE: W912DS_A2_CS-105.dgn
12/3/2018 11:34:47 AM mestimable
LAST PLOTTED BY:

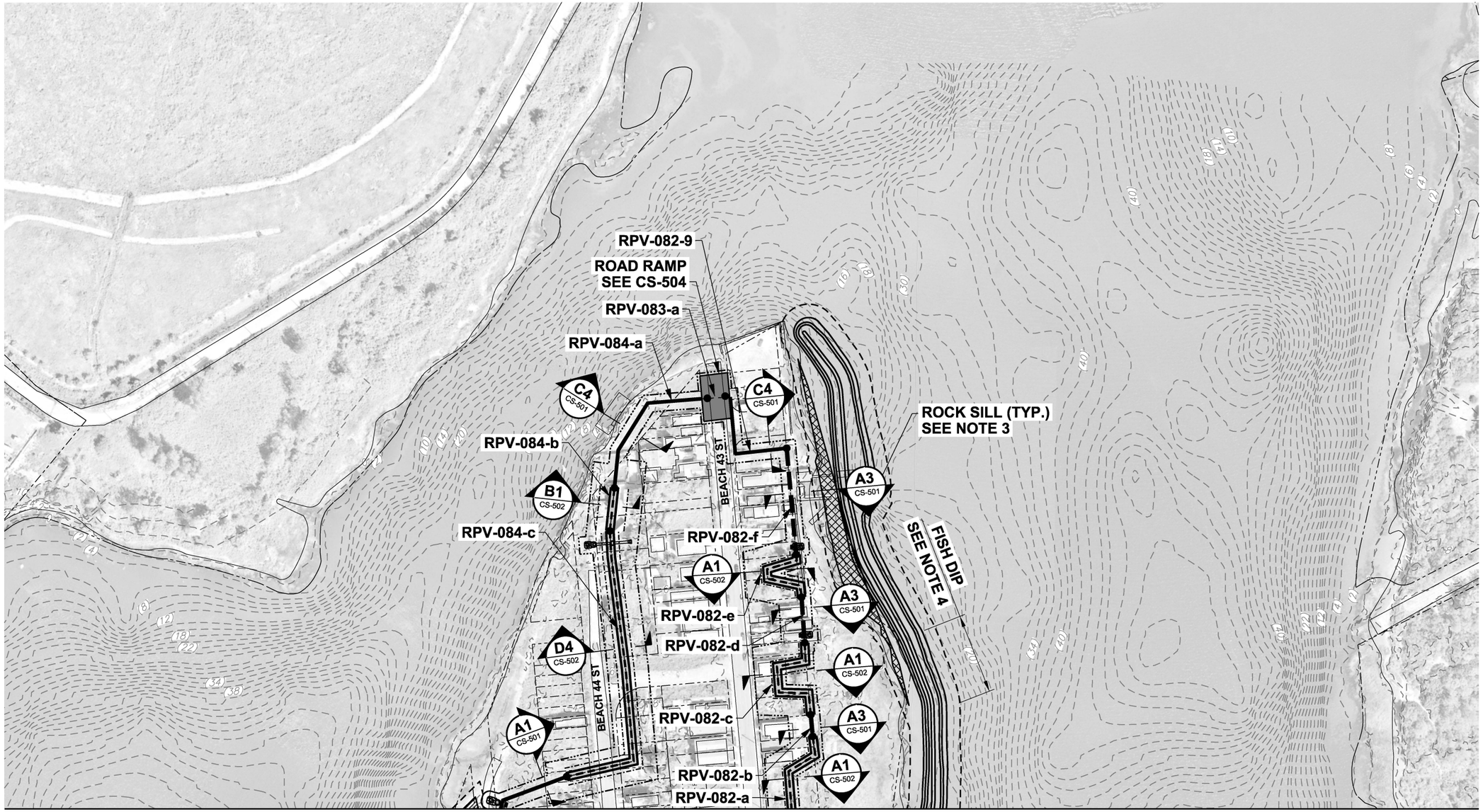

MATCH LINE - SEE SHEET CS-105

MATCH LINE - SEE SHEET CS-107

MID-ROCKAWAY - EDGEMERE (SHEET 2)

SCALE: 1" = 100'

NOTES

1. ALL ELEVATIONS REFERENCED TO NAVD88.
2. ELEVATION CONTOURS BASED ON THE FOLLOWING SOURCES:
   - NATIONAL GEOPHYSICAL DATA CENTER (NGDC) HURRICANE SANDY DIGITAL ELEVATION MODELS, 2014.
   - NATIONAL OCEANIC AND ATMOSPHERIC ADMINISTRATION (NOAA) DIGITAL COAST, 2014.
   - 2013-2014 U.S. GEOLOGICAL SURVEY CMGP LIDAR: POST SANDY (NEW YORK CITY), 2018.
3. THE OVERLAP IN ROCK SILL DESIGN IS TO ALLOW FOR EXCHANGE OF WATER AND AQUATIC ORGANISMS DURING TIDAL CYCLES. THE OVERLAP DESIGN ALLOWS FOR THE TRANSFER BUT ALSO PROVIDES CONTINUOUS SHORELINE PROTECTION.
4. IN LOCATIONS WHERE THE BATHYMETRY PROFILE DOES NOT ALLOW FOR OVERLAP, TO PROVIDE FOR SUFFICIENT HYDRAULIC COMMUNICATION AND ORGANISM EXCHANGE BEHIND THE ROCK SILLS, THE PLACEMENT OF PERIODIC LOWERED ROCK SILL ELEVATIONS (FISH DIPS) OF 0.0 FEET MSL OF 100 FEET ARE PROVIDED.

PRELIMINARY
NOT FOR CONSTRUCTION

LEGEND

- FLOODWALL
- BULKHEAD
- REVETMENT
- BERM
- TOE OF BERM
- FLOOD PROTECTION LEVEE EASEMENT
- BANK PROTECTION EASEMENT
- TAX LOT PROPERTY LINE
- RPV-### REACH ID
- 4 EXISTING CONTOURS (LANDSIDE)
- (4) EXISTING CONTOURS (BATHYMETRY)
- INTERTIDAL MARSH SALTMEADOW HAY
- INTERTIDAL MARSH SMOOTH CORDGRASS
- HIGH MARSH SCRUB-SHRUB
- MARITIME FOREST

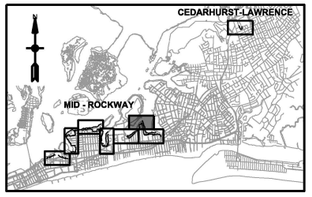

KEY PLAN

N

0 100' 200'

SCALE:1"=100'

US Army Corps of Engineers®

MARK	DESCRIPTION	DATE	APPR.
E	FINAL GRR - APPENDIX A2-F	12.05.18	MK
D	DRAFT FINAL GRR - APPENDIX A2-E	11.19.18	MK
C	DRAFT FINAL GRR - APPENDIX A2-E	08.30.18	MK
B	DRAFT FINAL GRR - APPENDIX A2-E	08.20.18	MK
A	DRAFT FINAL GRR - APPENDIX A2-E	07.19.18	MK

U.S. ARMY CORPS OF ENGINEERS
U.S. ARMY ENGINEER DISTRICT
NEW YORK
http://www.nan.usace.army.mil

MOFFATT & NICHOL
529 FIFTH AVE., 14TH FLOOR
NEW YORK, NY 10017
212-768-7454

DESIGNED BY: IK | DATE: 12.05.18
DWN BY: ME | CKD BY: MK | SOLICITATION NO.:
SUBMITTED BY: SA | CONTRACT NO.: W912-02
PLOT SCALE: 1:1 | PLOT DATE: 12/3/2018 | FILE NUMBER:
SIZE: ANSI D | FILE NAME: W912DS_A2_CS-106.dgn

INTEGRATED HURRICANE SANDY GENERAL RE-EVALUATION REPORT AND ENVIRONMENTAL IMPACT STATEMENT

SITE PLAN (6 OF 8)

SHEET ID
CS-106
SHEET 8 OF 26

PATH: Q:\NY\9781-02\500_CADD_Active_HFFRRF Report-App A2\
FILE: W912DS_A2_CS-106.dgn
12/3/2018 11:35:08 AM
LAST PLOTTED BY: mestimable

MATCH LINE - SEE SHEET CS-106

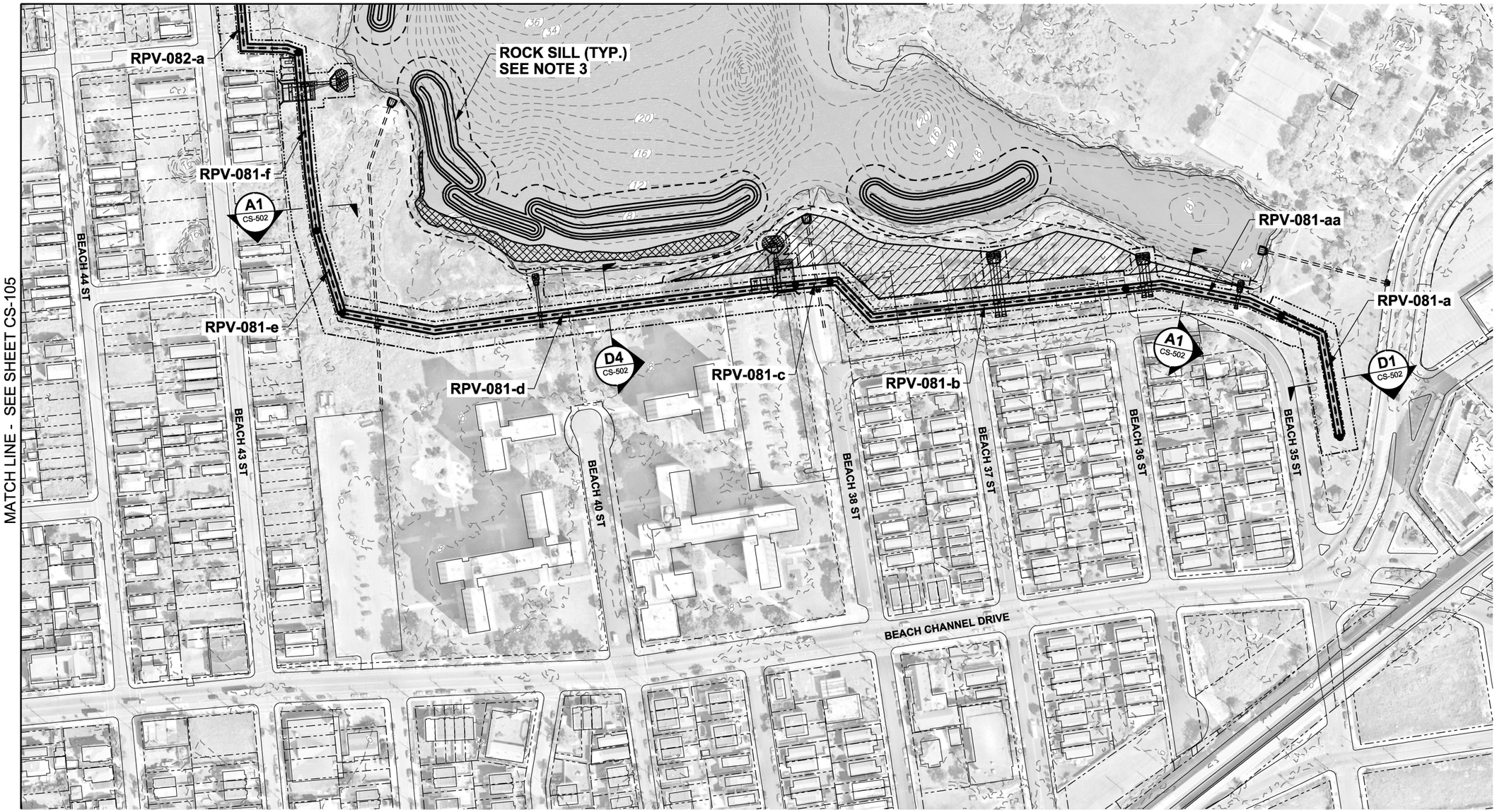

MATCH LINE - SEE SHEET CS-105

MID-ROCKAWAY - EDGEMERE (SHEET 3)

SCALE: 1" = 100'

NOTES

1. ALL ELEVATIONS REFERENCED TO NAVD88.
2. ELEVATION CONTOURS BASED ON THE FOLLOWING SOURCES:
   - NATIONAL GEOPHYSICAL DATA CENTER (NGDC) HURRICANE SANDY DIGITAL ELEVATION MODELS, 2014.
   - NATIONAL OCEANIC AND ATMOSPHERIC ADMINISTRATION (NOAA) DIGITAL COAST, 2014.
   - 2013-2014 U.S. GEOLOGICAL SURVEY CMGP LIDAR: POST SANDY (NEW YORK CITY), 2018.
3. THE OVERLAP IN ROCK SILL DESIGN IS TO ALLOW FOR EXCHANGE OF WATER AND AQUATIC ORGANISMS DURING TIDAL CYCLES. THE OVERLAP DESIGN ALLOWS FOR THE TRANSFER BUT ALSO PROVIDES CONTINUOUS SHORELINE PROTECTION.
4. IN LOCATIONS WHERE THE BATHYMETRY PROFILE DOES NOT ALLOW FOR OVERLAP, TO PROVIDE FOR SUFFICIENT HYDRAULIC COMMUNICATION AND ORGANISM EXCHANGE BEHIND THE ROCK SILLS, THE PLACEMENT OF PERIODIC LOWERED ROCK SILL ELEVATIONS (FISH DIPS) OF 0.0 FEET MSL OF 100 FEET ARE PROVIDED.

PRELIMINARY
NOT FOR CONSTRUCTION

LEGEND

- FLOODWALL
- BULKHEAD
- REVETMENT
- BERM
- TOE OF BERM
- FLOOD PROTECTION LEVEE EASEMENT
- BANK PROTECTION EASEMENT
- TAX LOT PROPERTY LINE
- RPV-### REACH ID
- 4 EXISTING CONTOURS (LANDSIDE)
- (4) EXISTING CONTOURS (BATHYMETRY)
- INTERTIDAL MARSH SALTMEADOW HAY
- INTERTIDAL MARSH SMOOTH CORDGRASS
- HIGH MARSH SCRUB-SHRUB
- MARITIME FOREST

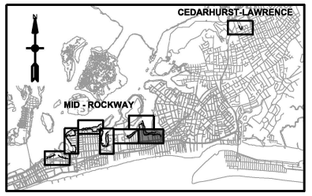

KEY PLAN

N

0 100' 200'

SCALE:1"=100'

US Army Corps of Engineers®

MARK	DESCRIPTION	DATE	APPR.
E	FINAL GRR - APPENDIX A2-F	12.05.18	MK
D	DRAFT FINAL GRR - APPENDIX A2-E	11.19.18	MK
C	DRAFT FINAL GRR - APPENDIX A2-E	08.30.18	MK
B	DRAFT FINAL GRR - APPENDIX A2-E	08.20.18	MK
A	DRAFT FINAL GRR - APPENDIX A2-E	07.19.18	MK

U.S. ARMY CORPS OF ENGINEERS
U.S. ARMY ENGINEER DISTRICT
NEW YORK
http://www.nan.usace.army.mil

MOFFATT & NICHOL
529 FIFTH AVE., 14TH FLOOR
NEW YORK, NY 10017
212-768-7454

DESIGNED BY: IK
DWN BY: ME
CKD BY: MK
SUBMITTED BY: SA
PLOT SCALE: 1:1
PLOT DATE: 12/3/2018
SIZE: ANSI D
FILE NAME: W912DS_A2_CS-107.dgn
DATE: 12.05.18
SOLICITATION NO.:
CONTRACT NO.: W912-J2
FILE NUMBER:

INTEGRATED HURRICANE SANDY GENERAL RE-EVALUATION REPORT AND ENVIRONMENTAL IMPACT STATEMENT

SITE PLAN (7 OF 8)

SHEET ID
CS-107
SHEET 9 OF 26

PATH: Q:\NY\9781-02\500_CADD_Active_HFFRRF Report-App A2\
FILE: W912DS_A2_CS-107.dgn
LAST PLOTTED BY: mestimable 11:37:28 AM 12/3/2018

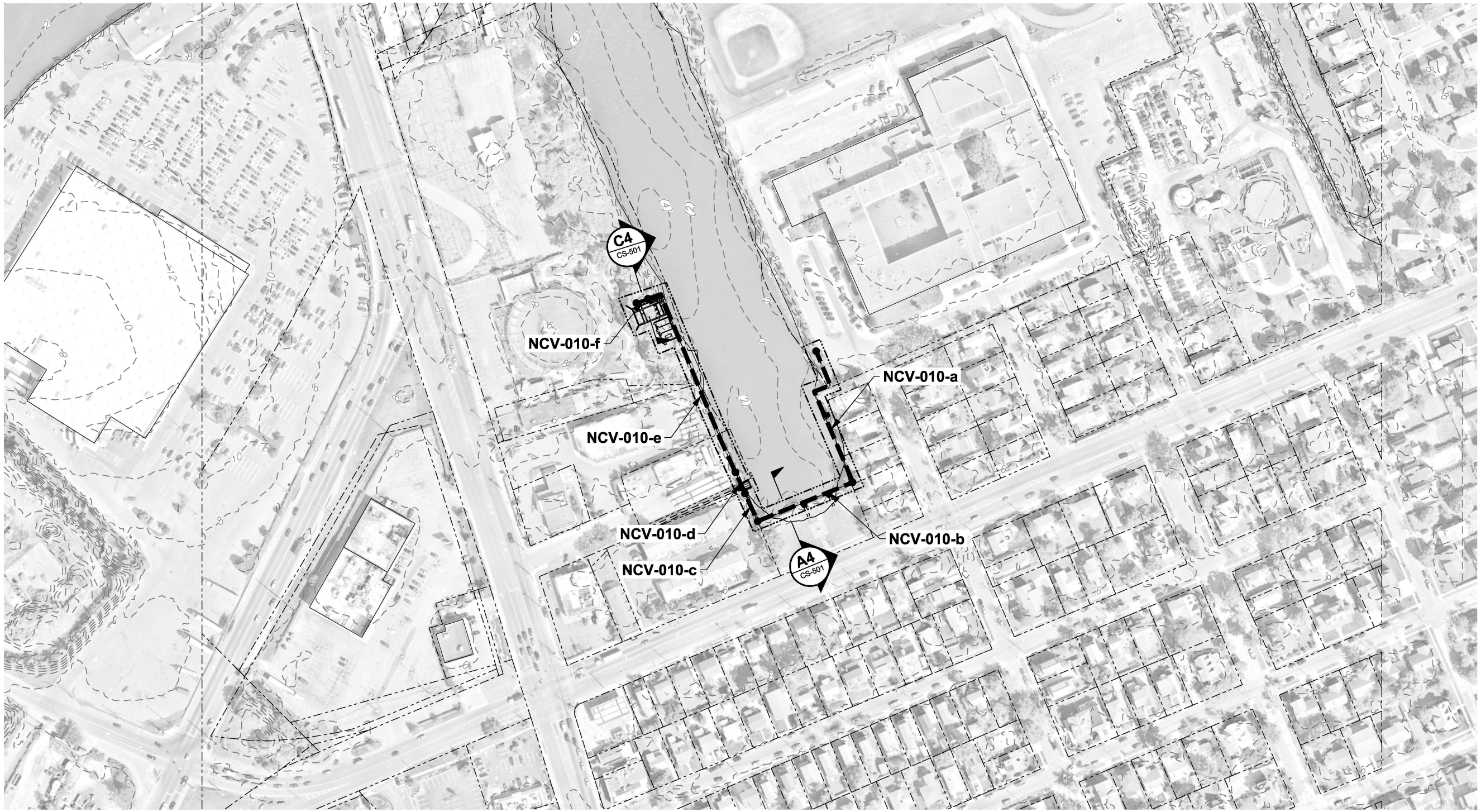

CEDARHURST-LAWRENCE

SCALE: 1" = 100'

NOTES

1. ALL ELEVATIONS REFERENCED TO NAVD88.
2. ELEVATION CONTOURS BASED ON THE FOLLOWING SOURCES:
   - NATIONAL GEOPHYSICAL DATA CENTER (NGDC) HURRICANE SANDY DIGITAL ELEVATION MODELS, 2014.
   - NATIONAL OCEANIC AND ATMOSPHERIC ADMINISTRATION (NOAA) DIGITAL COAST, 2014.
   - 2013-2014 U.S. GEOLOGICAL SURVEY CMGP LIDAR: POST SANDY (NEW YORK CITY), 2018.

PRELIMINARY
NOT FOR CONSTRUCTION

LEGEND

- FLOODWALL
- BULKHEAD
- REVETMENT
- BERM
- TOE OF BERM
- FLOOD PROTECTION LEVEE EASEMENT
- BANK PROTECTION EASEMENT
- TAX LOT PROPERTY LINE
- RPV-### REACH ID
- 4 EXISTING CONTOURS (LANDSIDE)
- (4) EXISTING CONTOURS (BATHYMETRY)
- INTERTIDAL MARSH SALTMEADOW HAY
- INTERTIDAL MARSH SMOOTH CORDGRASS
- HIGH MARSH SCRUB-SHRUB
- MARITIME FOREST

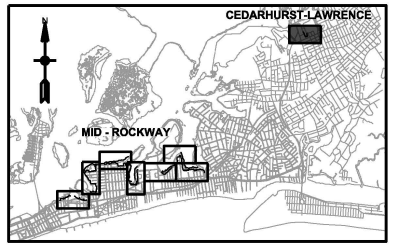

KEY PLAN

N

0 100' 200'

SCALE:1"=100'

US Army Corps of Engineers®

MARK	DESCRIPTION	DATE	APPR.
E	FINAL GRR - APPENDIX A2-F	12.05.18	MK
D	DRAFT FINAL GRR - APPENDIX A2-E	11.19.18	MK
C	DRAFT FINAL GRR - APPENDIX A2-E	08.30.18	MK
B	DRAFT FINAL GRR - APPENDIX A2-E	08.20.18	MK
A	DRAFT FINAL GRR - APPENDIX A2-E	07.19.18	MK

U.S. ARMY CORPS OF ENGINEERS
U.S. ARMY ENGINEER DISTRICT
NEW YORK
http://www.nan.usace.army.mil
MOFFATT & NICHOL
529 FIFTH AVE., 14TH FLOOR
NEW YORK, NY 10017
212-768-7454

DESIGNED BY: MK | DATE: 12.05.18
DWN BY: ME | CKD BY: MK | SOLICITATION NO.:
SUBMITTED BY: SA | CONTRACT NO.: W912-02
PLOT SCALE: 1:00667 | PLOT DATE: 12/3/2018 | FILE NUMBER:
SIZE: ANSI D | FILE NAME: W912DS_A2_CS-108.dgn

INTEGRATED HURRICANE SANDY GENERAL RE-EVALUATION REPORT AND ENVIRONMENTAL IMPACT STATEMENT

SITE PLAN (8 OF 8)

SHEET ID
CS-108
SHEET 10 OF 26

PATH: Q:\NY\9781-02\500_CADD_Active_HFFRRF Report-App A2\
FILE: W912DS_A2_CS-108.dgn
LAST PLOTTED BY: mestimable 11:37:58 AM 12/3/2018

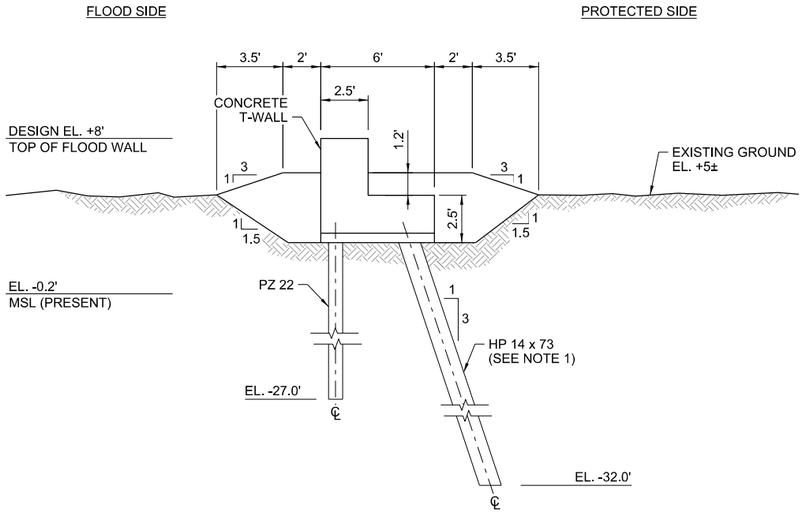

C1 LOW FLOODWALL
SCALE: 1/4" = 1'-0"
CS-101, CS-102, CS-104

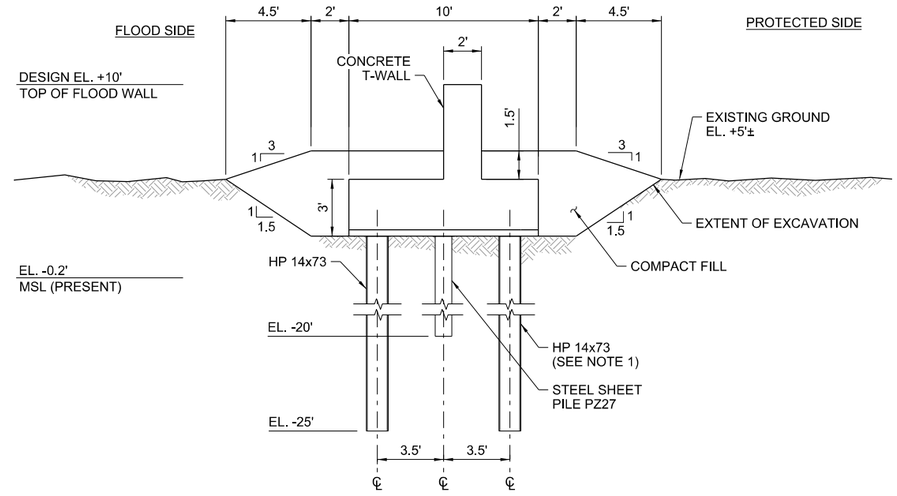

C4 MEDIUM FLOODWALL
SCALE: 1/4" = 1'-0"
CS-102, CS-106, CS-108

NOTE

1. PILE SPACINGS FOR LOW, MEDIUM, AND HIGH FLOODWALLS ARE 10', 8.5' AND 6.5', RESPECTIVELY.

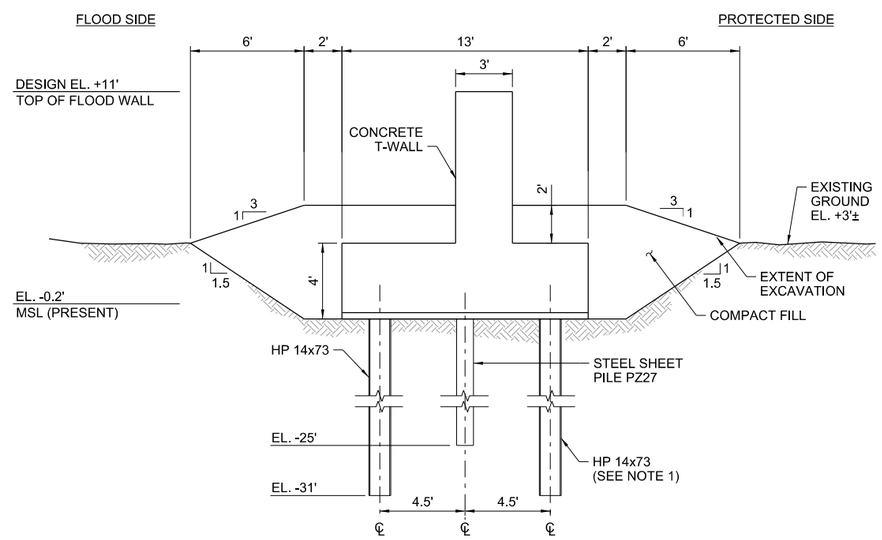

A1 HIGH FLOODWALL
SCALE: 1/4" = 1'-0"
CS-102, CS-105, CS-106

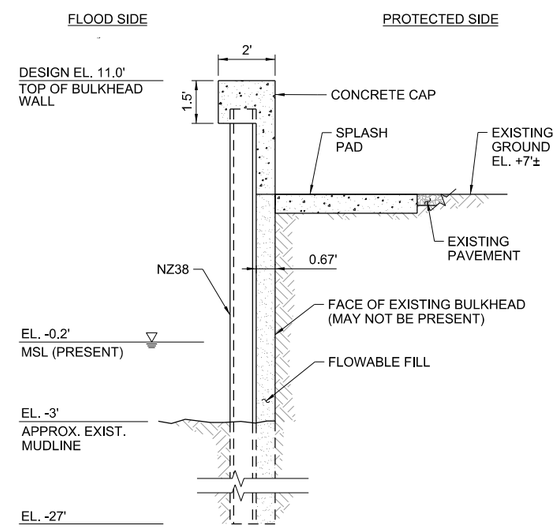

A3 SHALLOW BULKHEAD
SCALE: 3/8" = 1'-0"
CS-102, CS-103, CS-104, CS-106

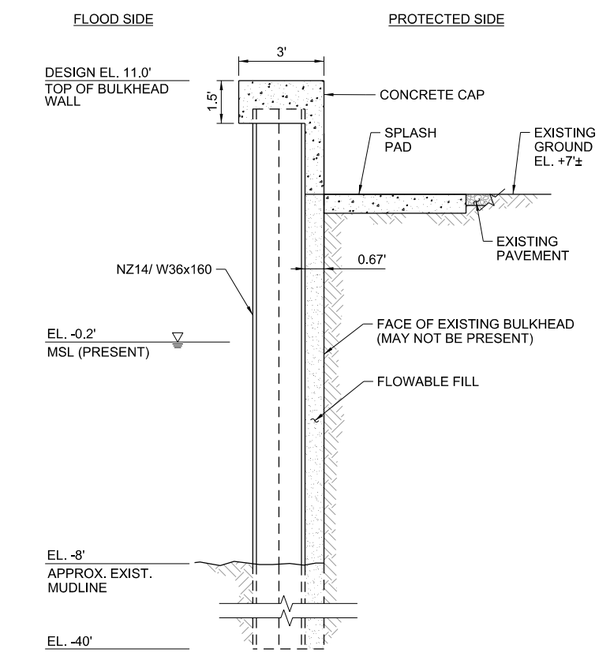

A4 DEEP BULKHEAD
SCALE: 3/8" = 1'-0"
CS-102, CS-104, CS-108

PRELIMINARY
NOT FOR CONSTRUCTION

US Army Corps of Engineers®

MARK	DESCRIPTION	DATE	APPR.
E	FINAL GRR - APPENDIX A2.F	12.05.18	MK
D	DRAFT FINAL GRR - APPENDIX A2.E	11.19.18	MK
C	DRAFT FINAL GRR - APPENDIX A2.E	08.30.18	MK
B	DRAFT FINAL GRR - APPENDIX A2.E	08.20.18	MK
A	DRAFT FINAL GRR - APPENDIX A2.E	07.19.18	MK

DESIGNED BY: JK | DATE: 12.05.18
DWN BY: ME | CKD BY: MK | SOLICITATION NO.:
SUBMITTED BY: SA | CONTRACT NO.: W912DS-12-D-0016 | 9791-02
PLOT SCALE: 1:1 | PLOT DATE: 11/30/2018 | FILE NUMBER:
SIZE: ANSI D | FILE NAME: W912DS_A2_CS-501.dgn

U.S. ARMY CORPS OF ENGINEERS
U.S. ARMY ENGINEER DISTRICT
NEW YORK
http://www.nan.usace.army.mil
MOFFATT & NICHOL
529 FIFTH AVE., 14TH FLOOR
NEW YORK, NY 10017
212-768-7454

INTEGRATED HURRICANE SANDY GENERAL RE-EVALUATION REPORT AND ENVIRONMENTAL IMPACT STATEMENT

FLOODWALL AND BULKHEAD TYPICAL SECTIONS

SHEET ID
CS-501
SHEET 11 OF 26

PATH: Q:\NY\9781-02\500_CADD_Active_HFFRRF Report-App A2\
FILE: W912DS_A2_CS-501.dgn
12/3/2018 11:39:50 AM
LAST PLOTTED BY: mestimable

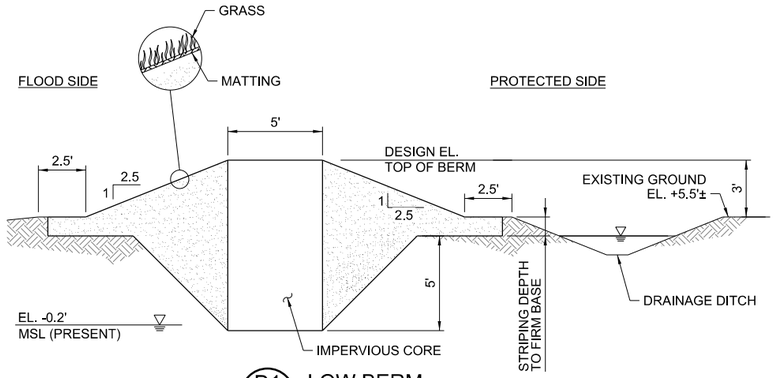

D1 LOW BERM
SCALE: 1/4" = 1'-0"
CS-103, CS-104, CS-105, CS-107

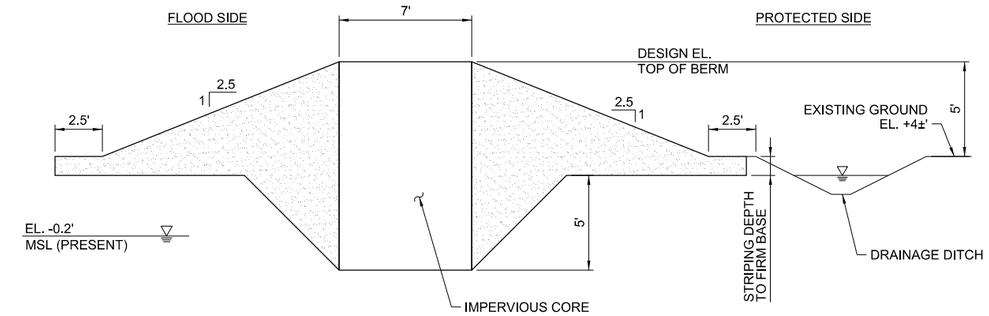

D4 MEDIUM BERM
SCALE: 1/4" = 1'-0"
CS-102, CS-106

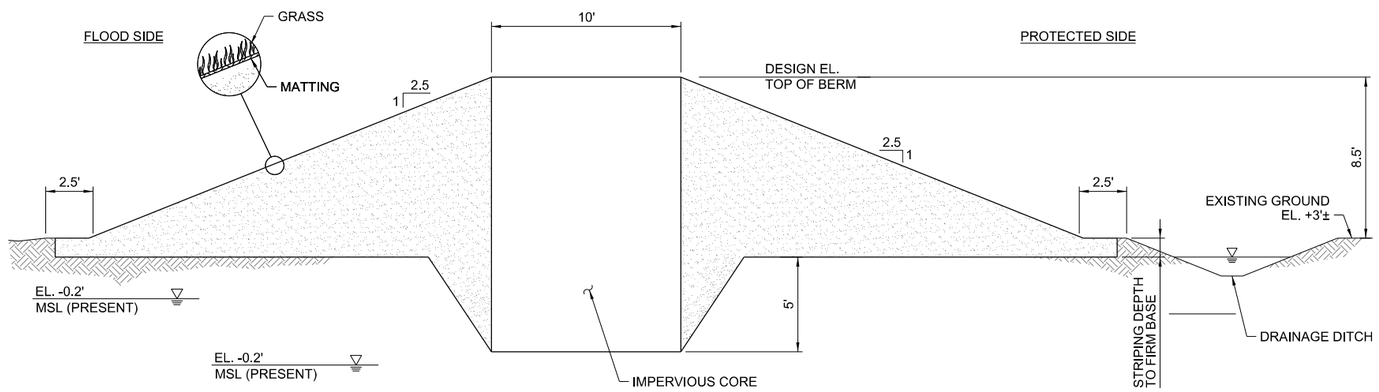

B1 HIGH BERM
CS-106
SCALE: 1/4" = 1'-0"

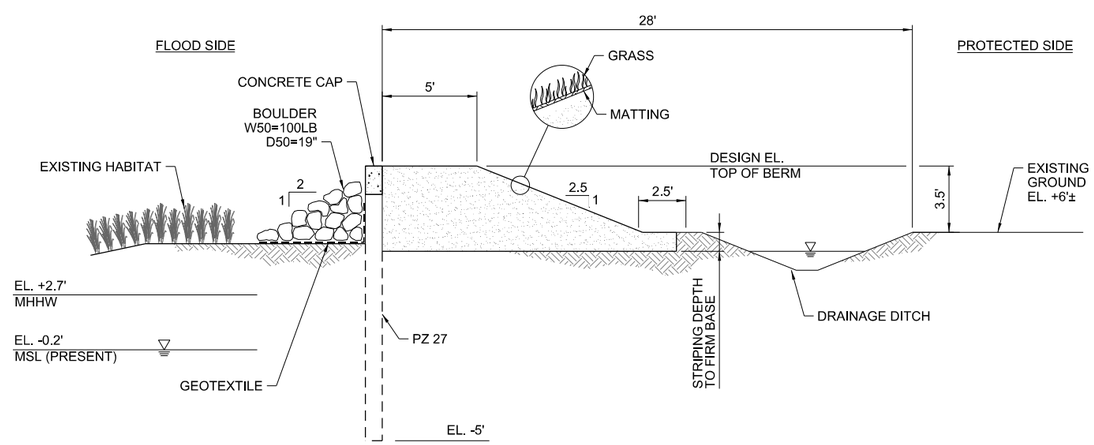

A1 HYBRID BERM
SCALE: 1/4" = 1'-0"
CS-103, CS-106, CS-107

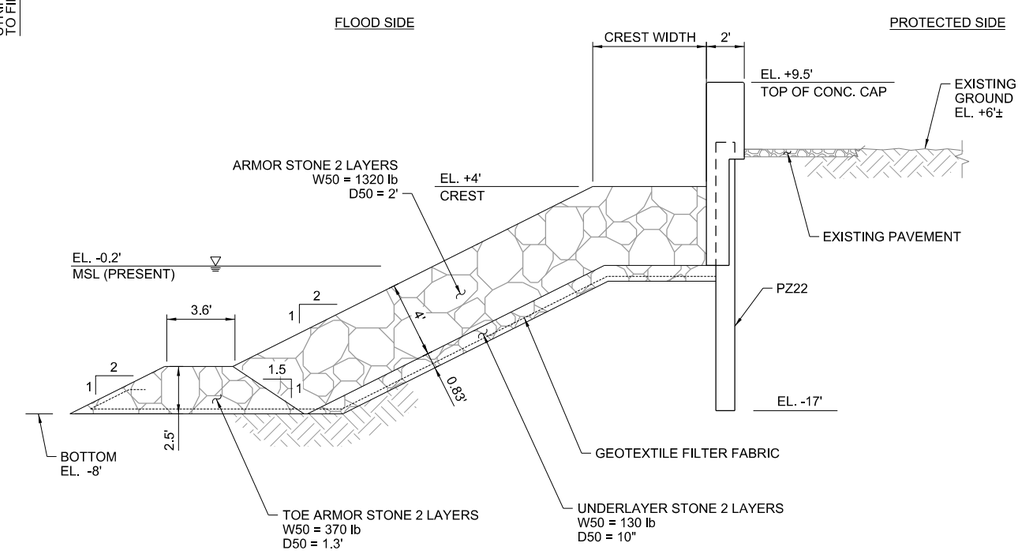

A4 REVETMENT WITH FLOODWALL
CS-104
SCALE: 1/4" = 1'-0"

PRELIMINARY
NOT FOR CONSTRUCTION

US Army Corps of Engineers®

MARK	DESCRIPTION	DATE	APPR.
E	FINAL GRR - APPENDIX A2.F	12.05.18	MK
D	DRAFT FINAL GRR - APPENDIX A2.E	11.19.18	MK
C	DRAFT FINAL GRR - APPENDIX A2.E	08.30.18	MK
B	DRAFT FINAL GRR - APPENDIX A2.E	08.20.18	MK
A	DRAFT FINAL GRR - APPENDIX A2.E	07.19.18	MK

U.S. ARMY CORPS OF ENGINEERS
U.S. ARMY ENGINEER DISTRICT
NEW YORK
http://www.nan.usace.army.mil
MOFFATT & NICHOL
529 FIFTH AVE., 14TH FLOOR
NEW YORK, NY 10017
212-768-7454

DESIGNED BY: MK
DWN BY: ME
CKD BY: MK
SUBMITTED BY: SA
PLOT SCALE: 1:2
PLOT DATE: 12/3/2018
SIZE: ANSI D
FILE NAME: W912DS_A2_CS-502.dgn
DATE: 12.05.18
SOLICITATION NO.:
CONTRACT NO.: W912-02
FILE NUMBER:

INTEGRATED HURRICANE SANDY GENERAL
RE-EVALUATION REPORT AND ENVIRONMENTAL
IMPACT STATEMENT

BERM AND
REVETMENT WITH FLOODWALL
TYPICAL SECTIONS

SHEET ID
CS-502
SHEET 12 OF 26

PATH: Q:\NY\9781-02\500_CADD_Active_HFFRRF Report-App A2\
FILE: W912DS_A2_CS-502.dgn
12/3/2018 11:40:01 AM mestimable
LAST PLOTTED BY:

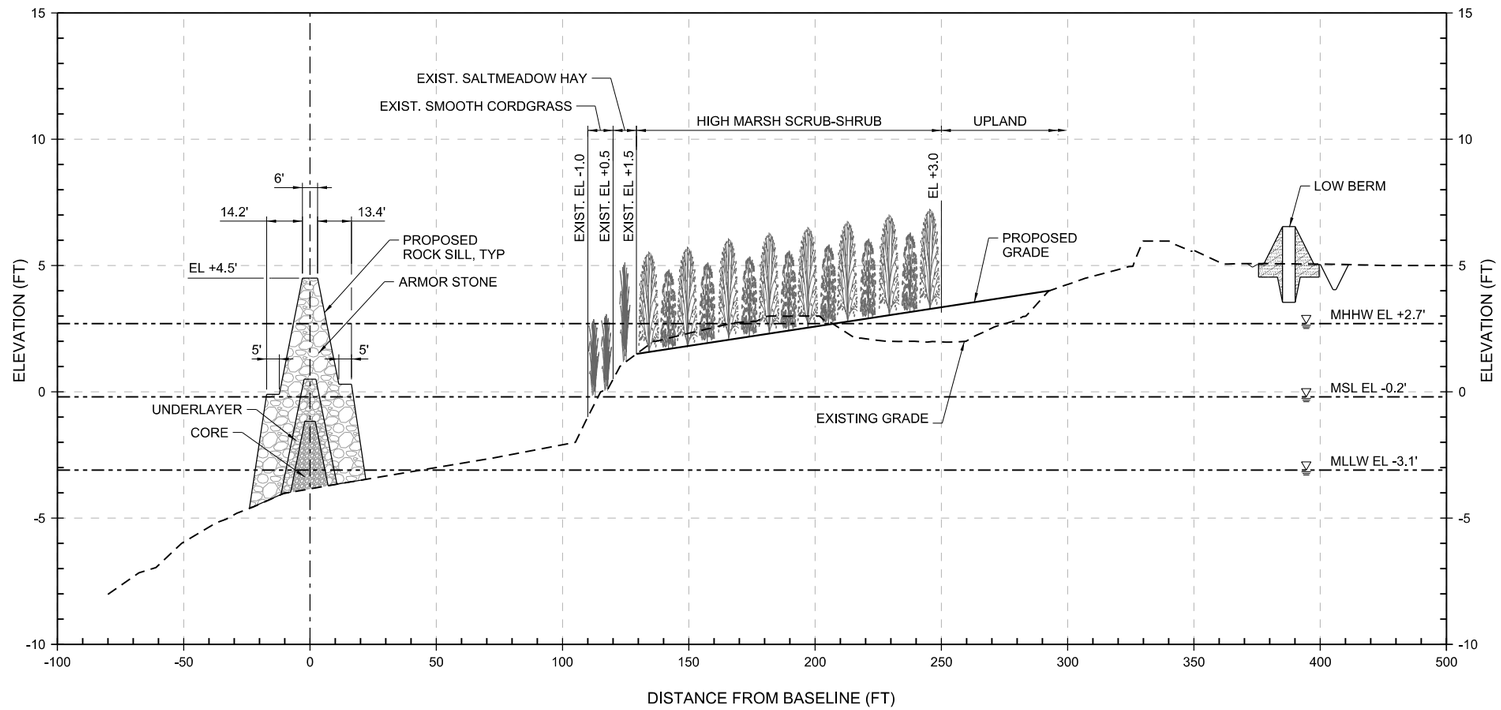

C1 / CS-103 NATURAL AND NATURE BASED FEATURES (NNBF) TYPICAL SECTION

SCALE: 1/4" = 1'-0"

NOTE

1. ALL ELEVATIONS REFERENCED TO NAVD88.

PLANTING PLAN

1. REMOVE ALL STRUCTURES AND DEBRIS.
2. REGRADE SHORELINE SLOPES TO MINIMIZE EXCAVATION AND/OR FILL ACTIVITIES AND TO PROVIDE OPTIMAL HABITAT SPECIFIC ELEVATIONS:
   A. LOW MARSH (COMMON CORDGRASS) -1.0 TO +0.5
   B. INTERMEDIATE MARSH (SALTMEADOW HAY/BLACKGRASS) +0.5 TO + 1.5
   C. HIGH MARSH – SCRUB SHRUB (MARSH ELDER/GROUNDSEL BUSH) + 1.5 TO +3.0
   D. UPLANDS HABITAT + 3.0 AND GREATER
3. SEED OR PLANT (PLUG/POT) WITH APPROPRIATE SPECIES. PLANTING OF PLUGS FOR COMMON CORDGRASS AND SALTMEADOW HAY SHOULD BE PLANTED ON 3 FT. CENTERS. MARSH ELDER/GROUNDSEL POTS SHOULD BE PLANTED ON 5 FT. CENTERS.

PRELIMINARY
NOT FOR CONSTRUCTION

0 3' 6'
HOR. SCALE: 1"=3'

0 30' 60'
HOR. SCALE: 1"=30'

US Army Corps of Engineers®

MARK	DESCRIPTION	DATE	APPR.
E	FINAL GRR - APPENDIX A2.F	12.05.18	MK
D	DRAFT FINAL GRR - APPENDIX A2.E	11.19.18	MK
C	DRAFT FINAL GRR - APPENDIX A2.E	08.30.18	MK
B	DRAFT FINAL GRR - APPENDIX A2.E	08.20.18	MK
A	DRAFT FINAL GRR - APPENDIX A2.E	07.19.18	MK

DESIGNED BY: MK
DWN BY: ME
CKD BY: MK
SUBMITTED BY: SA
PLOT SCALE: 1:2
PLOT DATE: 12/3/2018
DATE: 12.05.18
SOLICITATION NO.:
CONTRACT NO.: W912-02
FILE NUMBER:
SIZE: ANSI D
FILE NAME: W912DS_A2_CS-503.dgn

U.S. ARMY CORPS OF ENGINEERS
U.S. ARMY ENGINEER DISTRICT
NEW YORK
http://www.nan.usace.army.mil
MOFFATT & NICHOL
529 FIFTH AVE., 14TH FLOOR
NEW YORK, NY 10017
212-768-7454

INTEGRATED HURRICANE SANDY GENERAL RE-EVALUATION REPORT AND ENVIRONMENTAL IMPACT STATEMENT

NATURAL AND NATURE BASED FEATURES (NNBF) SECTION

SHEET ID
CS-503
SHEET 13 OF 26

PATH: Q:\NY\9781-02\500_CADD_Active_HFFRRF Report-App A2\
FILE: W912DS_A2_CS-503.dgn
12/3/2018 11:40:10 AM
LAST PLOTTED BY: mestimable

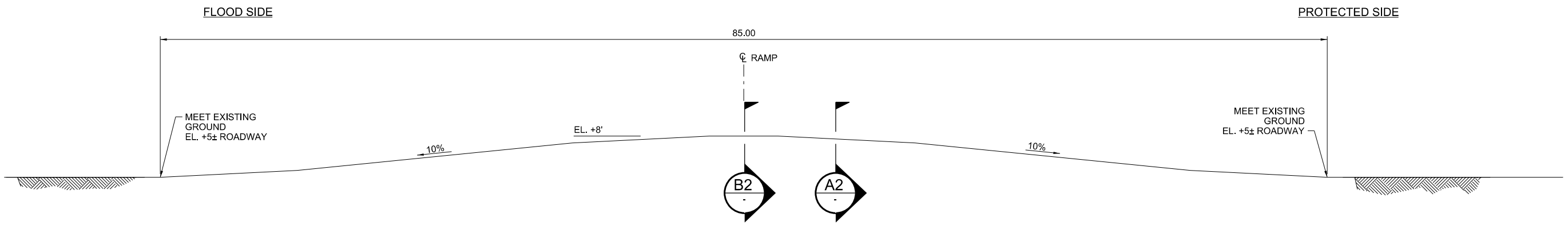

D1 SECTION - CENTER OF ROAD RAMP
SCALE: 1/4" = 1'-0"

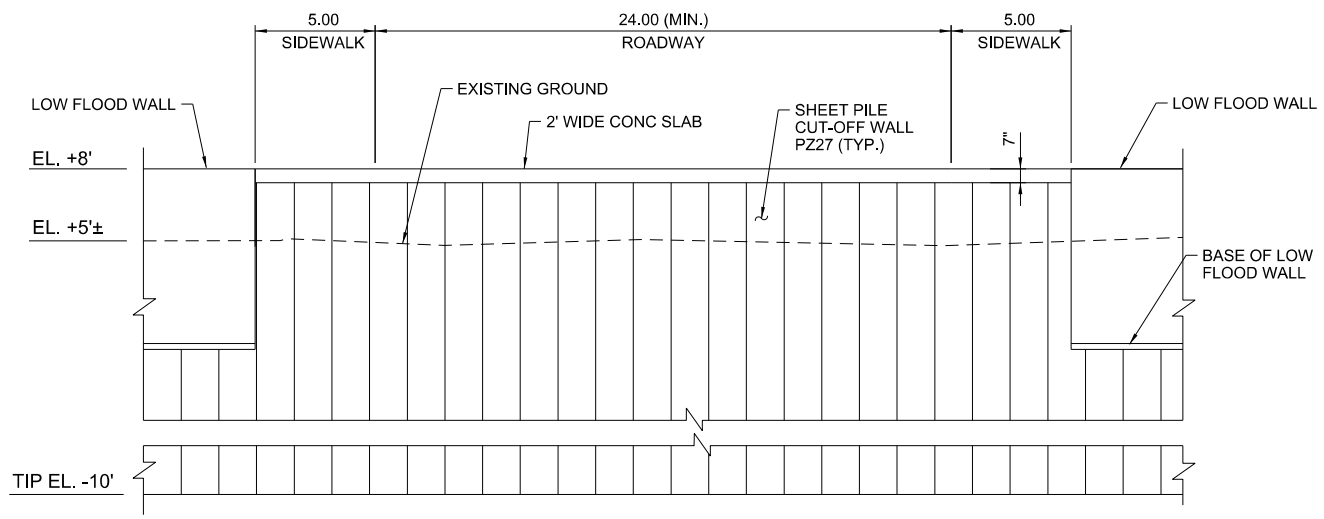

B2 SECTION - CENTER OF ROAD RAMP
SCALE: 1/4" = 1'-0"

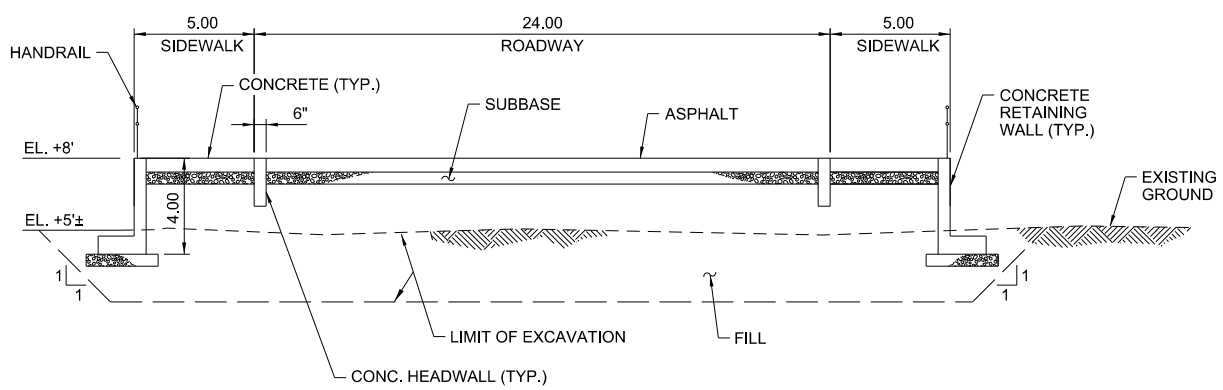

A2 SECTION - PROTECTED SIDE
SCALE: 1/4" = 1'-0"

PRELIMINARY
NOT FOR CONSTRUCTION

0 2' 4' 8'
SCALE: 1/4" = 1'-0"

US Army Corps of Engineers®

MARK	DESCRIPTION	DATE	APPR.
E	FINAL GRR - APPENDIX A2.F	12.05.18	MK
D	DRAFT FINAL GRR - APPENDIX A2.E	11.19.18	MK
C	DRAFT FINAL GRR - APPENDIX A2.E	08.30.18	MK
B	DRAFT FINAL GRR - APPENDIX A2.E	08.20.18	MK
A	DRAFT FINAL GRR - APPENDIX A2.E	07.19.18	MK

DESIGNED BY: MK
DWN BY: ME
CKD BY: MK
SUBMITTED BY: SA
PLOT SCALE: 1:32.96667
PLOT DATE: 12/7/2018
DESIGN STD: ANSI D
FILE NAME: W912DS_A2_CS-504.dgn
DATE: 12.05.18
SOLICITATION NO.:
CONTRACT NO.: W912-02
FILE NUMBER:

U.S. ARMY CORPS OF ENGINEERS
U.S. ARMY ENGINEER DISTRICT
NEW YORK
http://www.nan.usace.army.mil
MOFFATT & NICHOL
529 FIFTH AVE., 14TH FLOOR
NEW YORK, NY 10017
212-768-7454

INTEGRATED HURRICANE SANDY GENERAL RE-EVALUATION REPORT AND ENVIRONMENTAL IMPACT STATEMENT

ROAD RAMP SECTIONS

SHEET ID
CS-504
SHEET 14 OF 26

PATH: Q:\NY\9781-02\500_CADD_Active_HFFRRF Report-App A2\
FILE: W912DS_A2_CS-504.dgn
12/3/2018 11:40:20 AM
LAST PLOTTED BY: mestimable

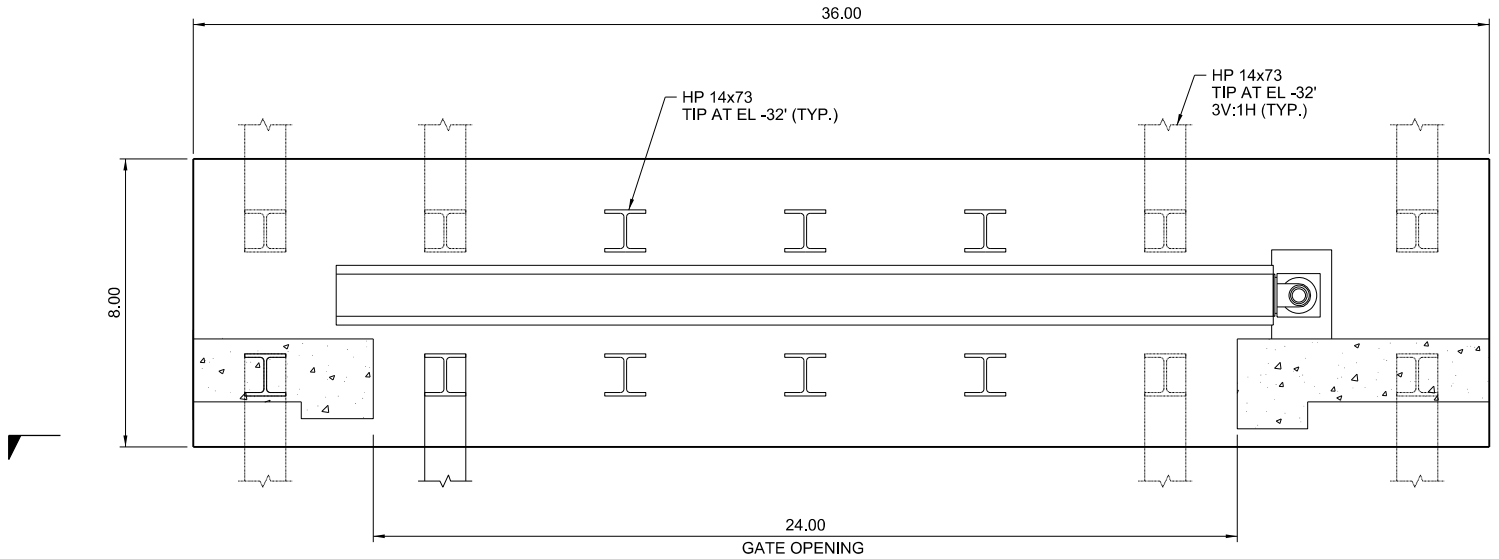

PROTECTED SIDE

C1 - PLAN - SWING GATE
SCALE: 3/8" = 1'-0"

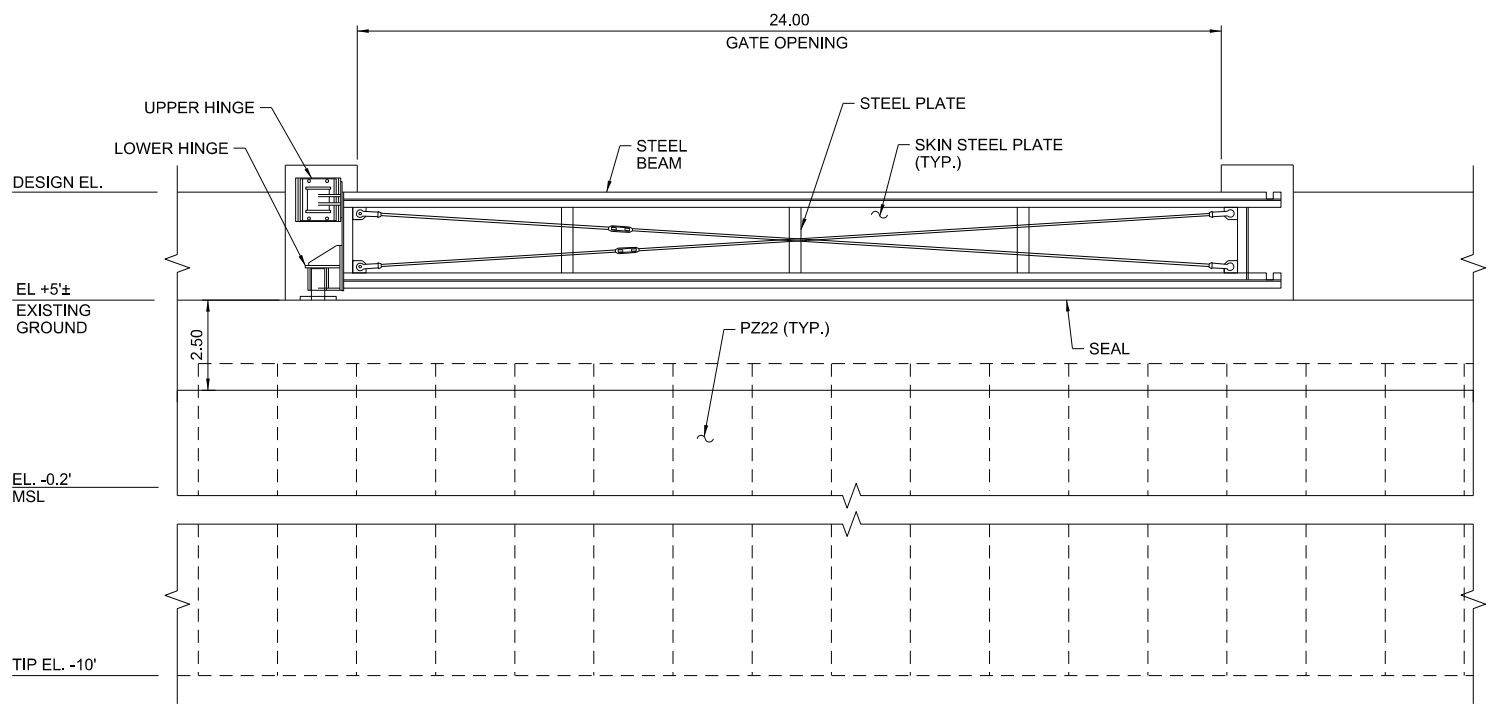

A1 - ELEVATION - SWING GATE
SCALE: 3/8" = 1'-0"

PRELIMINARY
NOT FOR CONSTRUCTION

0 2' 4' 8'
SCALE: 3/8" = 1'-0"

US Army Corps of Engineers®

MARK	DESCRIPTION	DATE	APPR.
E	FINAL GRR - APPENDIX A2.F	12.05.18	MK
D	DRAFT FINAL GRR - APPENDIX A2.E	11.19.18	MK
C	DRAFT FINAL GRR - APPENDIX A2.E	08.30.18	MK
B	DRAFT FINAL GRR - APPENDIX A2.E	08.20.18	MK
A	DRAFT FINAL GRR - APPENDIX A2.E	07.19.18	MK

U.S. ARMY CORPS OF ENGINEERS
U.S. ARMY ENGINEER DISTRICT
NEW YORK
http://www.nan.usace.army.mil

MOFFATT & NICHOL
529 FIFTH AVE., 14TH FLOOR
NEW YORK, NY 10017
212-768-7454

DESIGNED BY: IK | DATE: 12.05.18
DWN BY: ME | CKD BY: MK | SOLICITATION NO.:
SUBMITTED BY: SA | CONTRACT NO.: W91 -02
PLOT SCALE: 1:1 | PLOT DATE: 11/30/2018 | FILE NUMBER:
SIZE: ANSI D | FILE NAME: W912DS_A2_CS-505.dgn

INTEGRATED HURRICANE SANDY GENERAL RE-EVALUATION REPORT AND ENVIRONMENTAL IMPACT STATEMENT

SWING GATE PLAN AND ELEVATION

SHEET ID
CS-505
SHEET 15 OF 26

PATH: Q:\NY\9781-02\500_CADD_Active_HFFRRF Report-App A2\
LAST PLOTTED BY: mestimable 11:41:54 AM 12/3/2018 FILE: W912DS_A2_CS-505.dgn

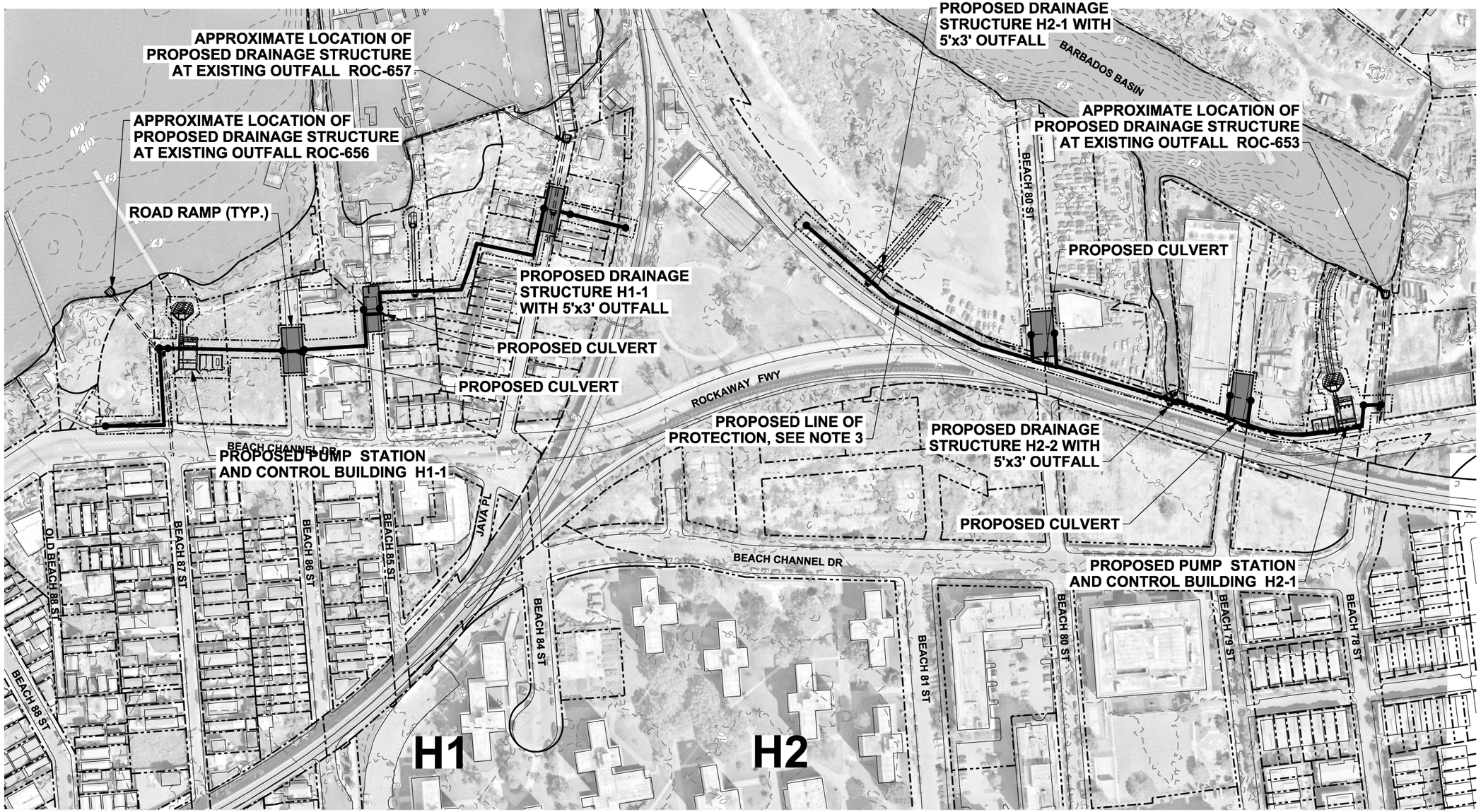

MID-ROCKAWAY - HAMMELS

SCALE: 1" = 100'

NOTES:

1. ALL ELEVATIONS REFERENCED TO NAVD88.
2. TYPICAL SECTIONS SHOWN ON SHEETS CU-501 TO CU-503.
3. LINE OF PROTECTION SHOWN ON SHEETS CS-101 TO CS-108.

LEGEND

- PROPOSED DRAINAGE AT EXISTING OUTFALL
- PROPOSED DRAINAGE AT BERM
- PROPOSED DRAINAGE AT FLOODWALL
- PROPOSED DRAINAGE AT BULKHEAD
- LIMIT OF DRAINAGE AREA
- A1 DRAINAGE AREA

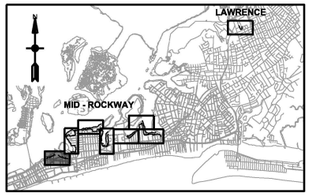

KEY PLAN

N

0 100' 200'

SCALE:1"=100'

PRELIMINARY
NOT FOR CONSTRUCTION

US Army Corps of Engineers®

MARK	DESCRIPTION	DATE	APPR.
E	FINAL GRR - APPENDIX A2-F	12.05.18	BU
D	DRAFT FINAL GRR - APPENDIX A2-E	11.19.18	BU
C	DRAFT FINAL GRR - APPENDIX A2-E	08.30.18	BU
B	DRAFT FINAL GRR - APPENDIX A1-E	08.20.18	BU
A	DRAFT FINAL GRR - APPENDIX A2-E	07.19.18	BU

U.S. ARMY CORPS OF ENGINEERS
U.S. ARMY ENGINEER DISTRICT
NEW YORK
http://www.nan.usace.army.mil
MOFFATT & NICHOL
529 FIFTH AVE., 14TH FLOOR
NEW YORK, NY 10017
212-768-7454

DESIGNED BY: BU | DATE: 12.05.18
DWN BY: OM | CKD BY: MJ | SOLICITATION NO.:
SUBMITTED BY: MC | CONTRACT NO.: W912-02
PLOT SCALE: 1:1 | PLOT DATE: 12/3/2018 | FILE NUMBER:
SIZE: ANSI D | FILE NAME: W912DS_A2_CU-101.dgn

INTEGRATED HURRICANE SANDY GENERAL RE-EVALUATION REPORT AND ENVIRONMENTAL IMPACT STATEMENT

INTERIOR DRAINAGE PLAN (1 OF 8)

SHEET ID
CU-101
SHEET 16 OF 26

PATH: Q:\NY\97781-021500_CADD_Active_HFFRRF Report-App A2\Aecom dwgs\
FILE: W912DS_A2_CU-101.dgn
12/3/2018 11:23:59 AM mestimable
LAST PLOTTED BY:

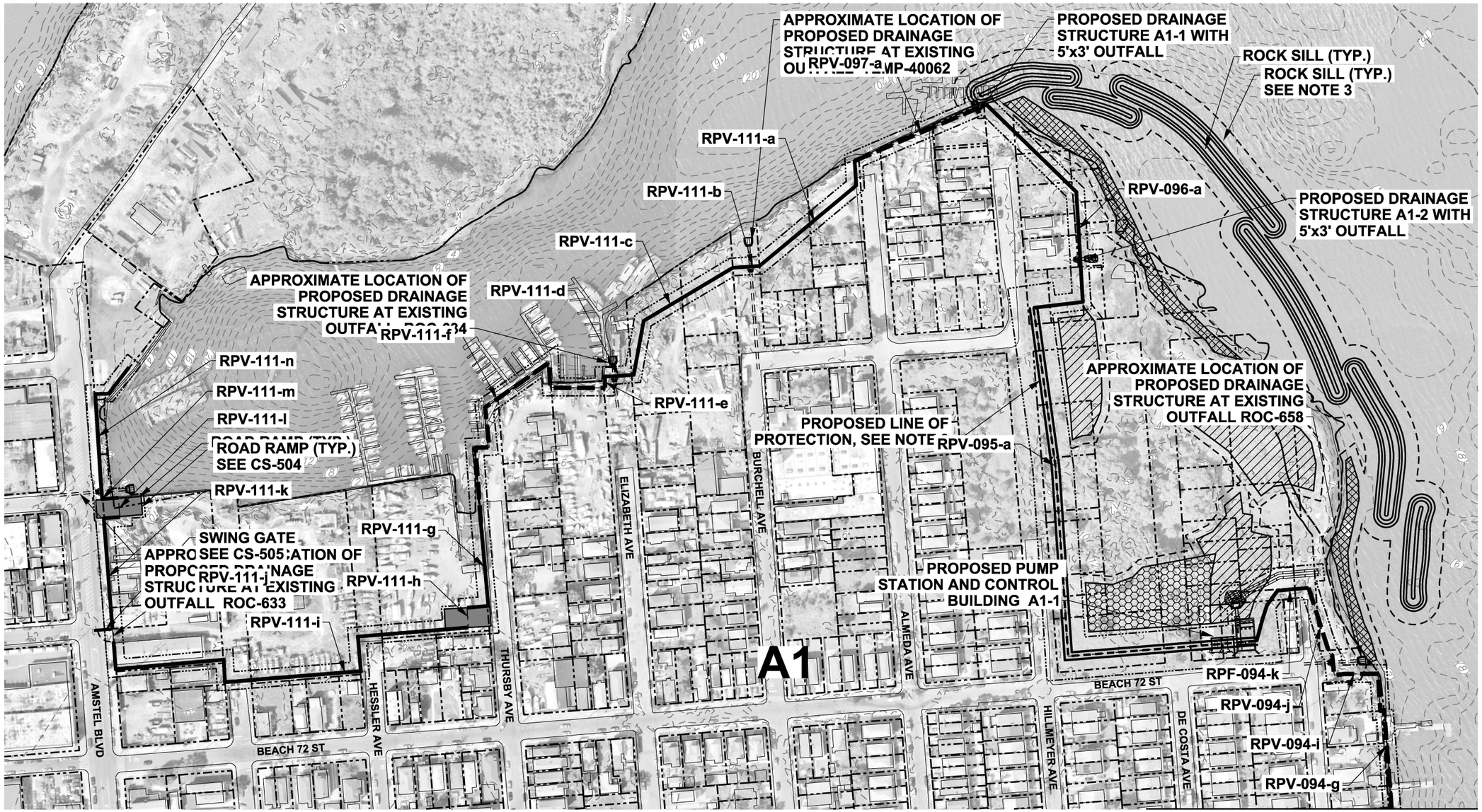

MATCH LINE - SEE SHEET CU-103

MID-ROCKAWAY - ARVERNE (SHEET 1)

SCALE: 1" = 100'

NOTES:

1. ALL ELEVATIONS REFERENCED TO NAVD88.
2. TYPICAL SECTIONS SHOWN ON SHEETS CU-501 TO CU-503.
3. LINE OF PROTECTION SHOWN ON SHEETS CS-101 TO CS-108.

LEGEND

- PROPOSED DRAINAGE AT EXISTING OUTFALL
- PROPOSED DRAINAGE AT BERM
- PROPOSED DRAINAGE AT FLOODWALL
- PROPOSED DRAINAGE AT BULKHEAD
- LIMIT OF DRAINAGE AREA
- A1 DRAINAGE AREA

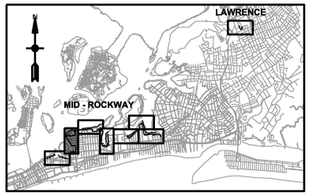

KEY PLAN

0 100' 200'

SCALE:1"=100'

PRELIMINARY
NOT FOR CONSTRUCTION

US Army Corps of Engineers®

MARK	DESCRIPTION	DATE	APPR.
E	FINAL GRR - APPENDIX A2-F	12.05.18	BU
D	DRAFT FINAL GRR - APPENDIX A2-E	11.19.18	BU
C	DRAFT FINAL GRR - APPENDIX A2-E	08.30.18	BU
B	DRAFT FINAL GRR - APPENDIX A1-E	08.20.18	BU
A	DRAFT FINAL GRR - APPENDIX A2-E	07.19.18	BU

U.S. ARMY CORPS OF ENGINEERS
U.S. ARMY ENGINEER DISTRICT
NEW YORK
http://www.nan.usace.army.mil
MOFFATT & NICHOL
529 FIFTH AVE., 14TH FLOOR
NEW YORK, NY 10017
212-768-7454

DESIGNED BY: BU | DATE: 12.05.18
DWN BY: CM | CKD BY: MJ | SOLICITATION NO.:
SUBMITTED BY: IAC | CONTRACT NO.: 9781-02
PLOT SCALE: 1:0.1666667 | PLOT DATE: 12/3/2018 | FILE NUMBER:
ANSI D | FILE NAME: W912DS_A2_CU-102.dgn

INTEGRATED HURRICANE SANDY GENERAL RE-EVALUATION REPORT AND ENVIRONMENTAL IMPACT STATEMENT

INTERIOR DRAINAGE PLAN (2 OF 8)

SHEET ID
CU-102
SHEET 17 OF 26

PATH: Q:\NY\9781-02\500_CADD_Active_HFFRRF Report-App A2\Aecom dwgs\
FILE: W912DS_A2_CU-102.dgn
12/3/2018 11:25:32 AM
LAST PLOTTED BY: mestimable

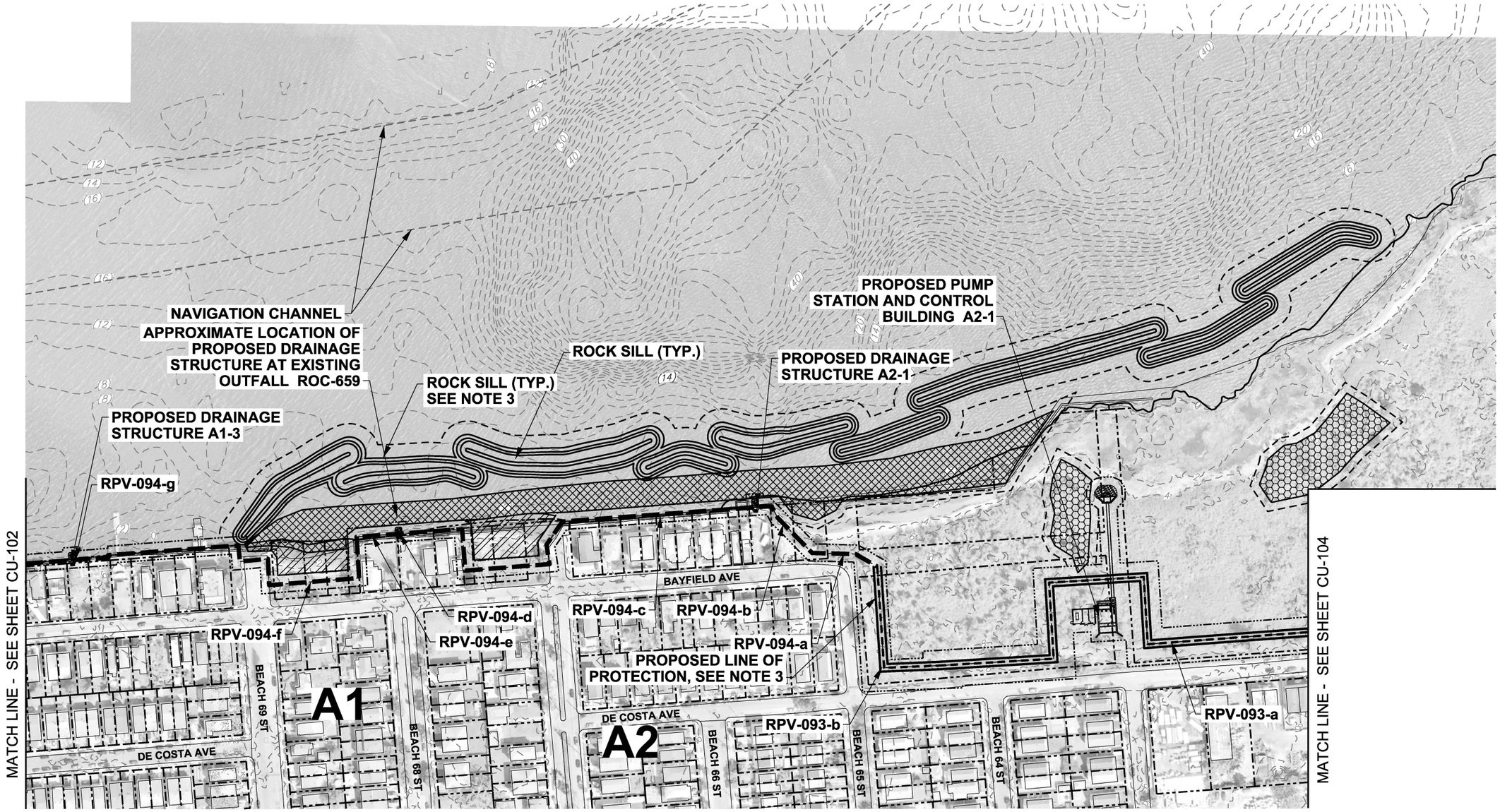

MID-ROCKAWAY - ARVERNE (SHEET 2)

SCALE: 1" = 100'

NOTES:

1. ALL ELEVATIONS REFERENCED TO NAVD88.
2. TYPICAL SECTIONS SHOWN ON SHEETS CU-501 TO CU-503.
3. LINE OF PROTECTION SHOWN ON SHEETS CS-101 TO CS-108.

LEGEND

- PROPOSED DRAINAGE AT EXISTING OUTFALL
- PROPOSED DRAINAGE AT BERM
- PROPOSED DRAINAGE AT FLOODWALL
- PROPOSED DRAINAGE AT BULKHEAD
- LIMIT OF DRAINAGE AREA
- A1 DRAINAGE AREA

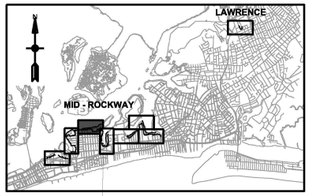

KEY PLAN

N

0 100' 200'

SCALE:1"=100'

PRELIMINARY
NOT FOR CONSTRUCTION

US Army Corps of Engineers®

MARK	DESCRIPTION	DATE	APPR.
E	FINAL GRR - APPENDIX A2-F	12.05.18	BU
D	DRAFT FINAL GRR - APPENDIX A2-E	11.19.18	BU
C	DRAFT FINAL GRR - APPENDIX A2-E	08.30.18	BU
B	DRAFT FINAL GRR - APPENDIX A1-E	08.20.18	BU
A	DRAFT FINAL GRR - APPENDIX A2-E	07.19.18	BU

U.S. ARMY CORPS OF ENGINEERS
U.S. ARMY ENGINEER DISTRICT
NEW YORK
http://www.nan.usace.army.mil
MOFFATT & NICHOL
529 FIFTH AVE., 14TH FLOOR
NEW YORK, NY 10017
212-768-7454

DESIGNED BY: BU	DATE: 12.05.18
DWN BY: CM	CKD BY: MJ
SOLICITATION NO.:	
SUBMITTED BY: MC	CONTRACT NO.: W912-02
PLOT SCALE: 1:1	PLOT DATE: 12/3/2018
FILE NUMBER:	
SIZE: ANSI D	FILE NAME: W912DS_A2_CU-103.dgn

INTEGRATED HURRICANE SANDY GENERAL RE-EVALUATION REPORT AND ENVIRONMENTAL IMPACT STATEMENT

INTERIOR DRAINAGE PLAN (3 OF 8)

SHEET ID
CU-103
SHEET 18 OF 26

PATH: Q:\NY\9781-02\500_CADD_Active_HFFRRF Report-App A2\Aecom dwgs\
FILE: W912DS_A2_CU-103.dgn
12/3/2018 11:25:54 AM mestimable
LAST PLOTTED BY:

MATCH LINE - SEE SHEET CU-103

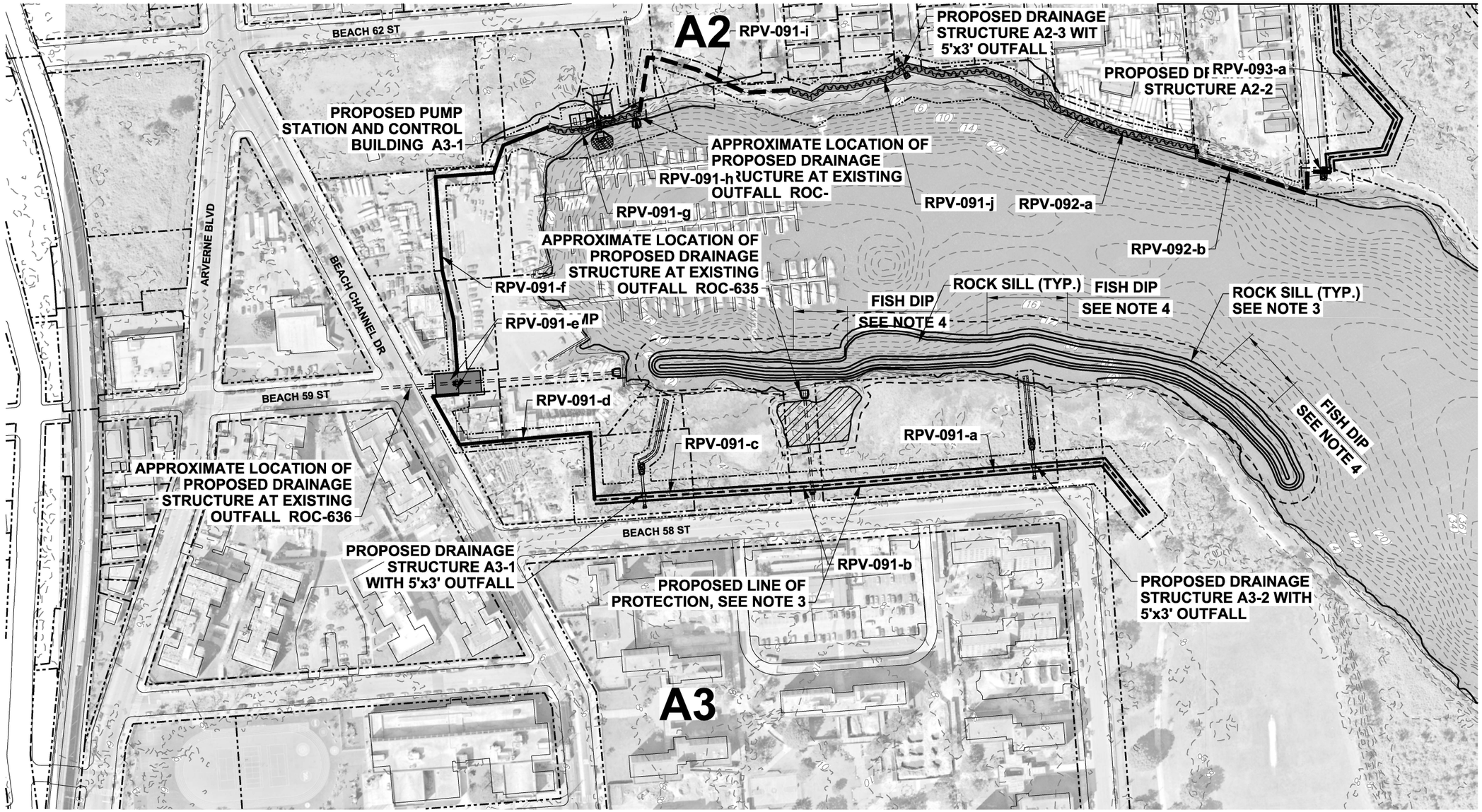

MID-ROCKAWAY - ARVERNE (SHEET 3)

SCALE: 1" = 100'

NOTES:

1. ALL ELEVATIONS REFERENCED TO NAVD88.
2. TYPICAL SECTIONS SHOWN ON SHEETS CU-501 TO CU-503.
3. LINE OF PROTECTION SHOWN ON SHEETS CS-101 TO CS-108.

LEGEND

- PROPOSED DRAINAGE AT EXISTING OUTFALL
- PROPOSED DRAINAGE AT BERM
- PROPOSED DRAINAGE AT FLOODWALL
- PROPOSED DRAINAGE AT BULKHEAD
- LIMIT OF DRAINAGE AREA
- A1 DRAINAGE AREA

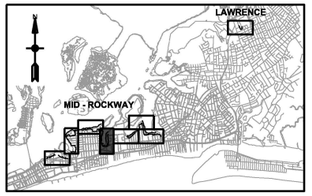

KEY PLAN

0 100' 200'

SCALE:1"=100'

PRELIMINARY
NOT FOR CONSTRUCTION

US Army Corps of Engineers®

MARK	DESCRIPTION	DATE	APPR.
E	FINAL GRR - APPENDIX A2-F	12.05.18	BU
D	DRAFT FINAL GRR - APPENDIX A2-E	11.19.18	BU
C	DRAFT FINAL GRR - APPENDIX A2-E	08.30.18	BU
B	DRAFT FINAL GRR - APPENDIX A1-E	08.20.18	BU
A	DRAFT FINAL GRR - APPENDIX A2-E	07.19.18	BU

U.S. ARMY CORPS OF ENGINEERS
U.S. ARMY ENGINEER DISTRICT
NEW YORK
http://www.nan.usace.army.mil
MOFFATT & NICHOL
529 FIFTH AVE., 14TH FLOOR
NEW YORK, NY 10017
212-768-7454

DESIGNED BY: BU | DATE: 12.05.18
DWN BY: CM | CKD BY: MJ | SOLICITATION NO.:
SUBMITTED BY: MC | CONTRACT NO.: W912-02
PLOT SCALE: 1:1000000 | PLOT DATE: 11/19/2018 | FILE NUMBER:
SIZE: ANSI D | FILE NAME: W912DS_A2_CU-104.dgn

INTEGRATED HURRICANE SANDY GENERAL RE-EVALUATION REPORT AND ENVIRONMENTAL IMPACT STATEMENT

INTERIOR DRAINAGE PLAN (4 OF 8)

SHEET ID
CU-104
SHEET 19 OF 26

PATH: Q:\NY\97781-02\500_CADD_Active_HFFRRF Report-App A2\Aecom dwgs\
FILE: W912DS_A2_CU-104.dgn
LAST PLOTTED BY: mestimable 12/3/2018 11:26:16 AM

MATCH LINE - SEE SHEET CU-106

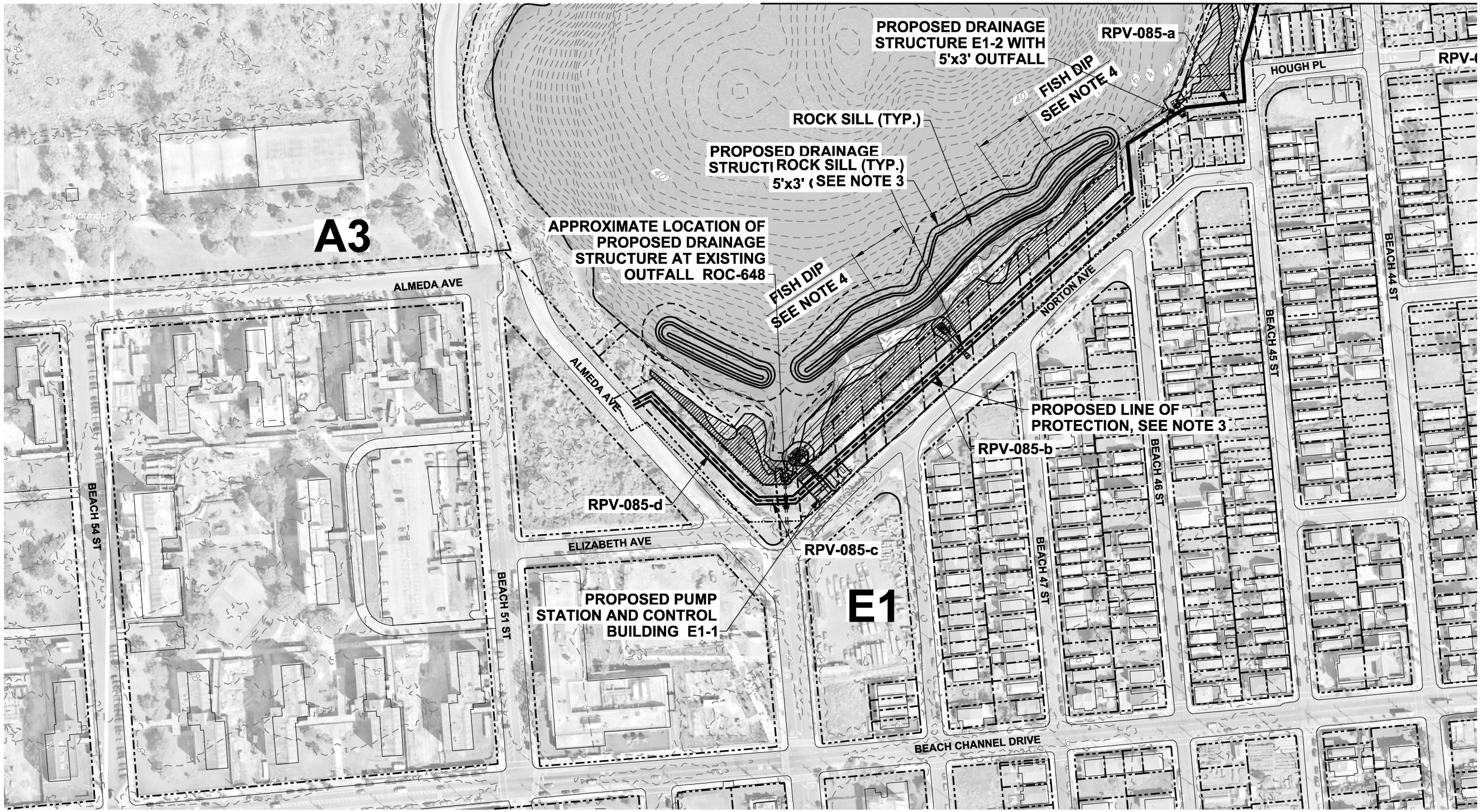

MID-ROCKAWAY - EDGEMERE (SHEET 1)

SCALE: 1" = 100'

NOTES:

1. ALL ELEVATIONS REFERENCED TO NAVD88.
2. TYPICAL SECTIONS SHOWN ON SHEETS CU-501 TO CU-503.
3. LINE OF PROTECTION SHOWN ON SHEETS CS-101 TO CS-108.

LEGEND

- PROPOSED DRAINAGE AT EXISTING OUTFALL
- PROPOSED DRAINAGE AT BERM
- PROPOSED DRAINAGE AT FLOODWALL
- PROPOSED DRAINAGE AT BULKHEAD
- LIMIT OF DRAINAGE AREA
- A1 DRAINAGE AREA

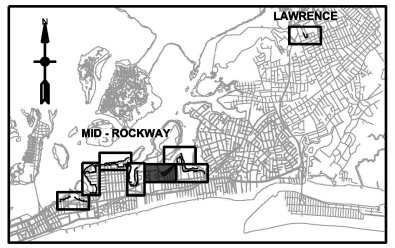

KEY PLAN

N

0 100' 200'

SCALE:1"=100'

PRELIMINARY
NOT FOR CONSTRUCTION

US Army Corps of Engineers®

MARK	DESCRIPTION	DATE	APPR.
E	FINAL GRR - APPENDIX A2-F	12.05.18	BU
D	DRAFT FINAL GRR - APPENDIX A2-E	11.19.18	BU
C	DRAFT FINAL GRR - APPENDIX A2-E	08.30.18	BU
B	DRAFT FINAL GRR - APPENDIX A1-E	08.20.18	BU
A	DRAFT FINAL GRR - APPENDIX A2-E	07.19.18	BU

DESIGNED BY: BU | DATE: 12.05.18
DWN BY: CM | CKD BY: MJ | SOLICITATION NO.:
SUBMITTED BY: MC | CONTRACT NO.: W912-02
PLOT SCALE: 1:100000 | PLOT DATE: 12/3/2018 | FILE NUMBER:
SIZE: ANSI D | FILE NAME: W912DS_A2_CU-105.dgn

U.S. ARMY CORPS OF ENGINEERS
U.S. ARMY ENGINEER DISTRICT
NEW YORK
http://www.nan.usace.army.mil
MOFFATT & NICHOL
529 FIFTH AVE., 14TH FLOOR
NEW YORK, NY 10017
212-768-7454

INTEGRATED HURRICANE SANDY GENERAL RE-EVALUATION REPORT AND ENVIRONMENTAL IMPACT STATEMENT

INTERIOR DRAINAGE PLAN (5 OF 8)

SHEET ID
CU-105
SHEET 20 OF 26

PATH: Q:\NY\9781-02\500_CADD_Active_HFFRRF Report-App A2\Aecom dwgs\
FILE: W912DS_A2_CU-105.dgn
12/3/2018 11:26:38 AM
LAST PLOTTED BY: mestimable

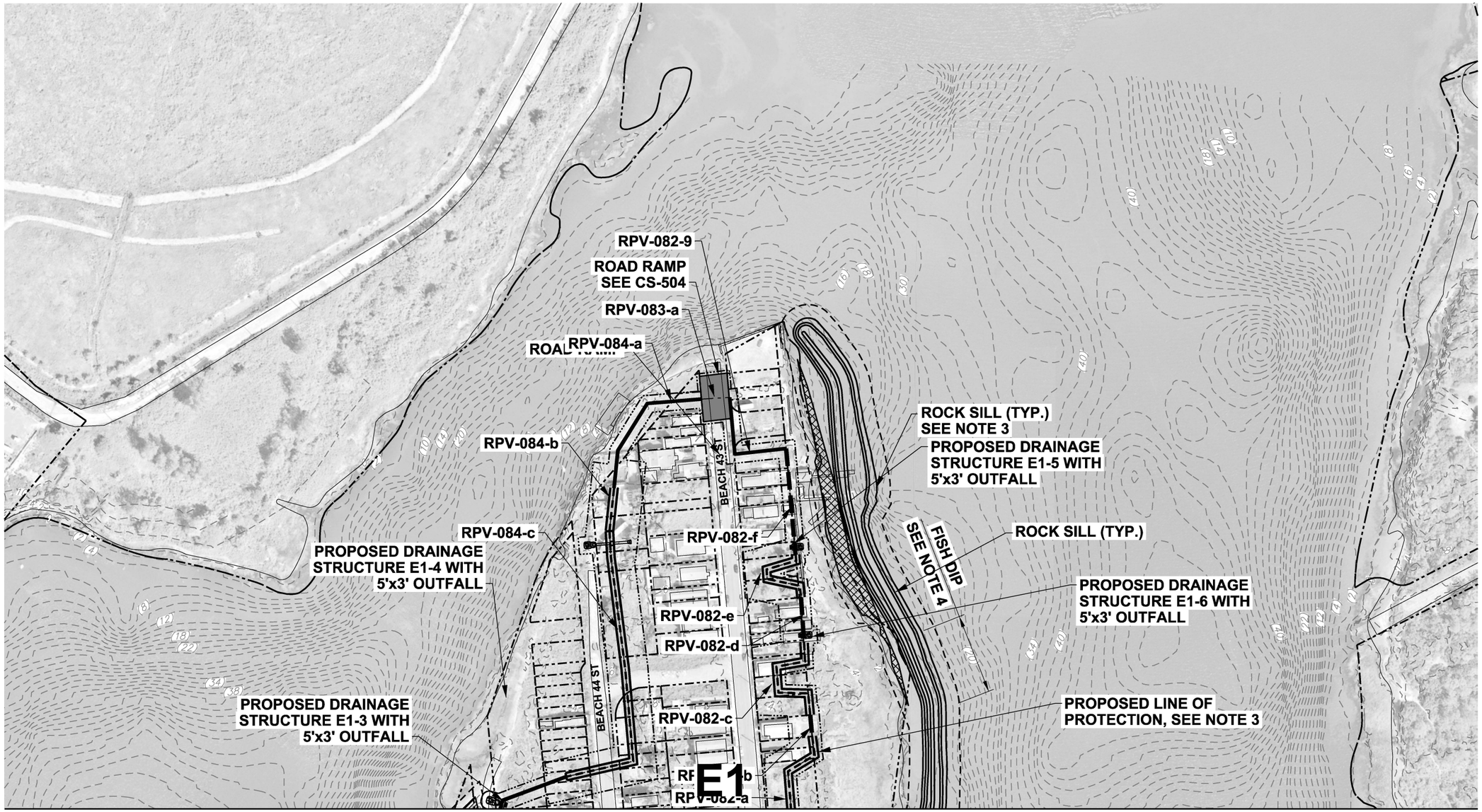

MATCH LINE - SEE SHEET CU-105

MATCH LINE - SEE SHEET CU-107

MID-ROCKAWAY - EDGEMERE (SHEET 2)

SCALE: 1" = 100'

NOTES:

1. ALL ELEVATIONS REFERENCED TO NAVD88.
2. TYPICAL SECTIONS SHOWN ON SHEETS CU-501 TO CU-503.
3. LINE OF PROTECTION SHOWN ON SHEETS CS-101 TO CS-108.

LEGEND

- PROPOSED DRAINAGE AT EXISTING OUTFALL
- PROPOSED DRAINAGE AT BERM
- PROPOSED DRAINAGE AT FLOODWALL
- PROPOSED DRAINAGE AT BULKHEAD
- LIMIT OF DRAINAGE AREA
- A1 DRAINAGE AREA

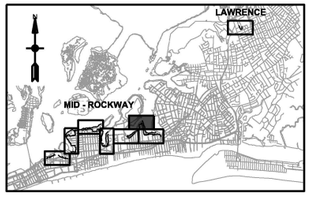

KEY PLAN

N

0 100' 200'

SCALE:1"=100'

PRELIMINARY
NOT FOR CONSTRUCTION

US Army Corps of Engineers®

MARK	DESCRIPTION	DATE	APPR.
E	FINAL GRR - APPENDIX A2:F	12.05.18	BU
D	DRAFT FINAL GRR - APPENDIX A2:E	11.19.18	BU
C	DRAFT FINAL GRR - APPENDIX A2:E	08.30.18	BU
B	DRAFT FINAL GRR - APPENDIX A1:E	08.20.18	BU
A	DRAFT FINAL GRR - APPENDIX A2:E	07.19.18	BU

U.S. ARMY CORPS OF ENGINEERS
U.S. ARMY ENGINEER DISTRICT
NEW YORK
http://www.nan.usace.army.mil
MOFFATT & NICHOL
529 FIFTH AVE., 14TH FLOOR
NEW YORK, NY 10017
212-768-7454

DESIGNED BY: BU | DATE: 12.05.18
DWN BY: CM | CKD BY: MJ | SOLICITATION NO.:
SUBMITTED BY: MC | CONTRACT NO.: W81-02
PLOT SCALE: 1:0.166667 | PLOT DATE: 12/3/2018 | FILE NUMBER:
ANSI D | FILE NAME: W912DS_A2_CU-106.dgn

INTEGRATED HURRICANE SANDY GENERAL RE-EVALUATION REPORT AND ENVIRONMENTAL IMPACT STATEMENT

INTERIOR DRAINAGE PLAN (6 OF 8)

SHEET ID
CU-106
SHEET 21 OF 26

PATH: Q:\NY\9781-02\500_CADD_Active_HFFRRF Report-App A2\Aecom dwgs\
FILE: W912DS_A2_CU-106.dgn
12/3/2018 11:26:58 AM
LAST PLOTTED BY: mestimable

MATCH LINE - SEE SHEET CU-106

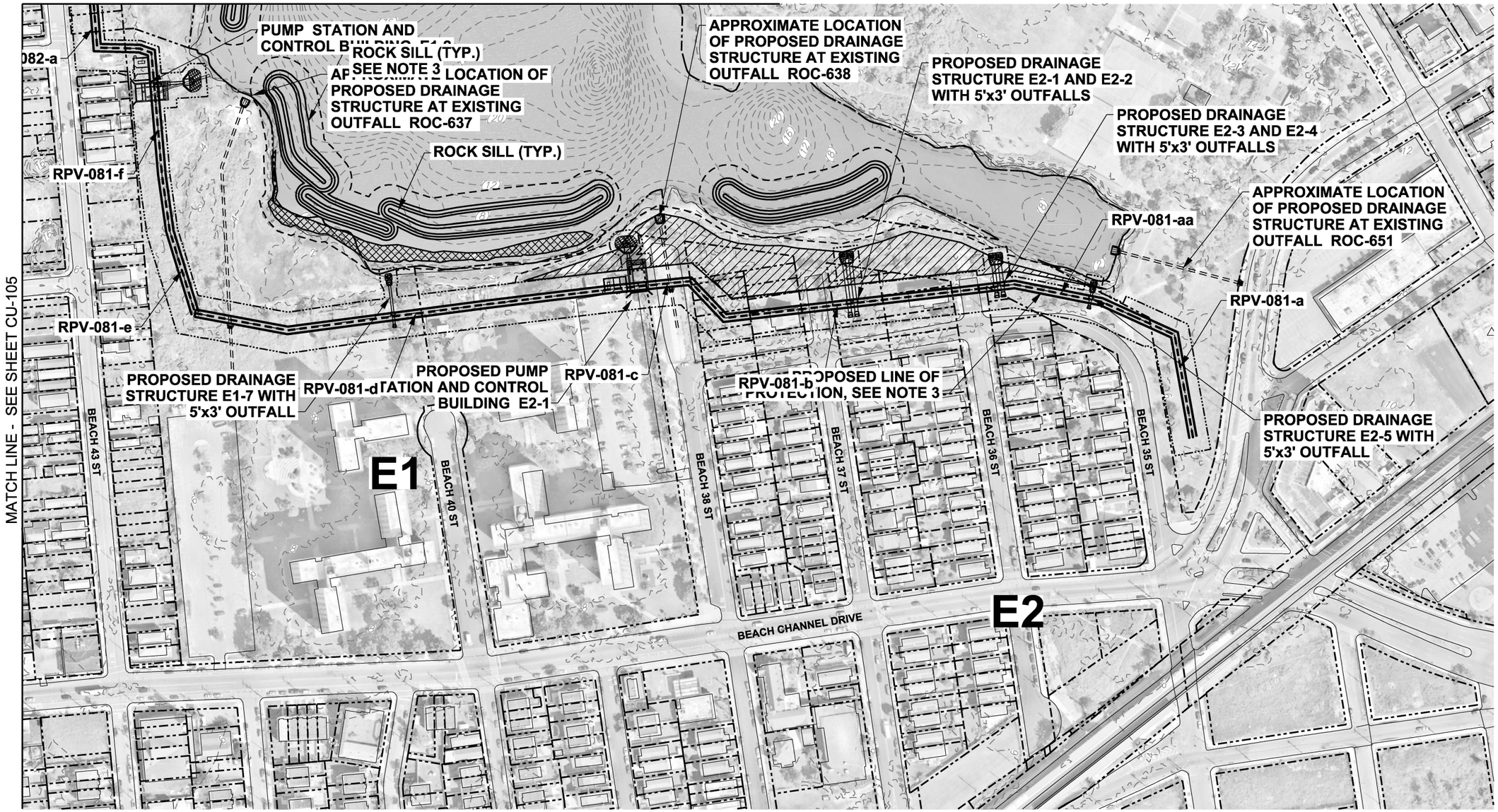

MID-ROCKAWAY - EDGEMERE (SHEET 3)

SCALE: 1" = 100'

NOTES:

1. ALL ELEVATIONS REFERENCED TO NAVD88.
2. TYPICAL SECTIONS SHOWN ON SHEETS CU-501 TO CU-503.
3. LINE OF PROTECTION SHOWN ON SHEETS CS-101 TO CS-108.

LEGEND

- PROPOSED DRAINAGE AT EXISTING OUTFALL
- PROPOSED DRAINAGE AT BERM
- PROPOSED DRAINAGE AT FLOODWALL
- PROPOSED DRAINAGE AT BULKHEAD
- LIMIT OF DRAINAGE AREA
- A1 DRAINAGE AREA

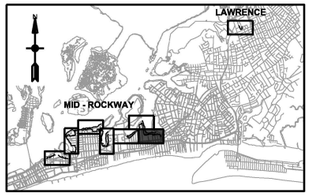

KEY PLAN

N

0 100' 200'

SCALE:1"=100'

PRELIMINARY
NOT FOR CONSTRUCTION

US Army Corps of Engineers®

MARK	DESCRIPTION	DATE	APPR.
E	FINAL GRR - APPENDIX A2-F	12.05.18	BU
D	DRAFT FINAL GRR - APPENDIX A2-E	11.19.18	BU
C	DRAFT FINAL GRR - APPENDIX A2-E	08.30.18	BU
B	DRAFT FINAL GRR - APPENDIX A1-E	08.20.18	BU
A	DRAFT FINAL GRR - APPENDIX A2-E	07.19.18	BU

U.S. ARMY CORPS OF ENGINEERS
U.S. ARMY ENGINEER DISTRICT
NEW YORK
http://www.nan.usace.army.mil

MOFFATT & NICHOL
529 FIFTH AVE., 14TH FLOOR
NEW YORK, NY 10017
212-768-7454

DESIGNED BY: BU
DWN BY: OM
CKD BY: MJ
SUBMITTED BY: MC
PLOT SCALE: 1:1000
SIZE: ANSI D
PLOT DATE: 12/05/2018
FILE NAME: W912DS_A2_CU-107.dgn
DATE: 12.05.18
SOLICITATION NO.:
CONTRACT NO.: W781-J2
FILE NUMBER:

INTEGRATED HURRICANE SANDY GENERAL RE-EVALUATION REPORT AND ENVIRONMENTAL IMPACT STATEMENT

INTERIOR DRAINAGE PLAN (7 OF 8)

SHEET ID
CU-107
SHEET 22 OF 26

PATH: Q:\NY\97781-02\500_CADD_Active_HFFRRF Report-App A2\Aecom dwgs\
FILE: W912DS_A2_CU-107.dgn
12/3/2018 11:27:20 AM
LAST PLOTTED BY: mestimable

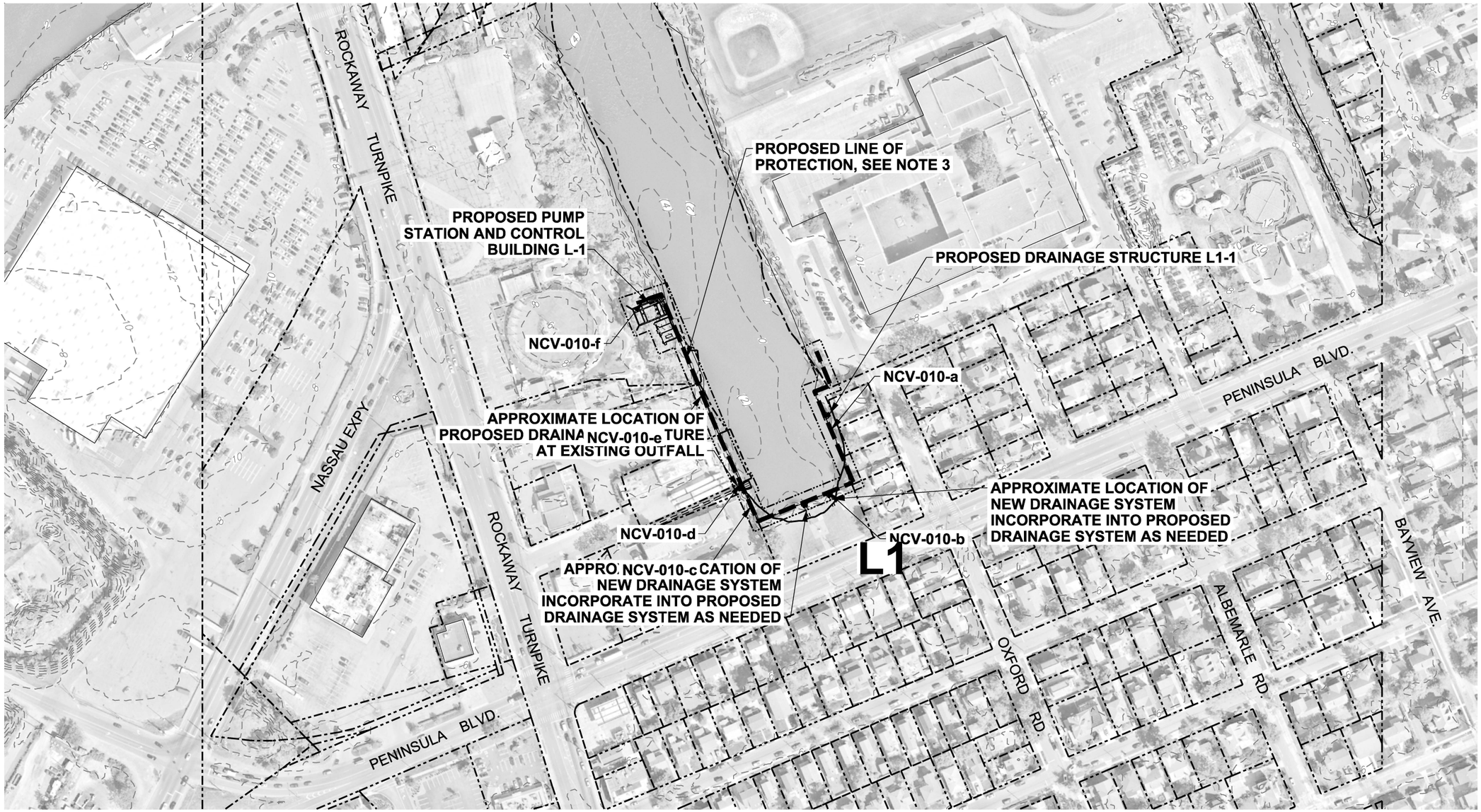

LAWRENCE
SCALE: 1" = 100'

NOTES:

1. ALL ELEVATIONS REFERENCED TO NAVD88.
2. TYPICAL SECTIONS SHOWN ON SHEETS CU-501 TO CU-503.
3. LINE OF PROTECTION SHOWN ON SHEETS CS-101 TO CS-108.

LEGEND

- PROPOSED DRAINAGE AT EXISTING OUTFALL
- PROPOSED DRAINAGE AT BERM
- PROPOSED DRAINAGE AT FLOODWALL
- PROPOSED DRAINAGE AT BULKHEAD
- LIMIT OF DRAINAGE AREA
- A1 DRAINAGE AREA

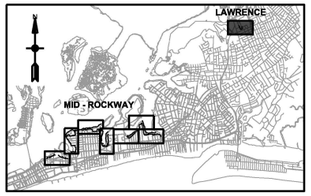

KEY PLAN

N

0 100' 200'

SCALE:1"=100'

PRELIMINARY
NOT FOR CONSTRUCTION

US Army Corps of Engineers®

MARK	DESCRIPTION	DATE	APPR.
E	FINAL GRR - APPENDIX A2-F	12.05.18	BU
D	DRAFT FINAL GRR - APPENDIX A2-E	11.19.18	BU
C	DRAFT FINAL GRR - APPENDIX A2-E	08.30.18	BU
B	DRAFT FINAL GRR - APPENDIX A1-E	08.20.18	BU
A	DRAFT FINAL GRR - APPENDIX A2-E	07.19.18	BU

U.S. ARMY CORPS OF ENGINEERS
U.S. ARMY ENGINEER DISTRICT
NEW YORK
http://www.nan.usace.army.mil
MOFFATT & NICHOL
529 FIFTH AVE., 14TH FLOOR
NEW YORK, NY 10017
212-768-7454

DESIGNED BY: BU | DATE: 12.05.18
DWN BY: CM | CKD BY: MJ | SOLICITATION NO.:
SUBMITTED BY: MC | CONTRACT NO.: W912-02
PLOT SCALE: 1:1000000 | PLOT DATE: 12/3/2018 | FILE NUMBER:
SIZE: ANSI D | FILE NAME: W912DS_A2_CU-108.dgn

INTEGRATED HURRICANE SANDY GENERAL RE-EVALUATION REPORT AND ENVIRONMENTAL IMPACT STATEMENT

INTERIOR DRAINAGE PLAN (8 OF 8)

SHEET ID
CU-108
SHEET 23 OF 26

PATH: Q:\NY\9781-02\500_CADD_Active_HFFRRF Report-App A2\Aecom dwgs\
FILE: W912DS_A2_CU-108.dgn
LAST PLOTTED BY: mestimable 11:27:44 AM 12/3/2018

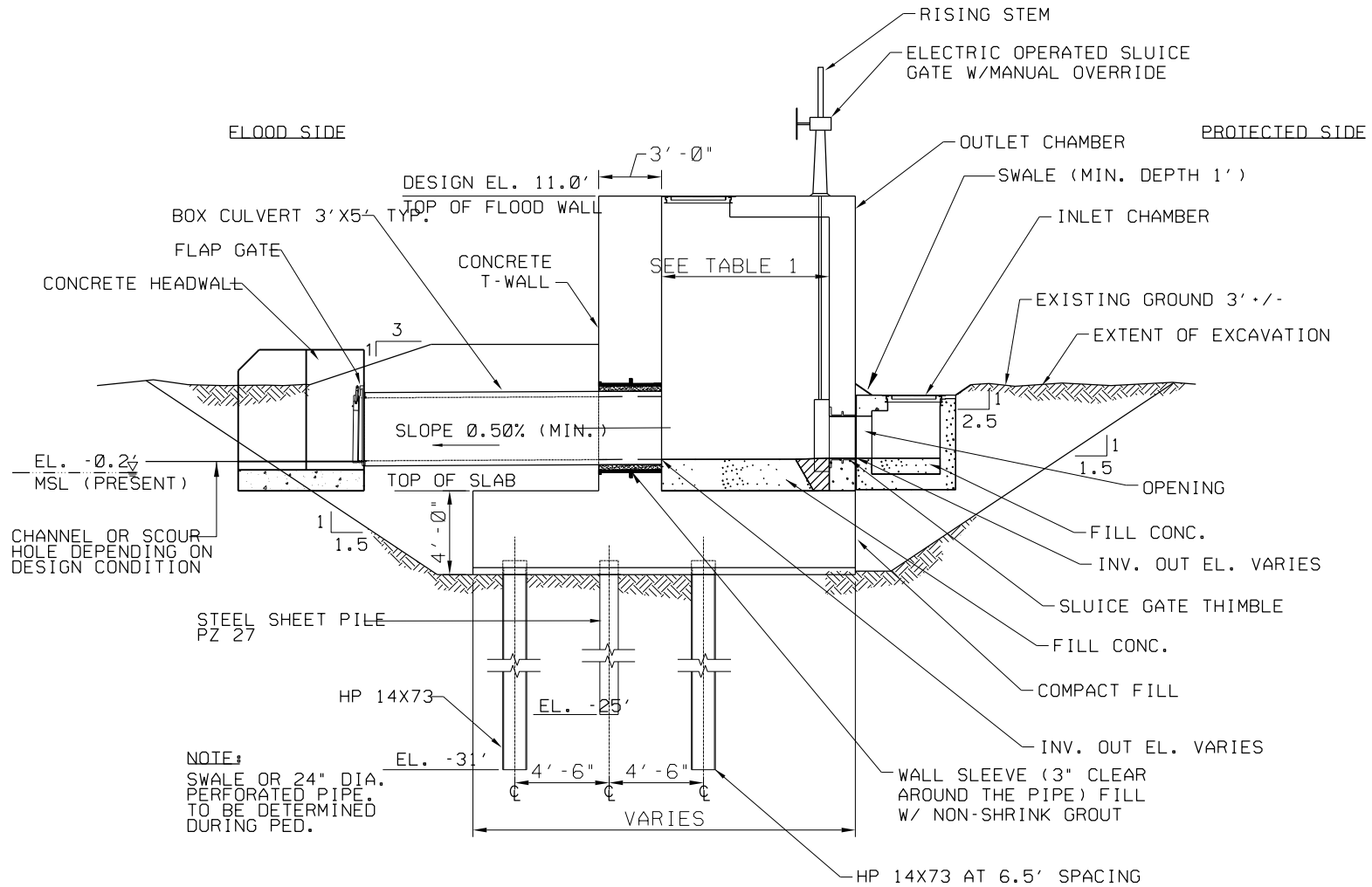

1 TYPICAL OUTFALL DETAIL THROUGH FLOODWALL
SCALE: 1/4" = 1'-0"

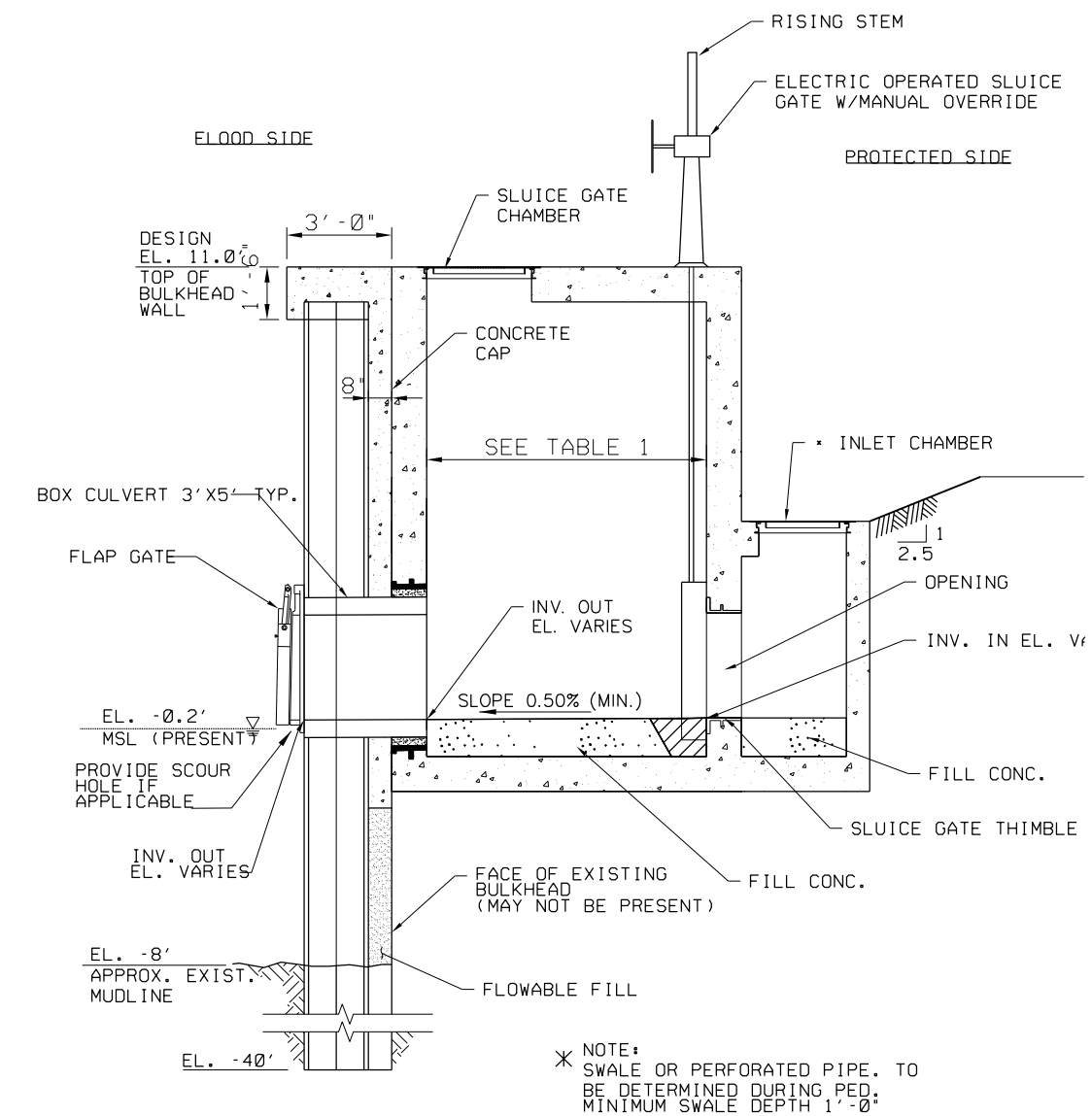

2 TYPICAL OUTFALL DETAIL THROUGH BULKHEAD
SCALE: 3/8" = 1'-0"

DRAINAGE STRUCTURE DIMENSION					
CULVERT SIZE	WALL THICKNESS (FT)	ROOF THICKNESS (FT)	FLOOR SLAB THICKNESS (FT)	CHAMBER WIDTH	CHAMBER LENGTH
5'X3'	1.5	1.0	1.5	8'-0"	8'-0"

0 2' 4' 8'
SCALE: 1/4" = 1'-0"

0 2' 4' 8'
SCALE: 3/8" = 1'-0"

PRELIMINARY
NOT FOR CONSTRUCTION

US Army Corps of Engineers®

MARK	DESCRIPTION	DATE	APPR.
E	FINAL GRR - APPENDIX A2.F	12.05.18	BU
D	DRAFT FINAL GRR - APPENDIX A2.E	11.19.18	BU
C	DRAFT FINAL GRR - APPENDIX A2.E	08.30.18	BU
B	DRAFT FINAL GRR - APPENDIX A1.E	08.20.18	BU
A	DRAFT FINAL GRR - APPENDIX A2.E	07.19.18	BU

DATE: 12.05.18
SOLICITATION NO.:
CONTRACT NO.: W912
FILE NUMBER:
DESIGNED BY: BU
DWN BY: CM
CKD BY: MJ
SUBMITTED BY: MC
PLOT SCALE: 1:1
PLOT DATE: 11/30/2018
SIZE: ANSI D
FILE NAME: W912DS_A2_CU-501.dgn

U.S. ARMY CORPS OF ENGINEERS
U.S. ARMY ENGINEER DISTRICT
NEW YORK
http://www.nan.usace.army.mil
MOFFATT & NICHOL
529 FIFTH AVE., 14TH FLOOR
NEW YORK, NY 10017
212-768-7454

INTEGRATED HURRICANE SANDY GENERAL RE-EVALUATION REPORT AND ENVIRONMENTAL IMPACT STATEMENT

TYPICAL DRAINAGE OUTFALL DETAILS - SHEET 1

SHEET ID
CU-501
SHEET 24 OF 26

PATH: Q:\NY\9781-02\500_CADD_Active_HFFRRF Report-App A2\Aecom dwgs\
FILE: W912DS_A2_CU-501.dgn
LAST PLOTTED BY: mestimable 11:31:47 AM 12/3/2018

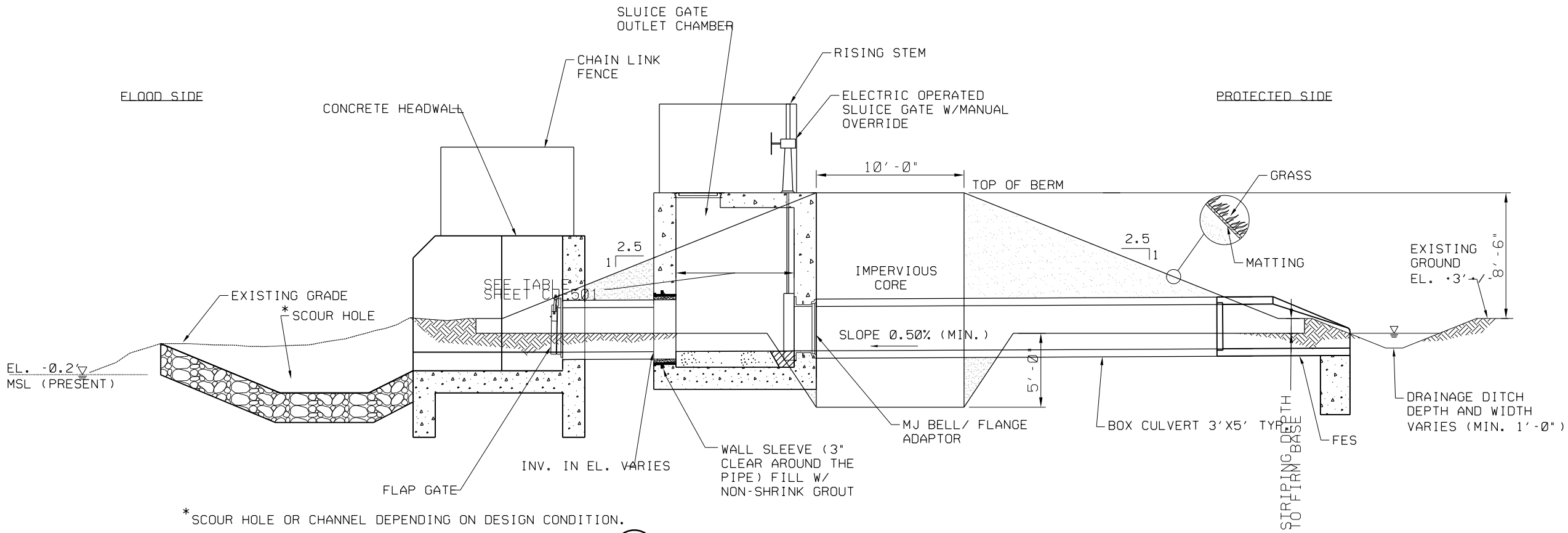

*SCOUR HOLE OR CHANNEL DEPENDING ON DESIGN CONDITION.

3 - TYPICAL OUTFALL DETAIL THROUGH BERM
SCALE: 1/4" = 1'-0"

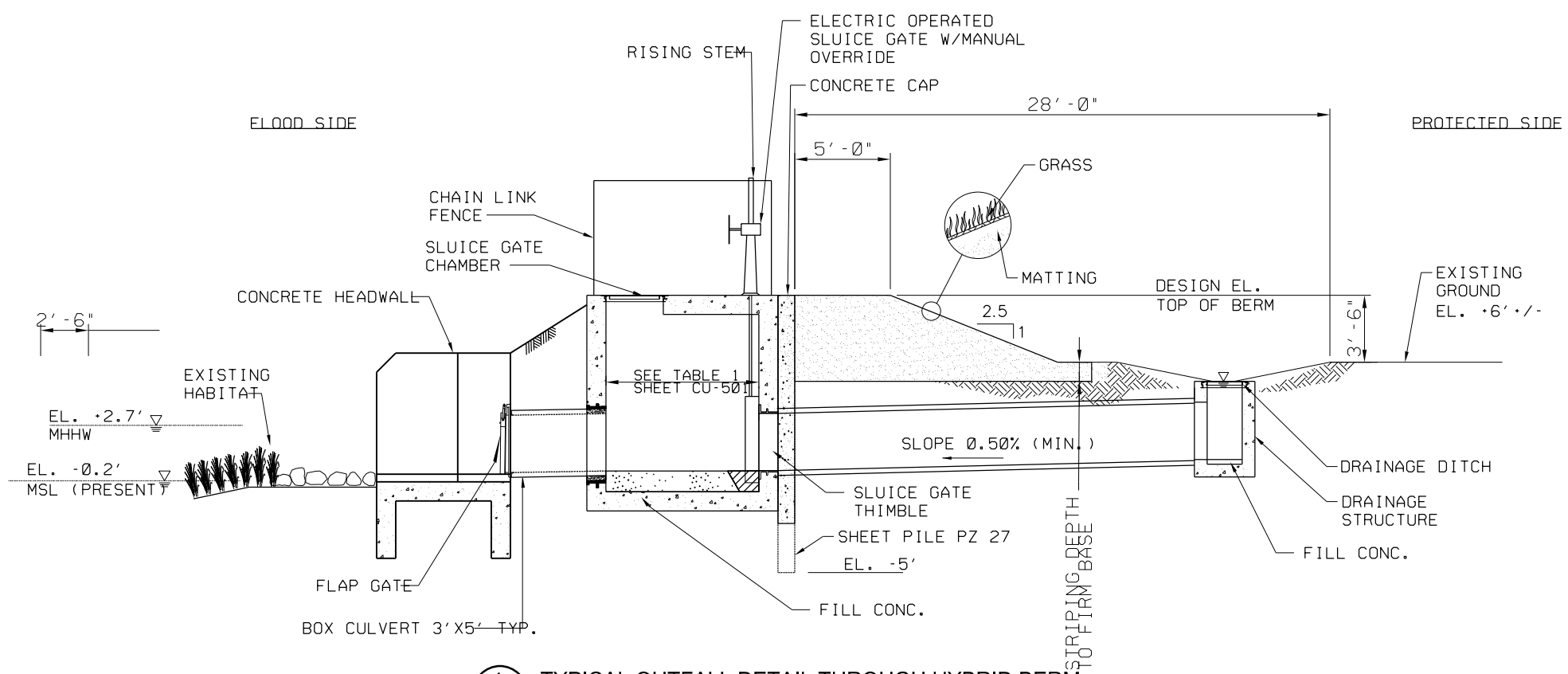

4 - TYPICAL OUTFALL DETAIL THROUGH HYBRID BERM
SCALE: 1/4" = 1'-0"

PRELIMINARY
NOT FOR CONSTRUCTION

0 2' 4' 8'
SCALE: 1/4" = 1'-0"

US Army Corps of Engineers®

MARK	DESCRIPTION	DATE	APPR.
E	FINAL GRR - APPENDIX A2.F	12.05.18	BU
D	DRAFT FINAL GRR - APPENDIX A2.E	11.19.18	BU
C	DRAFT FINAL GRR - APPENDIX A2.E	08.30.18	BU
B	DRAFT FINAL GRR - APPENDIX A1.E	08.20.18	BU
A	DRAFT FINAL GRR - APPENDIX A2.E	07.19.18	BU

U.S. ARMY CORPS OF ENGINEERS
U.S. ARMY ENGINEER DISTRICT
NEW YORK
http://www.nan.usace.army.mil
MOFFATT & NICHOL
529 FIFTH AVE., 14TH FLOOR
NEW YORK, NY 10017
212-768-7454

DESIGNED BY: BU
DWN BY: CM
CKD BY: MJ
SUBMITTED BY: MC
PLOT SCALE: 12
PLOT DATE: 12/05/2018
SIZE: ANSI D
FILE NAME: W912DS_A2_CU-502.dgn
DATE: 12/05/18
SOLICITATION NO.:
CONTRACT NO.: W781-02
FILE NUMBER:

INTEGRATED HURRICANE SANDY GENERAL RE-EVALUATION REPORT AND ENVIRONMENTAL IMPACT STATEMENT

TYPICAL DRAINAGE OUTFALL DETAILS - SHEET 2

SHEET ID
CU-502

SHEET 25 OF 26

PATH: Q:\NY\9781-02\500_CADD_Active_HFFRRF Report-App A2\Aecom dwgs\
FILE: W912DS_A2_CU-502.dgn
LAST PLOTTED BY: mestimable 12/3/2018 11:31:24 AM

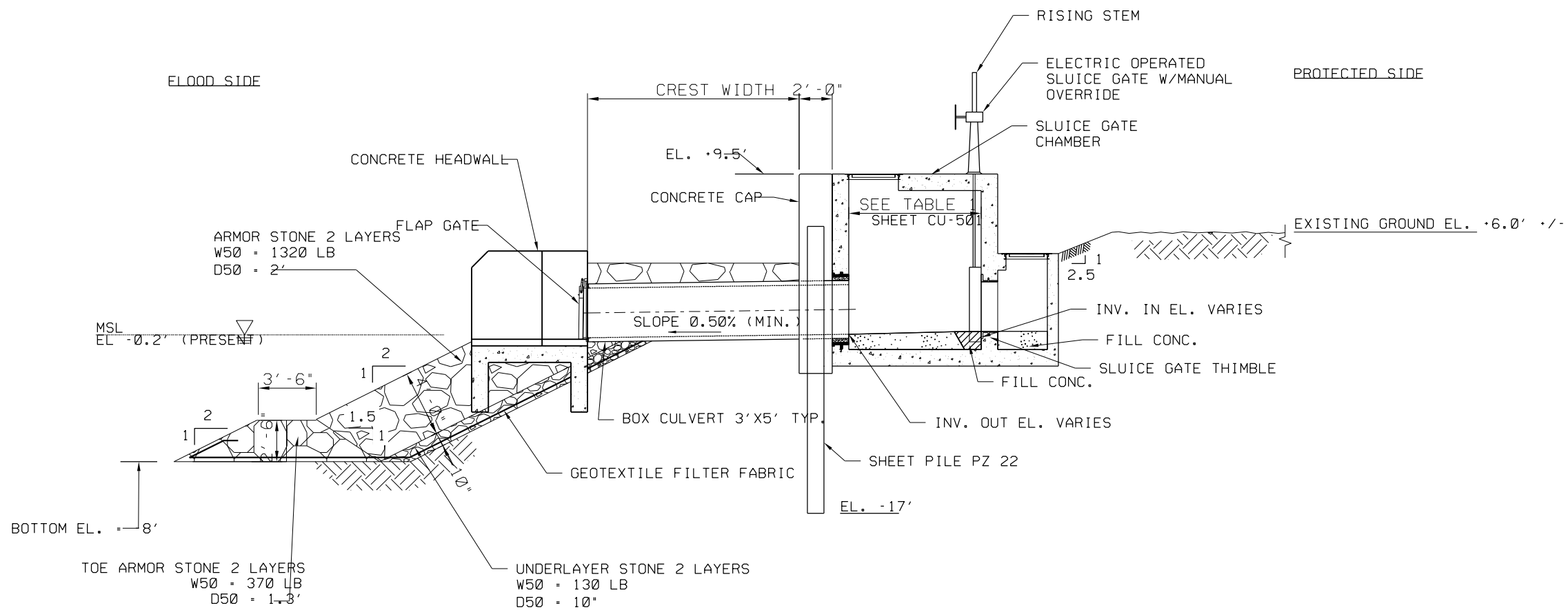

5 - TYPICAL OUTFALL DETAIL THROUGH REVETMENT WITH FOOLDWALL

SCALE: 1/4" = 1'-0"

PRELIMINARY
NOT FOR CONSTRUCTION

0 2' 4' 8'
SCALE: 1/4" = 1'-0"

US Army Corps of Engineers®

MARK	DESCRIPTION	DATE	APPR.
E	FINAL GRR - APPENDIX A2.F	12.05.18	BU
D	DRAFT FINAL GRR - APPENDIX A2.E	11.19.18	BU
C	DRAFT FINAL GRR - APPENDIX A2.E	08.30.18	BU
B	DRAFT FINAL GRR - APPENDIX A1.E	08.20.18	BU
A	DRAFT FINAL GRR - APPENDIX A2.E	07.19.18	BU

U.S. ARMY CORPS OF ENGINEERS
U.S. ARMY ENGINEER DISTRICT
NEW YORK
http://www.nan.usace.army.mil
MOFFATT & NICHOL
529 FIFTH AVE., 14TH FLOOR
NEW YORK, NY 10017
212-768-7454

DESIGNED BY: BU
DWN BY: CM
CKD BY: MJ
SUBMITTED BY: MC
PLOT SCALE: 1:2
PLOT DATE: 12/3/2018
SIZE: ANSI D
FILE NAME: W912DS_A2_CU-503.dgn
DATE: 12.05.18
SOLICITATION NO.:
CONTRACT NO.: W912-42
FILE NUMBER:

INTEGRATED HURRICANE SANDY GENERAL RE-EVALUATION REPORT AND ENVIRONMENTAL IMPACT STATEMENT

TYPICAL DRAINAGE OUTFALL DETAILS - SHEET 3

SHEET ID
CU-503
SHEET 26 OF 26

PATH: Q:\NY\97781-02\500_CADD_Active_HFFRRF Report-App A2\Aecom dwgs\
FILE: W912DS_A2_CU-503.dgn
LAST PLOTTED BY: mestimable 11:30:59 AM 12/3/2018