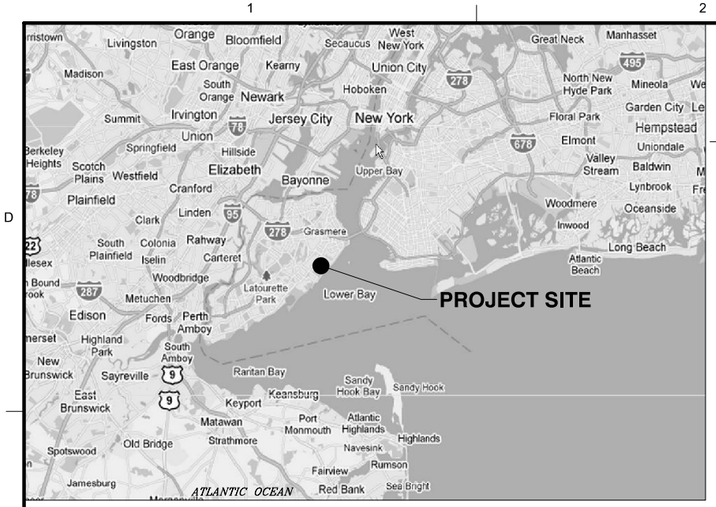

VICINITY MAP

NTS

COASTAL STORM RISK MANAGEMENT FEASIBILITY STUDY FOR THE SOUTH SHORE OF STATEN ISLAND

PHASE 1
FORT WADSWORTH TO OAKWOOD BEACH

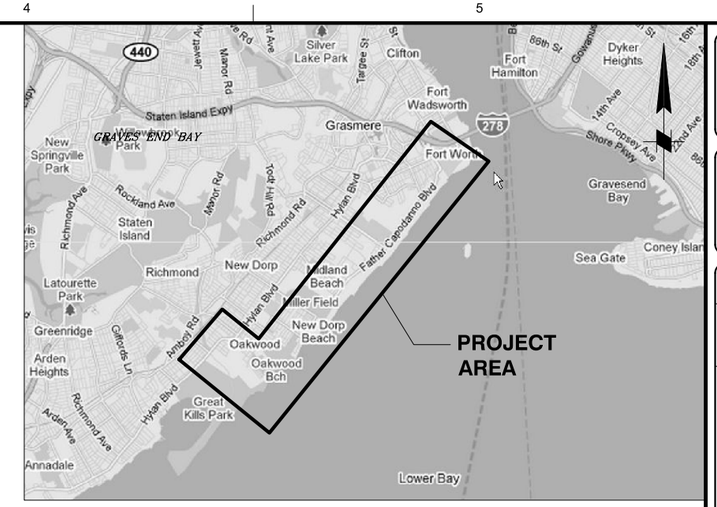

LOCATION PLAN

NTS

PHASE 1
FORT WADSWORTH TO OAKWOOD BEACH

INDEX TO DRAWINGS

SHT NO.	SHEET TITLE
G-001	COVER SHEET
G-101	OVERALL SITE AERIAL (1 OF 3)
G-102	OVERALL SITE AERIAL (2 OF 3)
G-103	OVERALL SITE AERIAL (3 OF 3)
G-104	SHEET KEY PLAN
C-100	SITE PLAN (1 OF 11)
C-101	SITE PLAN (2 OF 11)
C-102	SITE PLAN (3 OF 11)
C-103	SITE PLAN (4 OF 11)
C-104	SITE PLAN (5 OF 11)
C-105	SITE PLAN (6 OF 11)
C-106	SITE PLAN (7 OF 11)
C-107	SITE PLAN (8 OF 11)
C-108	SITE PLAN (9 OF 11)
C-109	SITE PLAN (10 OF 11)
C-110	SITE PLAN (11 OF 11)
C-301	SITE PROFILE (1 OF 6)
C-302	SITE PROFILE (2 OF 6)
C-303	SITE PROFILE (3 OF 6)
C-304	SITE PROFILE (4 OF 6)
C-305	SITE PROFILE (5 OF 6)
C-306	SITE PROFILE (6 OF 6)
C-501	TYPICAL SECTIONS REACH A-1
C-502	TYPICAL SECTIONS REACH A-2
C-503	TYPICAL SECTIONS REACH A-3
C-504	TYPICAL SECTIONS REACH A-4
C-505	TYPICAL SECTIONS REACH A-4 AT FORT WADSWORTH (1 OF 2)
C-506	TYPICAL SECTIONS REACH A-4 AT FORT WADSWORTH (2 OF 2)
C-507	TYPICAL SECTION BOARDWALK AND ROADWAY
C-508	TYPICAL SECTION BOARDWALK ACCESS
C-509	TYPICAL SECTION PEDESTRIAN ACCESS STAIRS
C-510	TYPICAL MVA AND DTP RAMP DETAIL
C-512	TYPICAL DRAINAGE CONTROL STRUCTURE
C-513	TIDE GATE STRUCTURE DETAILS
C-514	CONCRETE HEADWALL DETAILS
C-515	CLOSURE STRUCTURE PLAN AND ELEVATION
C-516	CLOSURE STRUCTURE DETAILS

FINAL JUNE 2016
NOT FOR CONSTRUCTION

US Army Corps of Engineers®

MARK	DESCRIPTION	DATE	APPR.
2	INCORPORATES SPONSOR AND STAKEHOLDER COMMENTS	3/21/2016	MAP
1	REVISIONS FOR AJR COMMENTS	1/9/2015	MAP

DESIGNED BY: MAP | DATE: 2016/03/11
DWN BY: | CKD BY: MAP | SOLICITATION NO.:
SUBMITTED BY: MARK PIRELLO | CONTRACT NO.:
PLOT SCALE: 1:1 | PLOT DATE: 6/2/2016 | FILE NUMBER:
SIZE: ANSI D | FILE NAME: 698705G-001.dgn

U.S. ARMY CORPS OF ENGINEERS
U.S. ARMY ENGINEER DISTRICT
NEW YORK
http://www.nan.usace.army.mil

MOFFATT & NICHOL
529 5th Avenue, 14th Floor
New York, New York 10017
212-768-7454

COASTAL STORM RISK MANAGEMENT
FEASIBILITY STUDY FOR THE
SOUTH SHORE OF STATEN ISLAND

COVER SHEET

SHEET IDENTIFICATION
G-001
SHEET X OF Y

PATH: Q:\TA\6987-05\cadd_Active_Preliminary\
FILE: 698705G-001.dgn
6/2/2016 3:08:08 PM
LAST PLOTTED BY: arsmith

MATCH LINE - SEE SHEET G-102

FINAL JUNE 2016
NOT FOR CONSTRUCTION

0 200' 400'
SCALE: GRAPHIC ONLY

PATH: Q:\TA\6987-05\cadd_Active_Preliminary\
FILE: 698705G-101.dgn
6/2/2016
3:08:35 PM
LAST PLOTTED BY: arsmith

US Army Corps of Engineers®

MARK	DESCRIPTION	DATE	APPR.
2	INCORPORATES SPONSOR AND STAKEHOLDER COMMENTS	3/21/2016	MAP
1	REVISIONS FOR AJR COMMENTS	1/9/2015	MAP

U.S. ARMY CORPS OF ENGINEERS
U.S. ARMY ENGINEER DISTRICT
NEW YORK
http://www.nan.usace.army.mil

MOFFATT & NICHOL
529 5th Avenue, 14th Floor
New York, New York 10017
212-768-7454

DESIGNED BY: MAP
DWN BY: DJMac
CKD BY: MAP
SUBMITTED BY: MARK PIELLO
PLOT SCALE: 1:1 ANSI D
PLOT DATE: 6/2/2016
FILE NUMBER: 2XXXX
FILE NAME: 698705G-101.dgn
SIZE: ANSI D
DATE: 2016/03/11
SOLICITATION NO.: XXXX
CONTRACT NO.: XXXX

COASTAL STORM RISK MANAGEMENT
FEASIBILITY STUDY FOR THE
SOUTH SHORE OF STATEN ISLAND

OVERALL SITE AERIAL (1 OF 3)

SHEET IDENTIFICATION
G-101
SHEET OF

FINAL JUNE 2016
NOT FOR CONSTRUCTION

0 200' 400'
SCALE: GRAPHIC ONLY

US Army Corps of Engineers®

MARK	DESCRIPTION	DATE	APPR.
2	INCORPORATES SPONSOR AND STAKEHOLDER COMMENTS	3/21/2016	MAP
1	REVISIONS FOR AJR COMMENTS	1/9/2015	MAP

U.S. ARMY CORPS OF ENGINEERS
U.S. ARMY ENGINEER DISTRICT
NEW YORK
http://www.nan.usace.army.mil

MOFFATT & NICHOL
529 5th Avenue, 14th Floor
New York, New York 10017
212-768-7454

DESIGNED BY: MAP
DWN BY: DJMiic
CKD BY: MAP
SUBMITTED BY: MARK PRELLO
PLOT SCALE: 1:1Model.dgn
PLOT DATE: 6/2/2016
SIZE: ANSI D
FILE NAME: 698705G-102.dgn
DATE: 2016/03/11
SOLICITATION NO.: XXXX
CONTRACT NO.: XXXX
FILE NUMBER: XXXX

COASTAL STORM RISK MANAGEMENT
FEASIBILITY STUDY FOR THE
SOUTH SHORE OF STATEN ISLAND

OVERALL SITE AERIAL (2 OF 3)

SHEET IDENTIFICATION
G-102
SHEET OF

PATH: Q:\TA\6987-05\cadd_Active_Preliminary\
FILE: 698705G-102.dgn
6/2/2016 3:08:51 PM
LAST PLOTTED BY: arsmith

FINAL JUNE 2016
NOT FOR CONSTRUCTION

0 200' 400'
SCALE: GRAPHIC ONLY

US Army Corps of Engineers®

MARK	DESCRIPTION	DATE	APPR.
2	INCORPORATES SPONSOR AND STAKEHOLDER COMMENTS	3/21/2016	MAP
1	REVISIONS FOR AJR COMMENTS	1/9/2015	MAP

U.S. ARMY CORPS OF ENGINEERS
U.S. ARMY ENGINEER DISTRICT
NEW YORK
http://www.nan.usace.army.mil

MOFFATT & NICHOL
529 5th Avenue, 14th Floor
New York, New York 10017
212-768-7454

DESIGNED BY: MAP
DWN BY: DJMac
CKD BY: MAP
SUBMITTED BY: MARK PIRELLO
PLOT SCALE: 1:1440.87
PLOT DATE: 6/2/2016
DATE: 2016/03/11
SOLICITATION NO.: XXXX
CONTRACT NO.: XXXX
FILE NUMBER: XXXX
SIZE: ANSI D
FILE NAME: 698705G-103.dgn

COASTAL STORM RISK MANAGEMENT
FEASIBILITY STUDY FOR THE
SOUTH SHORE OF STATEN ISLAND

OVERALL SITE AERIAL (3 OF 3)

SHEET IDENTIFICATION
G-103
SHEET OF

PATH: Q:\TA\6987-05\cadd_Active_Preliminary\
FILE: 698705G-103.dgn
6/2/2016 3:09:13 PM
LAST PLOTTED BY: arsmith

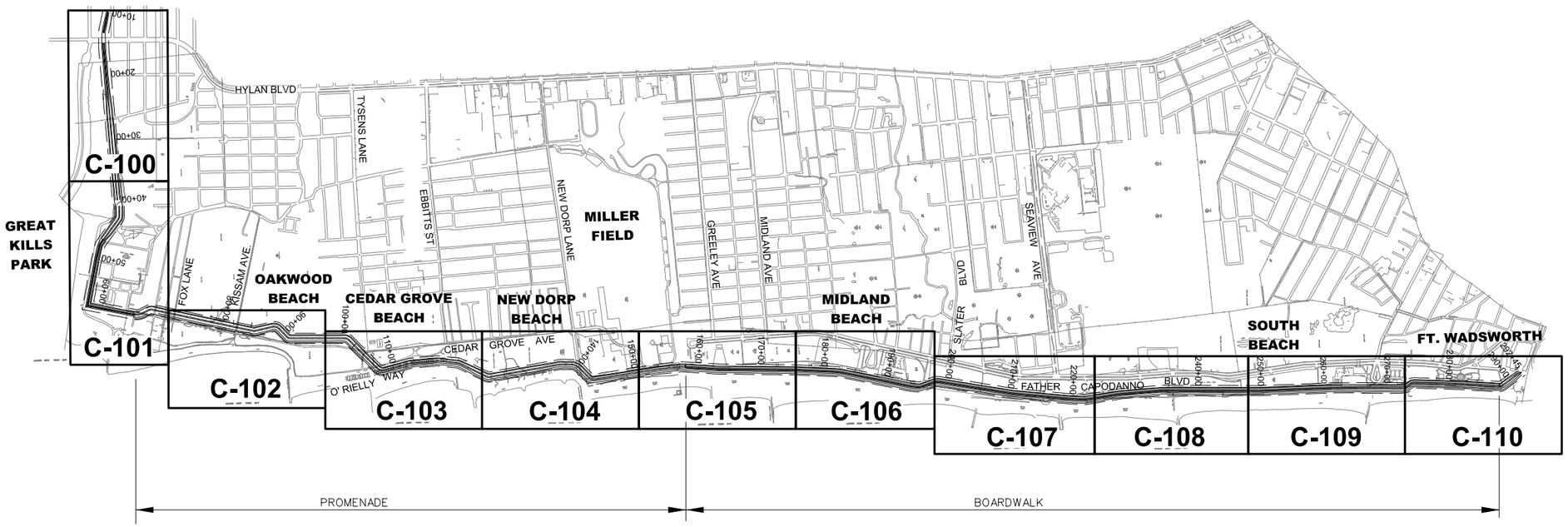

FINAL JUNE 2016
NOT FOR CONSTRUCTION

0 1000' 2000'
GRAPHICAL SCALE

US Army Corps of Engineers®

MARK	DESCRIPTION	DATE	APPR.
2	INCORPORATES SPONSOR AND STAKEHOLDER COMMENTS	3/21/2016	MAP
1	REVISIONS FOR AJR COMMENTS	1/9/2015	MAP

U.S. ARMY CORPS OF ENGINEERS
U.S. ARMY ENGINEER DISTRICT
NEW YORK
http://www.nan.usace.army.mil

MOFFATT & NICHOL
529 5th Avenue, 14th Floor
New York, New York 10017
212-768-7454

DESIGNED BY: MAP
DWN BY: DJMic
CKD BY: MAP
SUBMITTED BY:
PLOT SCALE: 1:20000
PLOT DATE: 6/2/2016
SIZE: ANSI D
FILE NAME: 698705G-104.dgn
DATE: 2016/03/11
SOLICITATION NO.:
CONTRACT NO.:
FILE NUMBER:

COASTAL STORM RISK MANAGEMENT
FEASIBILITY STUDY FOR THE
SOUTH SHORE OF STATEN ISLAND

SHEET KEY PLAN

SHEET IDENTIFICATION
G-104
SHEET X OF Y

PATH: Q:\TA\6987-05\cadd_Active_Preliminary\
FILE: 698705G-104.dgn
6/2/2016 3:09:33 PM arsmith
LAST PLOTTED BY:

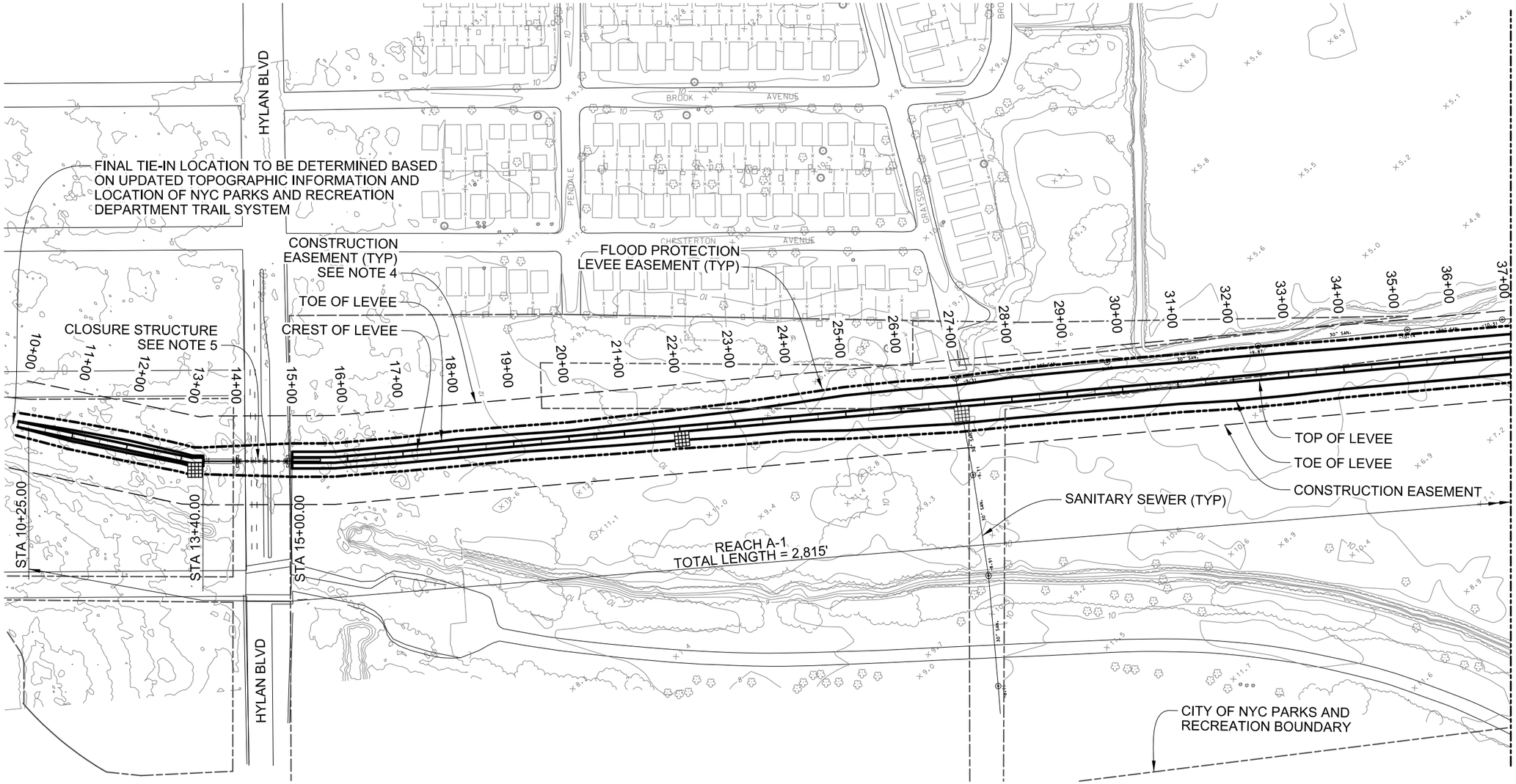

NOTES

1. TYPICAL SECTIONS SHOWN ON SHEETS C-501 TO C-507.
2. ALL ELEVATIONS REFERENCED TO NGVD 29.
3. STRUCTURE LIMITS SHOWN FOR LEVEL OF PROTECTION ARE BASED ON THE 15.6 FT SWL.
4. CONSTRUCTION EASEMENT LINE @ 50' OFFSET TO PROPOSED STRUCTURES.
5. CLOSURE STRUCTURE ON SHEETS C-515 & C-516.
6. SANITARY SERVICE ROAD SECTION SHOWN ON SHEET C-507.
7. THE LINE OF PROTECTION (LOP) STRUCTURES WITHIN THE OAKWOOD BEACH CORRIDOR HAVE BEEN DESIGNED TO ACCOMMODATE THE CITY OF NEW YORK'S STATEN ISLAND BLUEBELT PLAN.

LEGEND

- PA — PEDESTRIAN ACCESS STAIRS SEE SHEET C-509
- DTP — COMBINED TRUCK & PEDESTRIAN ACCESS RAMP, SEE SHEET C-510
- MVA — MAINTENANCE VEHICLE ACCESS RAMP, SEE SHEET C-510
- BA — BOARDWALK ACCESS SEE SHEET C-508
- DRAINAGE CONTROL STRUCTURE, SEE SHEET C-512
- SANITARY/DRAINAGE CONTROL STRUCTURE SEE SHEET C-514
- TG — TIDE GATE SEE SHEET C-513
- 30" SAN. -8.71 — SANITARY SEWER
- 8' x 4' STM — MAJOR STORM SEWER OUTFALL
- SAND COVER
- BOARDWALK SEE SHEET C-507
- PROMENADE SEE SHEET C-504

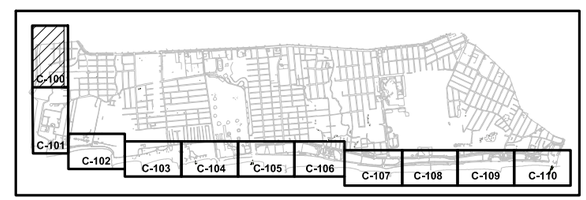

KEY PLAN

SCALE:1"=100'

FINAL JUNE 2016
NOT FOR CONSTRUCTION

US Army Corps of Engineers®

MARK	DESCRIPTION	DATE	APPR.
2	INCORPORATES SPONSOR AND STAKEHOLDER COMMENTS	3/21/2016	MAP
1	REVISIONS FOR AJR COMMENTS	1/9/2015	MAP

U.S. ARMY CORPS OF ENGINEERS
U.S. ARMY ENGINEER DISTRICT
NEW YORK
http://www.nan.usace.army.mil

MOFFATT & NICHOL
529 5th Avenue, 14th Floor
New York, New York 10017
212-768-7454

DESIGNED BY: MAP
DWN BY: DJMac
CKD BY: MAP
SUBMITTED BY: MARK PIRELLO
PLOT SCALE: AS SHOWN
PLOT DATE: 6/2/2016
SIZE: ANSI D
FILE NAME: 698705C-100.dgn
DATE: 2016/03/21
SOLICITATION NO.: XXXX
CONTRACT NO.: XXXX
FILE NUMBER: XXXX

COASTAL STORM RISK MANAGEMENT
FEASIBILITY STUDY FOR THE
SOUTH SHORE OF STATEN ISLAND

SITE PLAN (1 OF 11)

SHEET IDENTIFICATION
C-100
SHEET OF

PATH: Q:\TA\6987-05\cadd_Active_Preliminary\
FILE: 698705C-100.dgn
6/2/2016 3:09:37 PM
LAST PLOTTED BY: arsmith

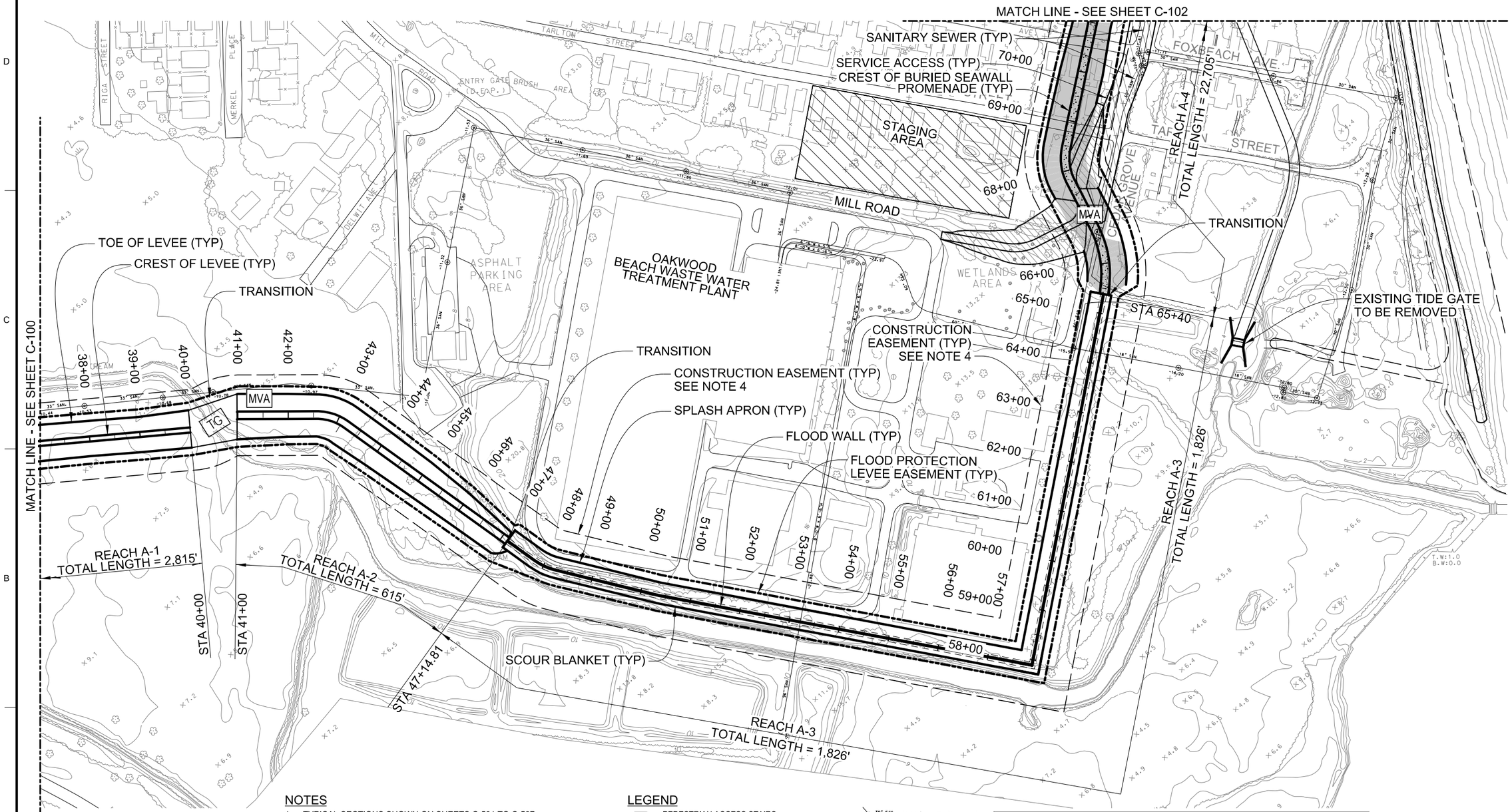

NOTES

1. TYPICAL SECTIONS SHOWN ON SHEETS C-501 TO C-507.
2. ALL ELEVATIONS REFERENCED TO NGVD 29.
3. STRUCTURE LIMITS SHOWN FOR LEVEL OF PROTECTION ARE BASED ON THE 15.6 FT SWL.
4. CONSTRUCTION EASEMENT LINE @ 50' OFFSET TO PROPOSED STRUCTURES.
5. CLOSURE STRUCTURE ON SHEETS C-515 & C-516.
6. SANITARY SERVICE ROAD SECTION SHOWN ON SHEET C-507.
7. THE LINE OF PROTECTION (LOP) STRUCTURES WITHIN THE OAKWOOD BEACH CORRIDOR HAVE BEEN DESIGNED TO ACCOMMODATE THE CITY OF NEW YORK'S STATEN ISLAND BLUEBELT PLAN.

LEGEND

- PA — PEDESTRIAN ACCESS STAIRS SEE SHEET C-509
- DTP — COMBINED TRUCK & PEDESTRIAN ACCESS RAMP, SEE SHEET C-510
- MVA — MAINTENANCE VEHICLE ACCESS RAMP, SEE SHEET C-510
- BA — BOARDWALK ACCESS SEE SHEET C-508
- DRAINAGE CONTROL STRUCTURE, SEE SHEET C-512
- SANITARY/DRAINAGE CONTROL STRUCTURE SEE SHEET C-514
- TG — TIDE GATE SEE SHEET C-513
- 30" SAN. -8.71 — SANITARY SEWER
- 8' x 11' STD — MAJOR STORM SEWER OUTFALL
- SAND COVER
- BOARDWALK SEE SHEET C-507
- PROMENADE SEE SHEET C-504

FINAL JUNE 2016
NOT FOR CONSTRUCTION

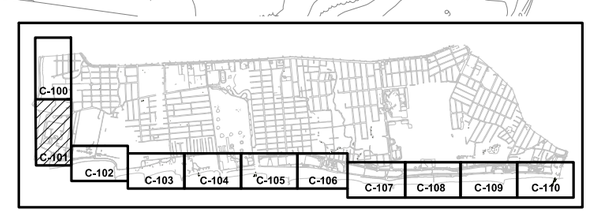

KEY PLAN

0 100' 200'
SCALE:1"=100'

US Army Corps of Engineers®

MARK	DESCRIPTION	DATE	APPR.
2	INCORPORATES SPONSOR AND STAKEHOLDER COMMENTS	3/21/2016	MAP
1	REVISIONS FOR AJR COMMENTS	1/9/2015	MAP

U.S. ARMY CORPS OF ENGINEERS
U.S. ARMY ENGINEER DISTRICT
NEW YORK
http://www.nan.usace.army.mil
MOFFATT & NICHOL
529 5th Avenue, 14th Floor
New York, New York 10017
212-768-7454

DESIGNED BY: MAP
DWN BY: DJMic
CKD BY: MAP
SUBMITTED BY: MARK PIRELLO
DATE: 2016/03/11
SOLICITATION NO.: XXXX
CONTRACT NO.: XXXX
PLOT SCALE: 1:1
PLOT DATE: 6/2/2016
FILE NUMBER: XXXX
SIZE: ANSI D
FILE NAME: 698705C-101.dgn

COASTAL STORM RISK MANAGEMENT FEASIBILITY STUDY FOR THE SOUTH SHORE OF STATEN ISLAND

SITE PLAN (2 OF 11)

SHEET IDENTIFICATION
C-101
SHEET OF

PATH: Q:\TA\6987-05\cadd_Active_Preliminary\
FILE: 698705C-101.dgn
6/2/2016 3:09:39 PM
LAST PLOTTED BY: arsmith

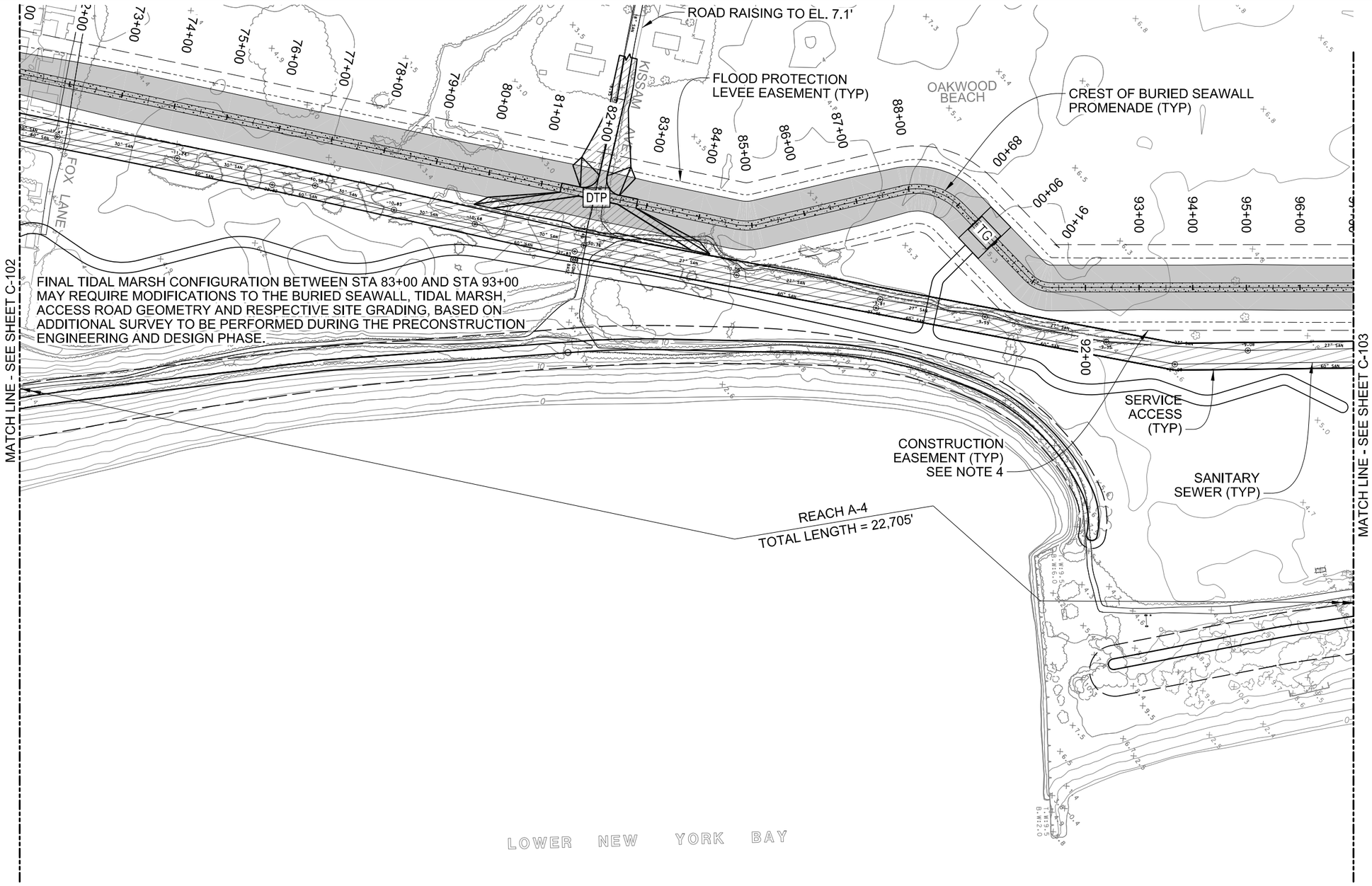

NOTES

1. TYPICAL SECTIONS SHOWN ON SHEETS C-501 TO C-507.
2. ALL ELEVATIONS REFERENCED TO NGVD 29.
3. STRUCTURE LIMITS SHOWN FOR LEVEL OF PROTECTION ARE BASED ON THE 15.6 FT SWL.
4. CONSTRUCTION EASEMENT LINE @ 50' OFFSET TO PROPOSED STRUCTURES.
5. CLOSURE STRUCTURE ON SHEETS C-515 & C-516.
6. SANITARY SERVICE ROAD SECTION SHOWN ON SHEET C-507.
7. THE LINE OF PROTECTION (LOP) STRUCTURES WITHIN THE OAKWOOD BEACH CORRIDOR HAVE BEEN DESIGNED TO ACCOMMODATE THE CITY OF NEW YORK'S STATEN ISLAND BLUEBELT PLAN.

LEGEND

- PA — PEDESTRIAN ACCESS STAIRS SEE SHEET C-509
- DTP — COMBINED TRUCK & PEDESTRIAN ACCESS RAMP, SEE SHEET C-510
- MVA — MAINTENANCE VEHICLE ACCESS RAMP, SEE SHEET C-510
- BA — BOARDWALK ACCESS SEE SHEET C-508
- DRAINAGE CONTROL STRUCTURE, SEE SHEET C-512
- SANITARY/DRAINAGE CONTROL STRUCTURE SEE SHEET C-514
- TG — TIDE GATE SEE SHEET C-513
- 30" SAN. -8.71 — SANITARY SEWER
- W x H STM — MAJOR STORM SEWER OUTFALL
- SAND COVER
- BOARDWALK SEE SHEET C-507
- PROMENADE SEE SHEET C-504

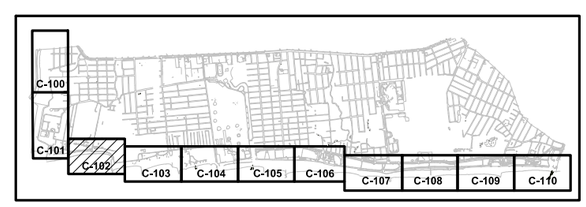

KEY PLAN

0 100' 200'

SCALE:1"=100'

FINAL JUNE 2016
NOT FOR CONSTRUCTION

US Army Corps of Engineers®

MARK	DESCRIPTION	DATE	APPR.
2	INCORPORATES SPONSOR AND STAKEHOLDER COMMENTS	3/21/2016	MAP
1	REVISIONS FOR AJR COMMENTS	1/9/2015	MAP

U.S. ARMY CORPS OF ENGINEERS
U.S. ARMY ENGINEER DISTRICT
NEW YORK
http://www.nan.usace.army.mil

MOFFATT & NICHOL
529 5th Avenue, 14th Floor
New York, New York 10017
212-768-7454

DESIGNED BY: MAP
DATE: 2016/03/11
DWN BY: DJMac
CKD BY: MAP
SOLICITATION NO.: XXXX
SUBMITTED BY: MARK PIRELLO
CONTRACT NO.: XXXX
PLOT SCALE: 1:200
PLOT DATE: 6/2/2016
FILE NUMBER: XXXX
SIZE: ANSI D
FILE NAME: 698705C-102.dgn

COASTAL STORM RISK MANAGEMENT FEASIBILITY STUDY FOR THE SOUTH SHORE OF STATEN ISLAND

SITE PLAN (3 OF 11)

SHEET IDENTIFICATION
C-102
SHEET OF

PATH: Q:\TA\6987-05\cadd_Active_Preliminary\
FILE: 698705C-102.dgn
6/2/2016 3:09:44 PM arsmith
LAST PLOTTED BY:

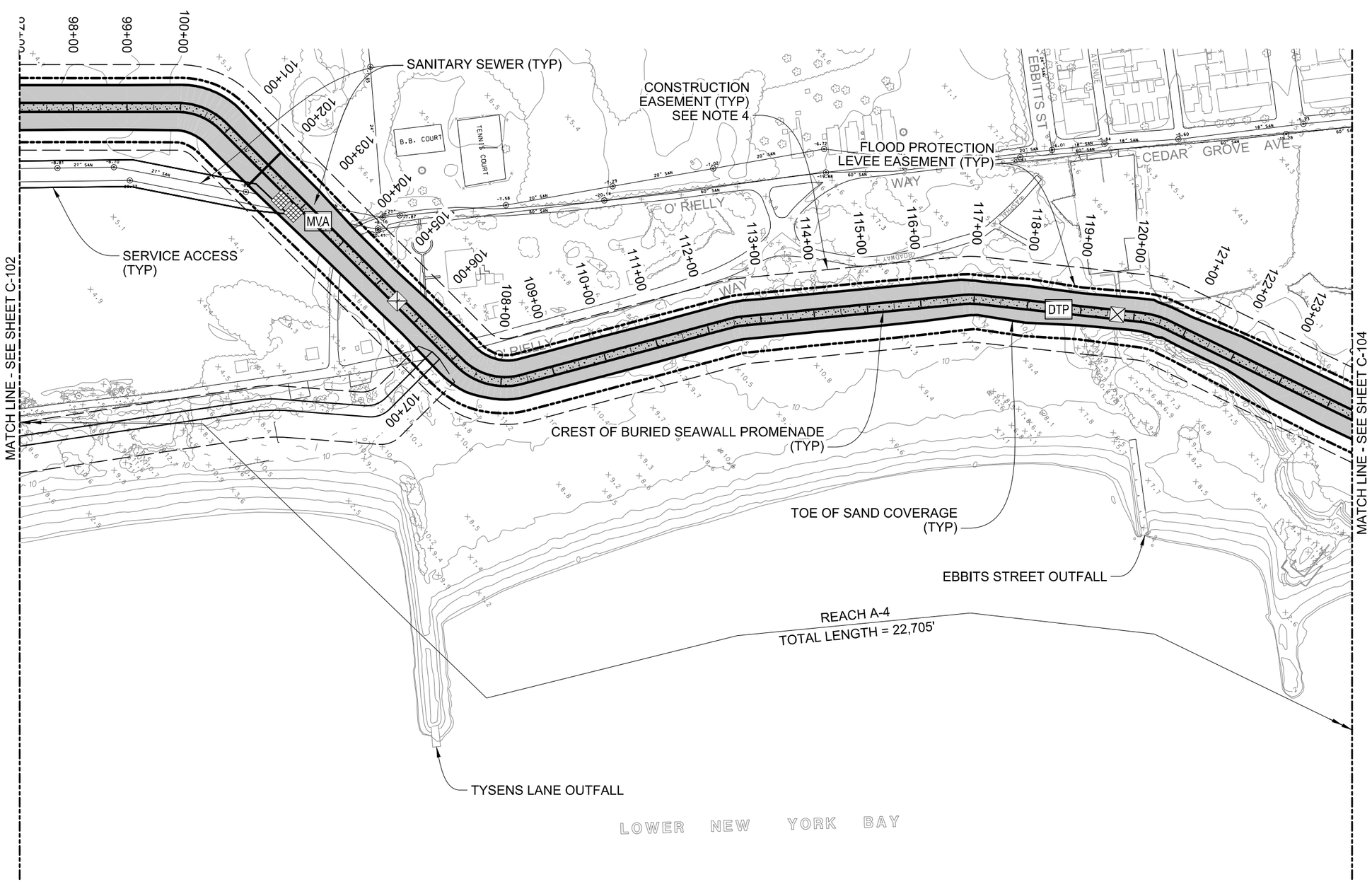

NOTES

1. TYPICAL SECTIONS SHOWN ON SHEETS C-501 TO C-507.
2. ALL ELEVATIONS REFERENCED TO NGVD 29.
3. STRUCTURE LIMITS SHOWN FOR LEVEL OF PROTECTION ARE BASED ON THE 15.6 FT SWL.
4. CONSTRUCTION EASEMENT LINE @ 50' OFFSET TO PROPOSED STRUCTURES.
5. CLOSURE STRUCTURE ON SHEETS C-515 & C-516.
6. SANITARY SERVICE ROAD SECTION SHOWN ON SHEET C-507.
7. THE LINE OF PROTECTION (LOP) STRUCTURES WITHIN THE OAKWOOD BEACH CORRIDOR HAVE BEEN DESIGNED TO ACCOMMODATE THE CITY OF NEW YORK'S STATEN ISLAND BLUEBELT PLAN.

LEGEND

- PA — PEDESTRIAN ACCESS STAIRS SEE SHEET C-509
- DTP — COMBINED TRUCK & PEDESTRIAN ACCESS RAMP, SEE SHEET C-510
- MVA — MAINTENANCE VEHICLE ACCESS RAMP, SEE SHEET C-510
- BA — BOARDWALK ACCESS SEE SHEET C-508
- DRAINAGE CONTROL STRUCTURE, SEE SHEET C-512
- SANITARY/DRAINAGE CONTROL STRUCTURE SEE SHEET C-514
- TG — TIDE GATE SEE SHEET C-513
- 30" SAN. -6.71 — SANITARY SEWER
- W x H STM — MAJOR STORM SEWER OUTFALL
- SAND COVER
- BOARDWALK SEE SHEET C-507
- PROMENADE SEE SHEET C-504

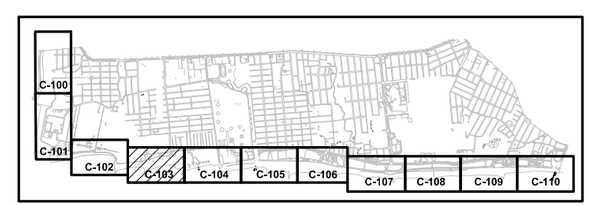

KEY PLAN

SCALE:1"=100'

FINAL JUNE 2016
NOT FOR CONSTRUCTION

US Army Corps of Engineers®

MARK	DESCRIPTION	DATE	APPR.
2	INCORPORATES SPONSOR AND STAKEHOLDER COMMENTS	3/21/2016	MAP
1	REVISIONS FOR AJR COMMENTS	1/9/2015	MAP

U.S. ARMY CORPS OF ENGINEERS
U.S. ARMY ENGINEER DISTRICT
NEW YORK
http://www.nan.usace.army.mil

MOFFATT & NICHOL
529 5th Avenue, 14th Floor
New York, New York 10017
212-768-7454

DESIGNED BY: MAP
DWN BY: DJMac
CKD BY: MAP
SUBMITTED BY: MARK PIRELLO
PLOT SCALE: 1:200
PLOT DATE: 6/2/2016
SIZE: ANSI D
FILE NAME: 698705C-103.dgn
DATE: 2016/03/11
SOLICITATION NO.: XXXX
CONTRACT NO.: XXXX
FILE NUMBER: XXXX

COASTAL STORM RISK MANAGEMENT
FEASIBILITY STUDY FOR THE
SOUTH SHORE OF STATEN ISLAND

SITE PLAN (4 OF 11)

SHEET IDENTIFICATION
C-103
SHEET OF

PATH: Q:\TA\6987-05\cadd_Active_Preliminary\
FILE: 698705C-103.dgn
6/2/2016 4:17:45 PM
LAST PLOTTED BY: arsmith

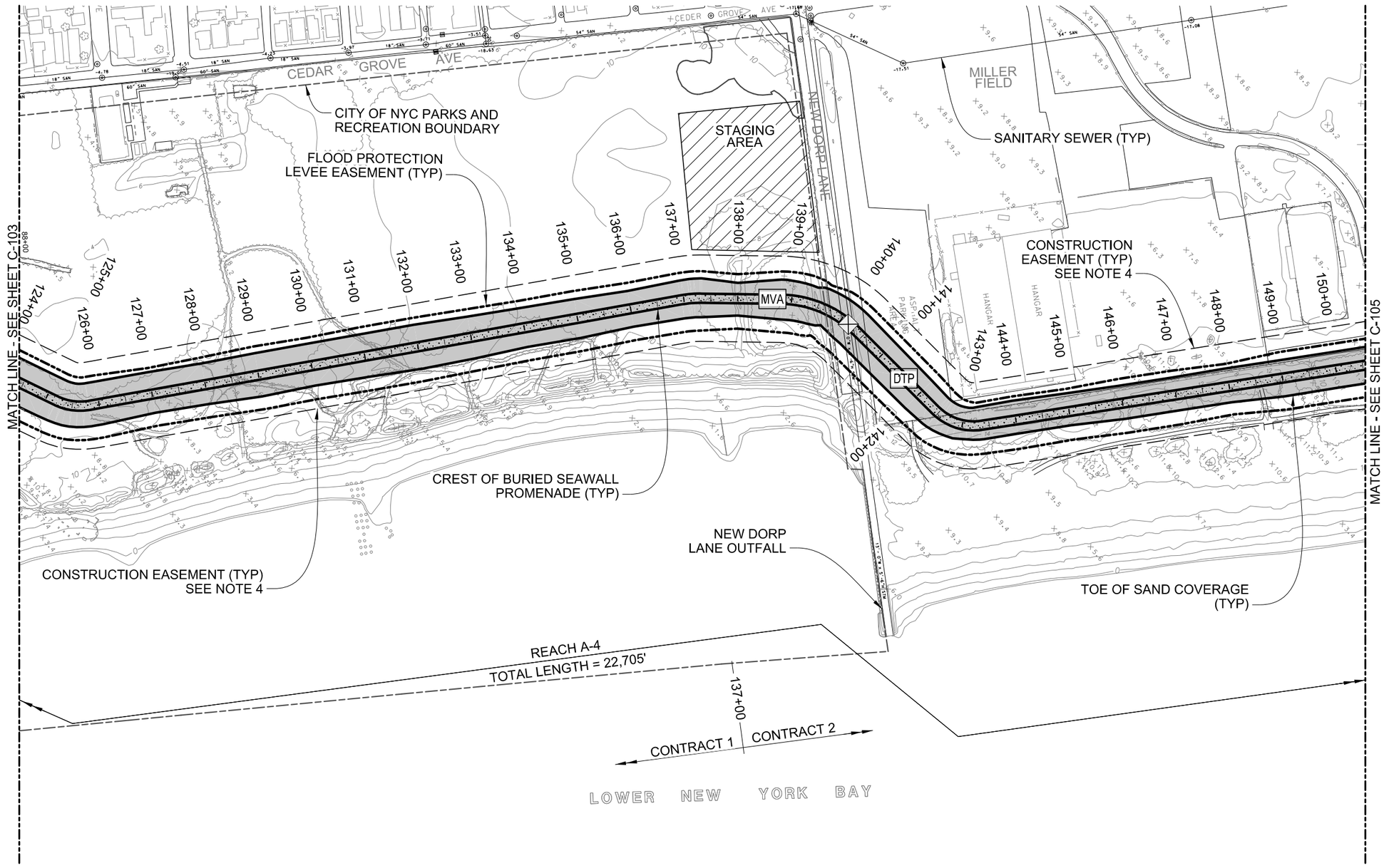

NOTES

1. TYPICAL SECTIONS SHOWN ON SHEETS C-501 TO C-507.
2. ALL ELEVATIONS REFERENCED TO NGVD 29.
3. STRUCTURE LIMITS SHOWN FOR LEVEL OF PROTECTION ARE BASED ON THE 15.6 FT SWL.
4. CONSTRUCTION EASEMENT LINE @ 50' OFFSET TO PROPOSED STRUCTURES.
5. CLOSURE STRUCTURE ON SHEETS C-515 & C-516.
6. SANITARY SERVICE ROAD SECTION SHOWN ON SHEET C-507.
7. THE LINE OF PROTECTION (LOP) STRUCTURES WITHIN THE OAKWOOD BEACH CORRIDOR HAVE BEEN DESIGNED TO ACCOMMODATE THE CITY OF NEW YORK'S STATEN ISLAND BLUEBELT PLAN.

LEGEND

- PA — PEDESTRIAN ACCESS STAIRS SEE SHEET C-509
- DTP — COMBINED TRUCK & PEDESTRIAN ACCESS RAMP, SEE SHEET C-510
- MVA — MAINTENANCE VEHICLE ACCESS RAMP, SEE SHEET C-510
- BA — BOARDWALK ACCESS SEE SHEET C-508
- DRAINAGE CONTROL STRUCTURE, SEE SHEET C-512
- SANITARY/DRAINAGE CONTROL STRUCTURE SEE SHEET C-514
- TG — TIDE GATE SEE SHEET C-513
- 30" SAN. -8.71 — SANITARY SEWER
- R.C.P. STM — MAJOR STORM SEWER OUTFALL
- SAND COVER
- BOARDWALK SEE SHEET C-507
- PROMENADE SEE SHEET C-504

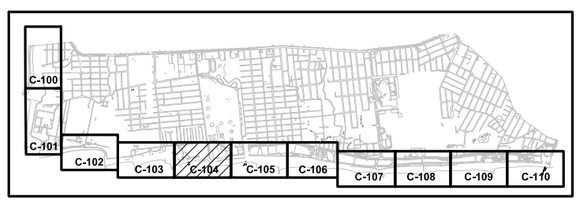

KEY PLAN

0 100' 200'
SCALE:1"=100'

FINAL JUNE 2016
NOT FOR CONSTRUCTION

US Army Corps of Engineers®

MARK	DESCRIPTION	DATE	APPR.
2	INCORPORATES SPONSOR AND STAKEHOLDER COMMENTS	3/21/2016	MAP
1	REVISIONS FOR AJR COMMENTS	1/9/2015	MAP

U.S. ARMY CORPS OF ENGINEERS
U.S. ARMY ENGINEER DISTRICT
NEW YORK
http://www.nan.usace.army.mil

MOFFATT & NICHOL
529 5th Avenue, 14th Floor
New York, New York 10017
212-768-7454

DESIGNED BY: MAP | DATE: 2016/03/11
DWN BY: DJ/Mac | CKD BY: MAP | SOLICITATION NO.: XXXX
SUBMITTED BY: MARK PIRELLO | CONTRACT NO.: XXXX
PLOT SCALE: 1:20000 | PLOT DATE: 6/2/2016 | FILE NUMBER: XXXX
SIZE: ANSI D | FILE NAME: 698705C-104.dgn

COASTAL STORM RISK MANAGEMENT
FEASIBILITY STUDY FOR THE
SOUTH SHORE OF STATEN ISLAND

SITE PLAN (5 OF 11)

SHEET IDENTIFICATION
C-104
SHEET OF

PATH: Q:\TA\6987-05\cadd_Active_Preliminary\
FILE: 698705C-104.dgn
6/2/2016 3:09:48 PM
LAST PLOTTED BY: arsmith

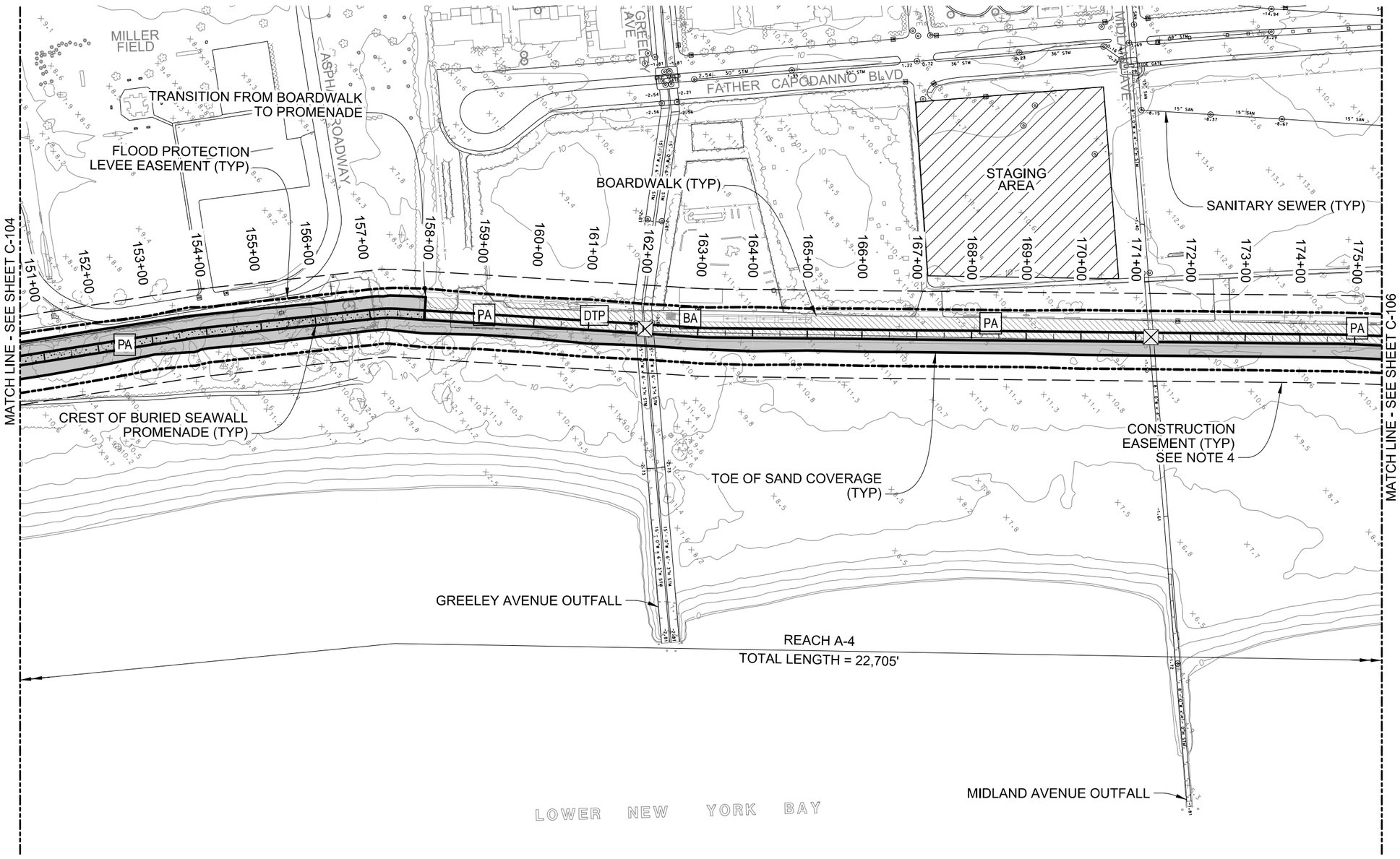

NOTES

1. TYPICAL SECTIONS SHOWN ON SHEETS C-501 TO C-507.
2. ALL ELEVATIONS REFERENCED TO NGVD 29.
3. STRUCTURE LIMITS SHOWN FOR LEVEL OF PROTECTION ARE BASED ON THE 15.6 FT SWL.
4. CONSTRUCTION EASEMENT LINE @ 50' OFFSET TO PROPOSED STRUCTURES.
5. CLOSURE STRUCTURE ON SHEETS C-515 & C-516.
6. SANITARY SERVICE ROAD SECTION SHOWN ON SHEET C-507.
7. THE LINE OF PROTECTION (LOP) STRUCTURES WITHIN THE OAKWOOD BEACH CORRIDOR HAVE BEEN DESIGNED TO ACCOMMODATE THE CITY OF NEW YORK'S STATEN ISLAND BLUEBELT PLAN.

FINAL JUNE 2016
NOT FOR CONSTRUCTION

LEGEND

- PA — PEDESTRIAN ACCESS STAIRS SEE SHEET C-509
- DTP — COMBINED TRUCK & PEDESTRIAN ACCESS RAMP, SEE SHEET C-510
- MVA — MAINTENANCE VEHICLE ACCESS RAMP, SEE SHEET C-510
- BA — BOARDWALK ACCESS SEE SHEET C-508
- DRAINAGE CONTROL STRUCTURE, SEE SHEET C-512
- SANITARY/DRAINAGE CONTROL STRUCTURE SEE SHEET C-514
- TG — TIDE GATE SEE SHEET C-513
- 30" SAN. -8.71 — SANITARY SEWER
- 36" STM — MAJOR STORM SEWER OUTFALL
- SAND COVER
- BOARDWALK SEE SHEET C-507
- PROMENADE SEE SHEET C-504

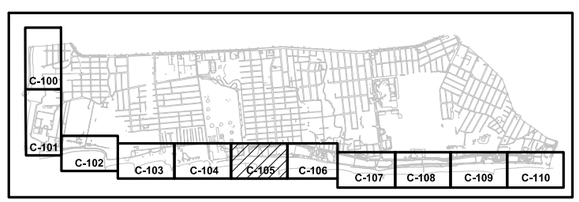

KEY PLAN

SCALE:1"=100'

US Army Corps of Engineers®

MARK	DESCRIPTION	DATE	APPR.
2	INCORPORATES SPONSOR AND STAKEHOLDER COMMENTS	3/21/2016	MAP
1	REVISIONS FOR AJR COMMENTS	1/9/2015	MAP

U.S. ARMY CORPS OF ENGINEERS
U.S. ARMY ENGINEER DISTRICT
NEW YORK
http://www.nan.usace.army.mil

MOFFATT & NICHOL
529 5th Avenue, 14th Floor
New York, New York 10017
212-768-7454

DESIGNED BY: MAP
DWN BY: DJMac
CKD BY: MAP
SUBMITTED BY: MARK PIRELLO
PLOT SCALE: 1:1000
PLOT DATE: 6/2/2016
SIZE: ANSI D
FILE NAME: 698705C-105.dgn
DATE: 2016/03/11
SOLICITATION NO.: XXXX
CONTRACT NO.: XXXX
FILE NUMBER: XXXX

COASTAL STORM RISK MANAGEMENT
FEASIBILITY STUDY FOR THE
SOUTH SHORE OF STATEN ISLAND

SITE PLAN (6 OF 11)

SHEET IDENTIFICATION
C-105
SHEET OF

LAST PLOTTED BY: arsmith 3:10:32 PM 6/2/2016 FILE: 698705C-105.dgn
PATH: Q:\TA\6987-05\cadd_Active_Preliminary\

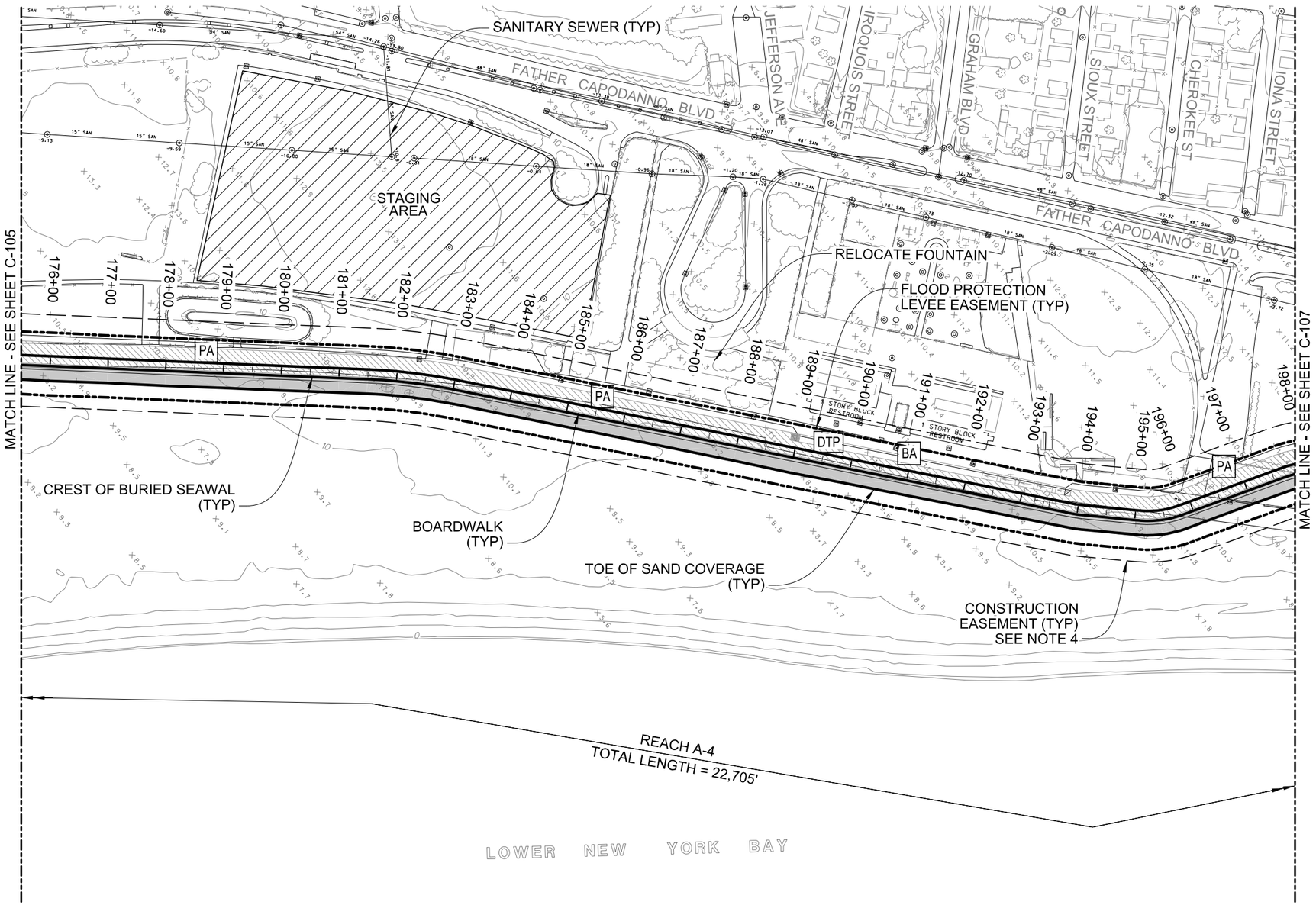

NOTES

1. TYPICAL SECTIONS SHOWN ON SHEETS C-501 TO C-507.
2. ALL ELEVATIONS REFERENCED TO NGVD 29.
3. STRUCTURE LIMITS SHOWN FOR LEVEL OF PROTECTION ARE BASED ON THE 15.6 FT SWL.
4. CONSTRUCTION EASEMENT LINE @ 50' OFFSET TO PROPOSED STRUCTURES.
5. CLOSURE STRUCTURE ON SHEETS C-515 & C-516.
6. SANITARY SERVICE ROAD SECTION SHOWN ON SHEET C-507.
7. THE LINE OF PROTECTION (LOP) STRUCTURES WITHIN THE OAKWOOD BEACH CORRIDOR HAVE BEEN DESIGNED TO ACCOMMODATE THE CITY OF NEW YORK'S STATEN ISLAND BLUEBELT PLAN.

LEGEND

- PA — PEDESTRIAN ACCESS STAIRS SEE SHEET C-509
- DTP — COMBINED TRUCK & PEDESTRIAN ACCESS RAMP, SEE SHEET C-510
- MVA — MAINTENANCE VEHICLE ACCESS RAMP, SEE SHEET C-510
- BA — BOARDWALK ACCESS SEE SHEET C-508
- DRAINAGE CONTROL STRUCTURE, SEE SHEET C-512
- SANITARY/DRAINAGE CONTROL STRUCTURE SEE SHEET C-514
- TG — TIDE GATE SEE SHEET C-513
- 30" SAN. -9.71 — SANITARY SEWER
- M x H STM — MAJOR STORM SEWER OUTFALL
- SAND COVER
- BOARDWALK SEE SHEET C-507
- PROMENADE SEE SHEET C-504

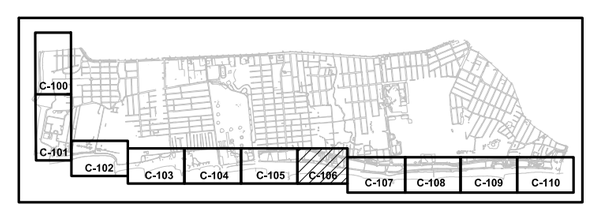

KEY PLAN

SCALE:1"=100'

FINAL JUNE 2016
NOT FOR CONSTRUCTION

US Army Corps of Engineers®

MARK	DESCRIPTION	DATE	APPR.
2	INCORPORATES SPONSOR AND STAKEHOLDER COMMENTS	3/21/2016	MAP
1	REVISIONS FOR AJR COMMENTS	1/9/2015	MAP

U.S. ARMY CORPS OF ENGINEERS
U.S. ARMY ENGINEER DISTRICT
NEW YORK
http://www.nan.usace.army.mil

MOFFATT & NICHOL
529 5th Avenue, 14th Floor
New York, New York 10017
212-768-7454

DESIGNED BY: MAP | DATE: 2016/03/11
DWN BY: DJMac | CKD BY: MAP | SOLICITATION NO.: XXXX
SUBMITTED BY: MARK PIRELLO | CONTRACT NO.: XXXX
PLOT SCALE: 1:100 | PLOT DATE: 6/2/2016 | FILE NUMBER: 1XXX
SIZE: ANSI D | FILE NAME: 698705C-106.dgn

COASTAL STORM RISK MANAGEMENT
FEASIBILITY STUDY FOR THE
SOUTH SHORE OF STATEN ISLAND

SITE PLAN (7 OF 11)

SHEET IDENTIFICATION
C-106
SHEET OF

PATH: Q:\TA\6987-05\cadd_Active_Preliminary\
FILE: 698705C-106.dgn
6/2/2016 3:11:12 PM
LAST PLOTTED BY: arsmith

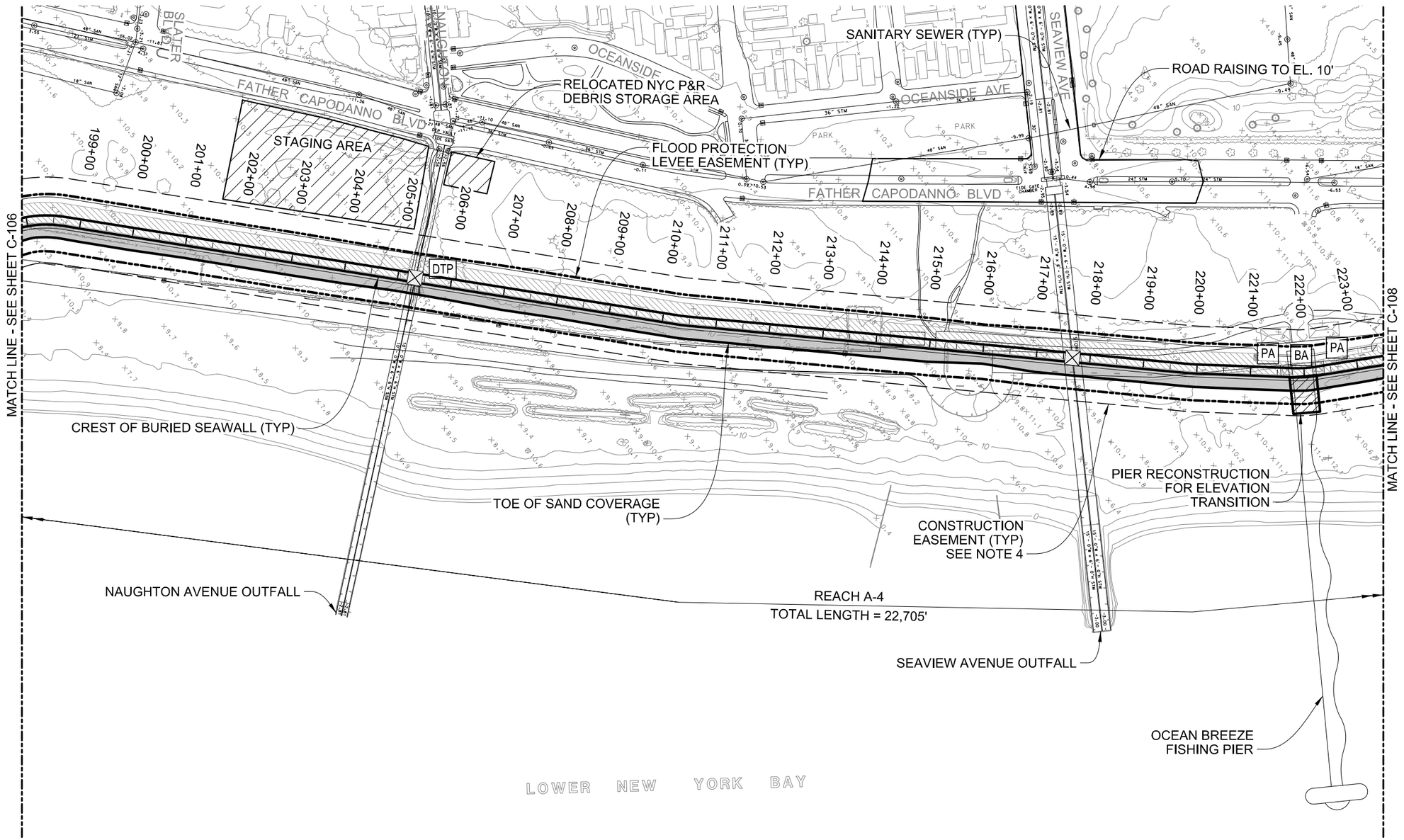

NOTES

1. TYPICAL SECTIONS SHOWN ON SHEETS C-501 TO C-507.
2. ALL ELEVATIONS REFERENCED TO NGVD 29.
3. STRUCTURE LIMITS SHOWN FOR LEVEL OF PROTECTION ARE BASED ON THE 15.6 FT SWL.
4. CONSTRUCTION EASEMENT LINE @ 50' OFFSET TO PROPOSED STRUCTURES.
5. CLOSURE STRUCTURE ON SHEETS C-515 & C-516.
6. SANITARY SERVICE ROAD SECTION SHOWN ON SHEET C-507.
7. THE LINE OF PROTECTION (LOP) STRUCTURES WITHIN THE OAKWOOD BEACH CORRIDOR HAVE BEEN DESIGNED TO ACCOMMODATE THE CITY OF NEW YORK'S STATEN ISLAND BLUEBELT PLAN.

LEGEND

- PA — PEDESTRIAN ACCESS STAIRS SEE SHEET C-509
- DTP — COMBINED TRUCK & PEDESTRIAN ACCESS RAMP, SEE SHEET C-510
- MVA — MAINTENANCE VEHICLE ACCESS RAMP, SEE SHEET C-510
- BA — BOARDWALK ACCESS SEE SHEET C-508
- DRAINAGE CONTROL STRUCTURE, SEE SHEET C-512
- SANITARY/DRAINAGE CONTROL STRUCTURE SEE SHEET C-514
- TG — TIDE GATE SEE SHEET C-513
- 30" SAN. -8.71 — SANITARY SEWER
- 8' x 11' STM — MAJOR STORM SEWER OUTFALL
- SAND COVER
- BOARDWALK SEE SHEET C-507
- PROMENADE SEE SHEET C-504

KEY PLAN

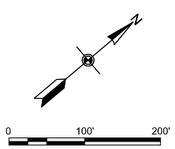

SCALE:1"=100'

FINAL JUNE 2016
NOT FOR CONSTRUCTION

US Army Corps of Engineers®

MARK	DESCRIPTION	DATE	APPR.
2	INCORPORATES SPONSOR AND STAKEHOLDER COMMENTS	3/21/2016	MAP
1	REVISIONS FOR AJR COMMENTS	1/9/2015	MAP

U.S. ARMY CORPS OF ENGINEERS
U.S. ARMY ENGINEER DISTRICT
NEW YORK
http://www.nan.usace.army.mil

MOFFATT & NICHOL
529 5th Avenue, 14th Floor
New York, New York 10017
212-768-7454

DESIGNED BY: MAP | DATE: 20160/3/11
DWN BY: | CKD BY: MAP | SOLICITATION NO.: XXXX
SUBMITTED BY: | CONTRACT NO.: XXXX
PLOT SCALE: 1:100 | PLOT DATE: 6/2/2016 | FILE NUMBER:
SIZE: ANSI D | FILE NAME: 698705C-107.dgn

COASTAL STORM RISK MANAGEMENT FEASIBILITY STUDY FOR THE SOUTH SHORE OF STATEN ISLAND

SITE PLAN (8 OF 11)

SHEET IDENTIFICATION
C-107
SHEET OF

PATH: Q:\TA\6987-05\cadd_Active_Preliminary\
FILE: 698705C-107.dgn
6/2/2016 3:11:52 PM
LAST PLOTTED BY: arsmith

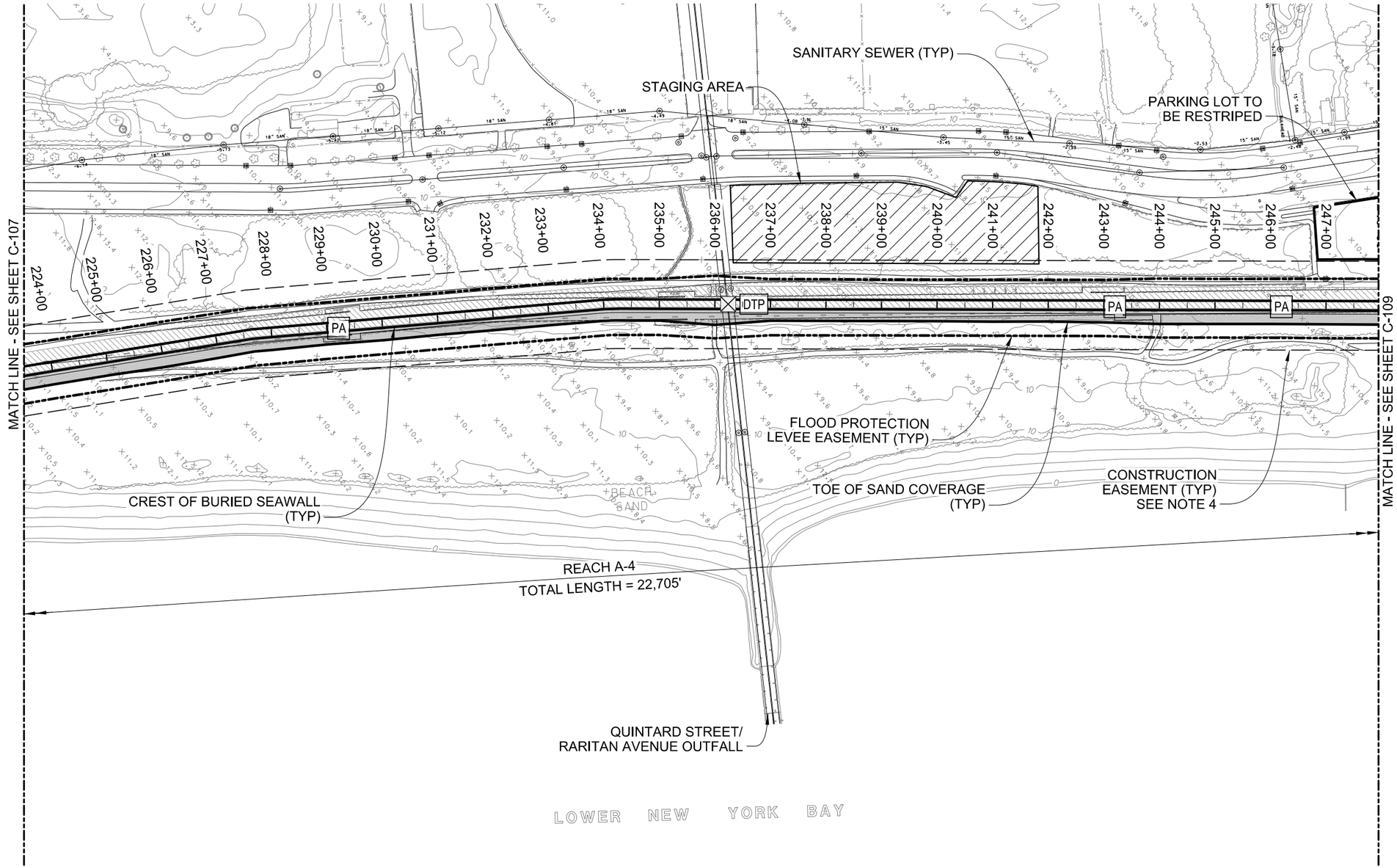

NOTES

1. TYPICAL SECTIONS SHOWN ON SHEETS C-501 TO C-507.
2. ALL ELEVATIONS REFERENCED TO NGVD 29.
3. STRUCTURE LIMITS SHOWN FOR LEVEL OF PROTECTION ARE BASED ON THE 15.6 FT SWL.
4. CONSTRUCTION EASEMENT LINE @ 50' OFFSET TO PROPOSED STRUCTURES.
5. CLOSURE STRUCTURE ON SHEETS C-515 & C-516.
6. SANITARY SERVICE ROAD SECTION SHOWN ON SHEET C-507.
7. THE LINE OF PROTECTION (LOP) STRUCTURES WITHIN THE OAKWOOD BEACH CORRIDOR HAVE BEEN DESIGNED TO ACCOMMODATE THE CITY OF NEW YORK'S STATEN ISLAND BLUEBELT PLAN.

FINAL JUNE 2016
NOT FOR CONSTRUCTION

LEGEND

- PA — PEDESTRIAN ACCESS STAIRS SEE SHEET C-509
- DTP — COMBINED TRUCK & PEDESTRIAN ACCESS RAMP, SEE SHEET C-510
- MVA — MAINTENANCE VEHICLE ACCESS RAMP, SEE SHEET C-510
- BA — BOARDWALK ACCESS SEE SHEET C-508
- DRAINAGE CONTROL STRUCTURE, SEE SHEET C-512
- SANITARY/DRAINAGE CONTROL STRUCTURE SEE SHEET C-514
- TG — TIDE GATE SEE SHEET C-513
- 30" SAN. -8.71 — SANITARY SEWER
- 8' x 8' STM — MAJOR STORM SEWER OUTFALL
- SAND COVER
- BOARDWALK SEE SHEET C-507
- PROMENADE SEE SHEET C-504

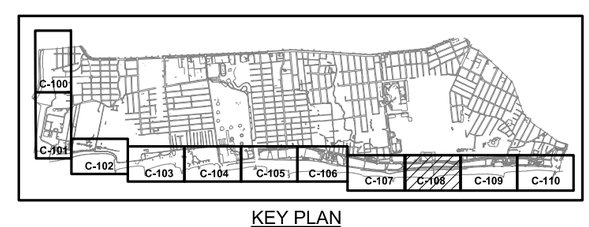

KEY PLAN

0 100' 200'
SCALE:1"=100'

US Army Corps of Engineers®

MARK	DESCRIPTION	DATE	APPR.
2	INCORPORATES SPONSOR AND STAKEHOLDER COMMENTS	3/21/2016	MAP
1	REVISIONS FOR AJR COMMENTS	1/9/2015	MAP

U.S. ARMY CORPS OF ENGINEERS
U.S. ARMY ENGINEER DISTRICT
NEW YORK
http://www.nan.usace.army.mil

MOFFATT & NICHOL
529 5th Avenue, 14th Floor
New York, New York 10017
212-768-7454

DESIGNED BY: MAP
DWN BY: DJMac
CKD BY: MAP
SUBMITTED BY: MARK PIRELLO
PLOT SCALE: 1:200
PLOT DATE: 6/2/2016
SIZE: ANSI D
FILE NAME: 698705C-108.dgn
DATE: 2016/03/11
SOLICITATION NO.: XXXX
CONTRACT NO.: XXXX
FILE NUMBER: XXXX

COASTAL STORM RISK MANAGEMENT
FEASIBILITY STUDY FOR THE
SOUTH SHORE OF STATEN ISLAND

SITE PLAN (9 OF 11)

SHEET IDENTIFICATION
C-108
SHEET OF

PATH: Q:\TA\6987-05\cadd_Active_Preliminary\
FILE: 698705C-108.dgn
6/2/2016 3:12:33 PM
LAST PLOTTED BY: arsmith

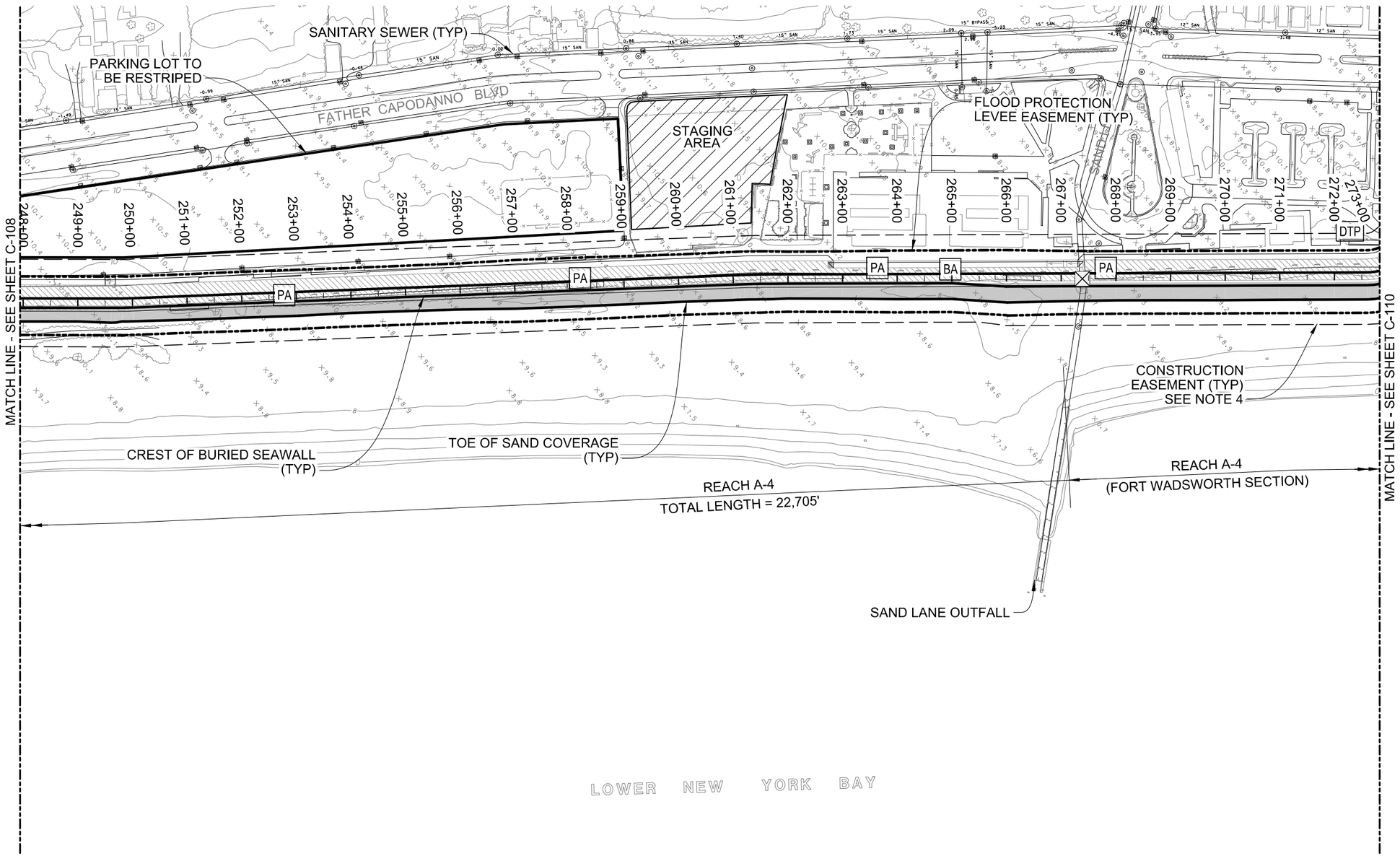

NOTES

1. TYPICAL SECTIONS SHOWN ON SHEETS C-501 TO C-507.
2. ALL ELEVATIONS REFERENCED TO NGVD 29.
3. STRUCTURE LIMITS SHOWN FOR LEVEL OF PROTECTION ARE BASED ON THE 15.6 FT SWL.
4. CONSTRUCTION EASEMENT LINE @ 50' OFFSET TO PROPOSED STRUCTURES.
5. CLOSURE STRUCTURE ON SHEETS C-515 & C-516.
6. SANITARY SERVICE ROAD SECTION SHOWN ON SHEET C-507.
7. THE LINE OF PROTECTION (LOP) STRUCTURES WITHIN THE OAKWOOD BEACH CORRIDOR HAVE BEEN DESIGNED TO ACCOMMODATE THE CITY OF NEW YORK'S STATEN ISLAND BLUEBELT PLAN.

LEGEND

- PA — PEDESTRIAN ACCESS STAIRS SEE SHEET C-509
- DTP — COMBINED TRUCK & PEDESTRIAN ACCESS RAMP, SEE SHEET C-510
- MVA — MAINTENANCE VEHICLE ACCESS RAMP, SEE SHEET C-510
- BA — BOARDWALK ACCESS SEE SHEET C-508
- DRAINAGE CONTROL STRUCTURE, SEE SHEET C-512
- SANITARY/DRAINAGE CONTROL STRUCTURE SEE SHEET C-514
- TG — TIDE GATE SEE SHEET C-513
- 50" SAN. -8.71 — SANITARY SEWER
- 36" H STM — MAJOR STORM SEWER OUTFALL
- SAND COVER
- BOARDWALK SEE SHEET C-507
- PROMENADE SEE SHEET C-504

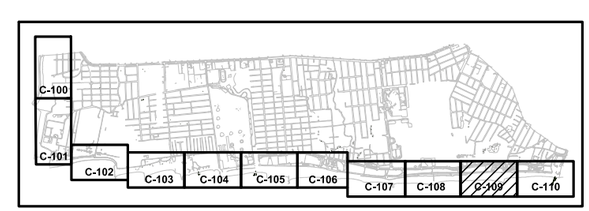

KEY PLAN

0 100' 200'

SCALE:1"=100'

FINAL JUNE 2016
NOT FOR CONSTRUCTION

US Army Corps of Engineers®

MARK	DESCRIPTION	DATE	APPR.
2	INCORPORATES SPONSOR AND STAKEHOLDER COMMENTS	3/21/2016	MAP
1	REVISIONS FOR AJR COMMENTS	1/9/2015	MAP

U.S. ARMY CORPS OF ENGINEERS
U.S. ARMY ENGINEER DISTRICT
NEW YORK
http://www.nan.usace.army.mil

MOFFATT & NICHOL
529 5th Avenue, 14th Floor
New York, New York 10017
212-768-7454

DESIGNED BY: MAP | DATE: 2016/03/11
DWN BY: DJMac | CKD BY: MAP | SOLICITATION NO.: XXXX
SUBMITTED BY: MARK PIRELLO | CONTRACT NO.: XXXX
PLOT SCALE: 1:1000 | PLOT DATE: 6/2/2016 | FILE NUMBER: XXXX
SIZE: ANSI D | FILE NAME: 698705C-109.dgn

COASTAL STORM RISK MANAGEMENT
FEASIBILITY STUDY FOR THE
SOUTH SHORE OF STATEN ISLAND

SITE PLAN (10 OF 11)

SHEET IDENTIFICATION
C-109
SHEET OF

PATH: Q:\TA\6987-05\cadd_Active_Preliminary\
FILE: 698705C-109.dgn
6/2/2016 3:13:13 PM
LAST PLOTTED BY: arsmith

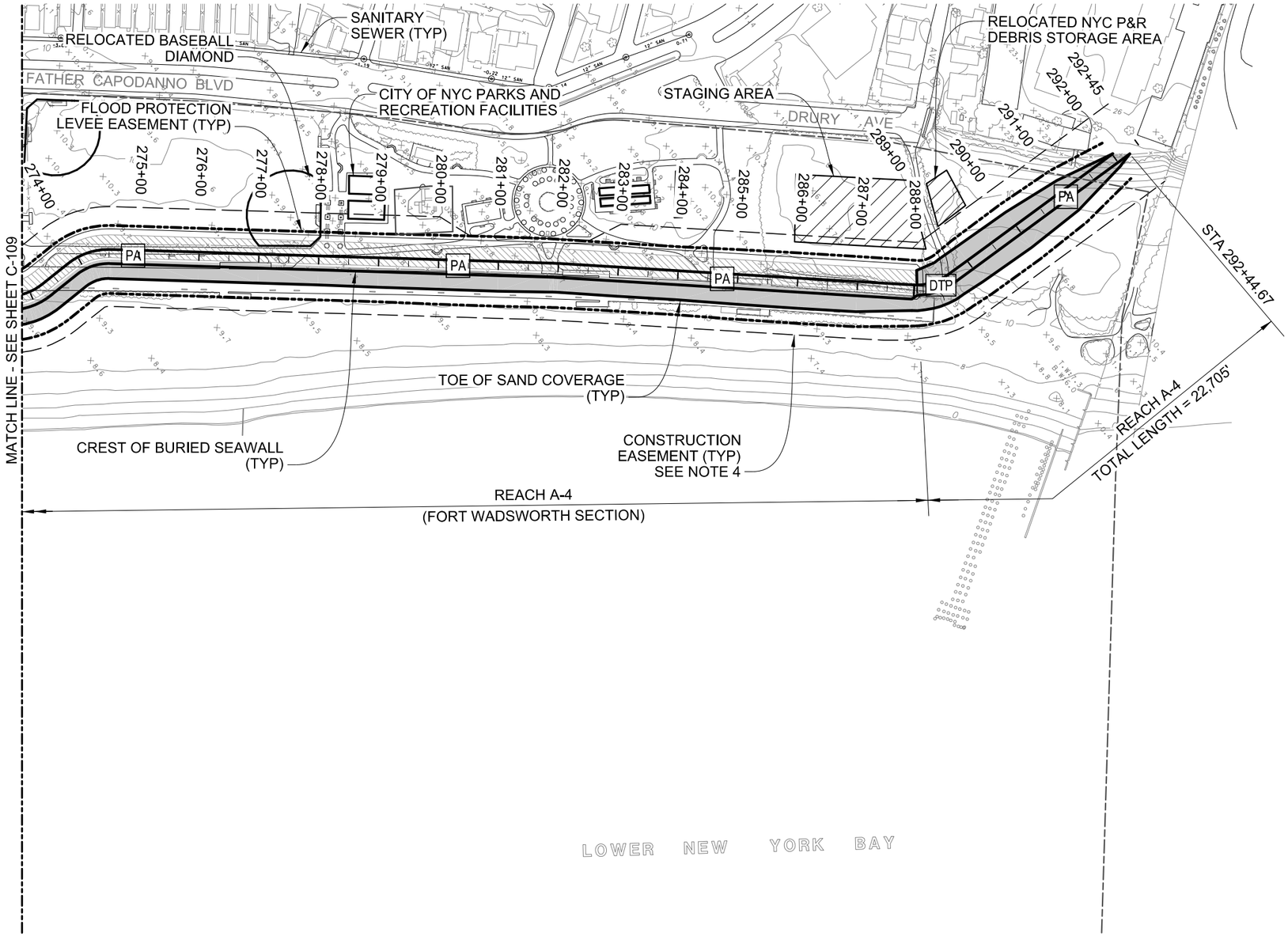

NOTES

1. TYPICAL SECTIONS SHOWN ON SHEETS C-501 TO C-507.
2. ALL ELEVATIONS REFERENCED TO NGVD 29.
3. STRUCTURE LIMITS SHOWN FOR LEVEL OF PROTECTION ARE BASED ON THE 15.6 FT SWL.
4. CONSTRUCTION EASEMENT LINE @ 50' OFFSET TO PROPOSED STRUCTURES.
5. CLOSURE STRUCTURE ON SHEETS C-515 & C-516.
6. SANITARY SERVICE ROAD SECTION SHOWN ON SHEET C-507.
7. THE LINE OF PROTECTION (LOP) STRUCTURES WITHIN THE OAKWOOD BEACH CORRIDOR HAVE BEEN DESIGNED TO ACCOMMODATE THE CITY OF NEW YORK'S STATEN ISLAND BLUEBELT PLAN.

LEGEND

- PA — PEDESTRIAN ACCESS STAIRS SEE SHEET C-509
- DTP — COMBINED TRUCK & PEDESTRIAN ACCESS RAMP, SEE SHEET C-510
- MVA — MAINTENANCE VEHICLE ACCESS RAMP, SEE SHEET C-510
- BA — BOARDWALK ACCESS SEE SHEET C-508
- DRAINAGE CONTROL STRUCTURE, SEE SHEET C-512
- SANITARY/DRAINAGE CONTROL STRUCTURE SEE SHEET C-514
- TG — TIDE GATE SEE SHEET C-513
- 30" SAN. -6.71 — SANITARY SEWER
- 8' x 8' STM — MAJOR STORM SEWER OUTFALL
- SAND COVER
- BOARDWALK SEE SHEET C-507
- PROMENADE SEE SHEET C-504

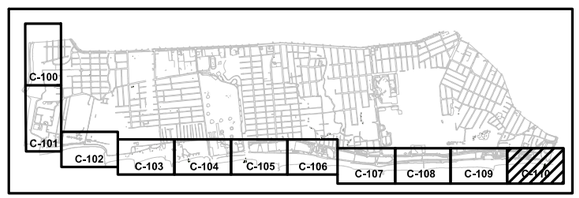

KEY PLAN

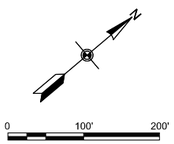

SCALE:1"=100'

FINAL JUNE 2016
NOT FOR CONSTRUCTION

US Army Corps of Engineers®

MARK	DESCRIPTION	DATE	APPR.
2	INCORPORATES SPONSOR AND STAKEHOLDER COMMENTS	3/21/2016	MAP
1	REVISIONS FOR AJR COMMENTS	1/9/2015	MAP

U.S. ARMY CORPS OF ENGINEERS
U.S. ARMY ENGINEER DISTRICT
NEW YORK
http://www.nan.usace.army.mil

MOFFATT & NICHOL
529 5th Avenue, 14th Floor
New York, New York 10017
212-768-7454

DESIGNED BY: MAP
DWN BY: DJMac
CKD BY: MAP
SUBMITTED BY: MARK PIRELLO
PLOT SCALE: 1:100
PLOT DATE: 6/2/2016
SIZE: ANSI D
FILE NAME: 698705C-110.dgn
DATE: 2016/03/11
SOLICITATION NO.: XXXX
CONTRACT NO.: XXXX
FILE NUMBER: XXXX

COASTAL STORM RISK MANAGEMENT
FEASIBILITY STUDY FOR THE
SOUTH SHORE OF STATEN ISLAND

SITE PLAN (11 OF 11)

SHEET IDENTIFICATION
C-110
SHEET OF

PATH: Q:\TA\6987-05\cadd_Active_Preliminary\
FILE: 698705C-110.dgn
6/2/2016 3:13:55 PM
LAST PLOTTED BY: arsmith

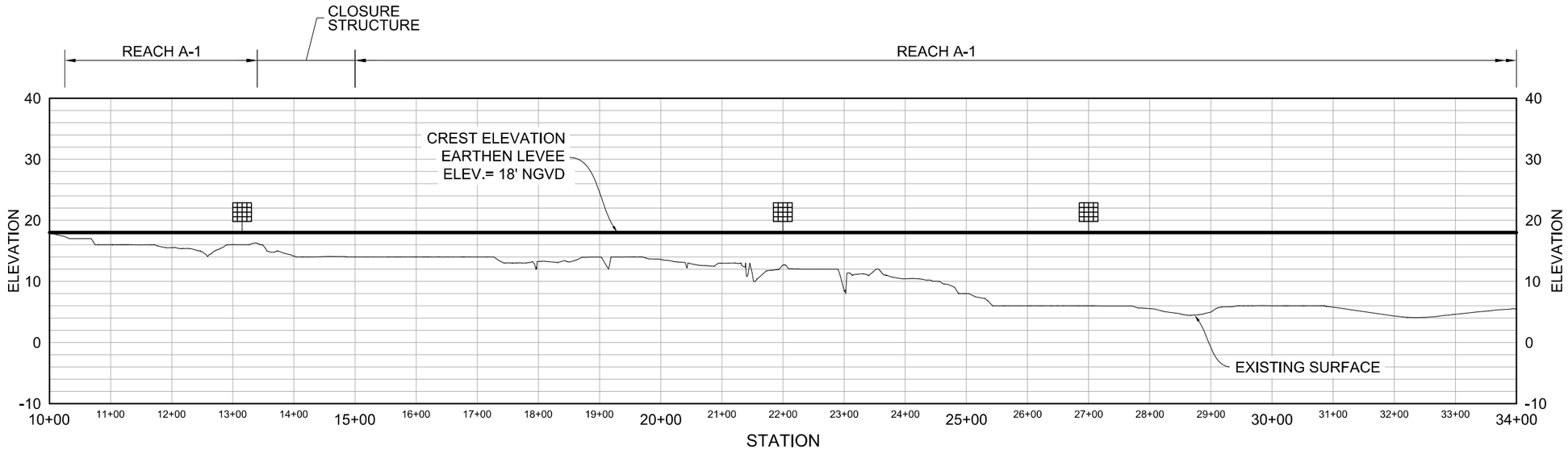

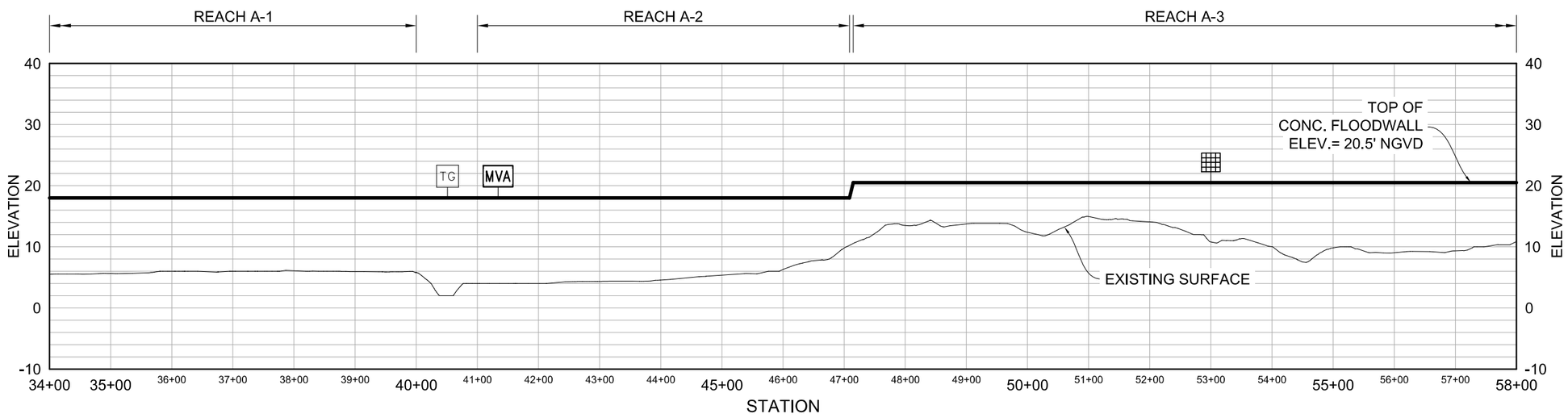

NOTE

1. TYPICAL SECTIONS SHOWN ON C-501 TO C-507.
2. ALL ELEVATIONS REFERENCED TO NGVD 29.
3. PROFILES FOR 15.6 FT SWL CALCULATED ALONG BASELINE. REFER TO SITE PLANS FOR BASELINE LOCATION.
4. CLOSURE STRUCTURE ON SHEETS C-515 & C-516.

LEGEND

- PA — PEDESTRIAN ACCESS STAIRS SEE SHEET C-509
- DTP — COMBINED TRUCK & PEDESTRIAN ACCESS RAMP, SEE SHEET C-510
- MVA — MAINTENANCE VEHICLE ACCESS RAMP, SEE SHEET C-510
- BA — BOARDWALK ACCESS SEE SHEET C-508
- DRAINAGE CONTROL STRUCTURE, SEE SHEET C-512
- SANITARY/DRAINAGE CONTROL STRUCTURE SEE SHEET C-514
- TG — TIDE GATE SEE SHEET C-513

FINAL JUNE 2016
NOT FOR CONSTRUCTION

0 100' 200'
SCALE:1"=100'
VERT EXAG 10:1

US Army Corps of Engineers®

MARK	DESCRIPTION	DATE	APPR.
2	INCORPORATES SPONSOR AND STAKEHOLDER COMMENTS	3/21/2016	MAP
1	REVISIONS FOR AJR COMMENTS	1/9/2015	MAP

U.S. ARMY CORPS OF ENGINEERS
U.S. ARMY ENGINEER DISTRICT
NEW YORK
http://www.nan.usace.army.mil

MOFFATT & NICHOL
529 5th Avenue, 14th Floor
New York, New York 10017
212-768-7454

DESIGNED BY: MAP
DWN BY: DJMac
CKD BY: MAP
SUBMITTED BY: MARK PIELLO
PLOT SCALE: 1:100
PLOT DATE: 6/2/2016
SIZE: ANSI D
FILE NAME: 698705C-301.dgn
DATE: 2016/03/11
SOLICITATION NO.: XXXX
CONTRACT NO.: XXXX
FILE NUMBER: XXXX

COASTAL STORM RISK MANAGEMENT
FEASIBILITY STUDY FOR THE
SOUTH SHORE OF STATEN ISLAND

SITE PROFILE (1 OF 6)

SHEET IDENTIFICATION
C-301
SHEET OF

LAST PLOTTED BY: arsmith 3:13:57 PM 6/2/2016 FILE: 698705C-301.dgn PATH: Q:\TA\6987-05\cadd_Active_Preliminary\

LAST SAVED BY: JMACPHERSON, 1/31/2011 1:30:33 PM

SEE SHEET C-301 FOR CONTINUATION

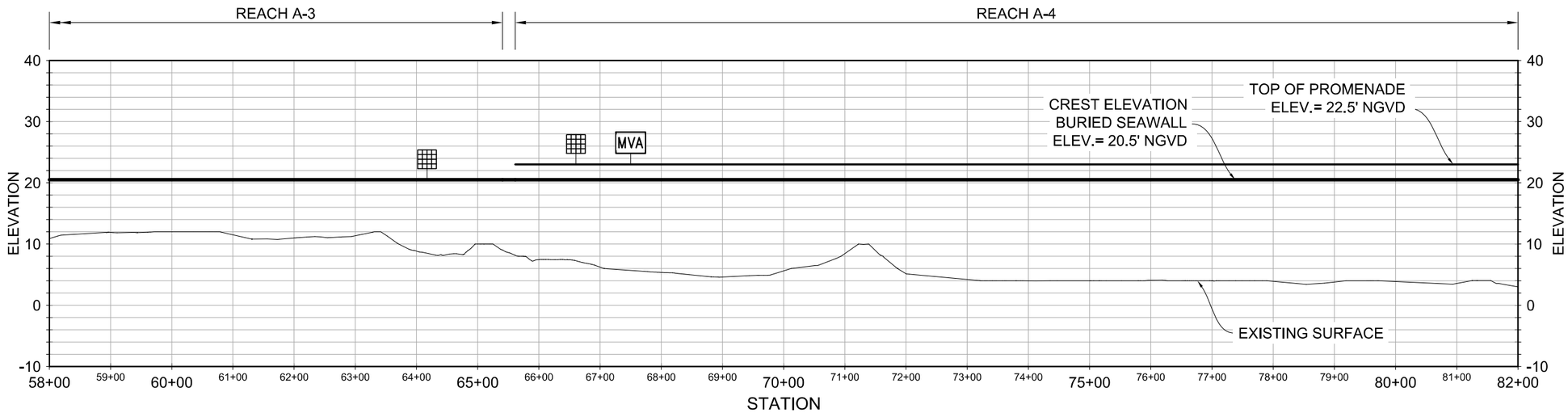

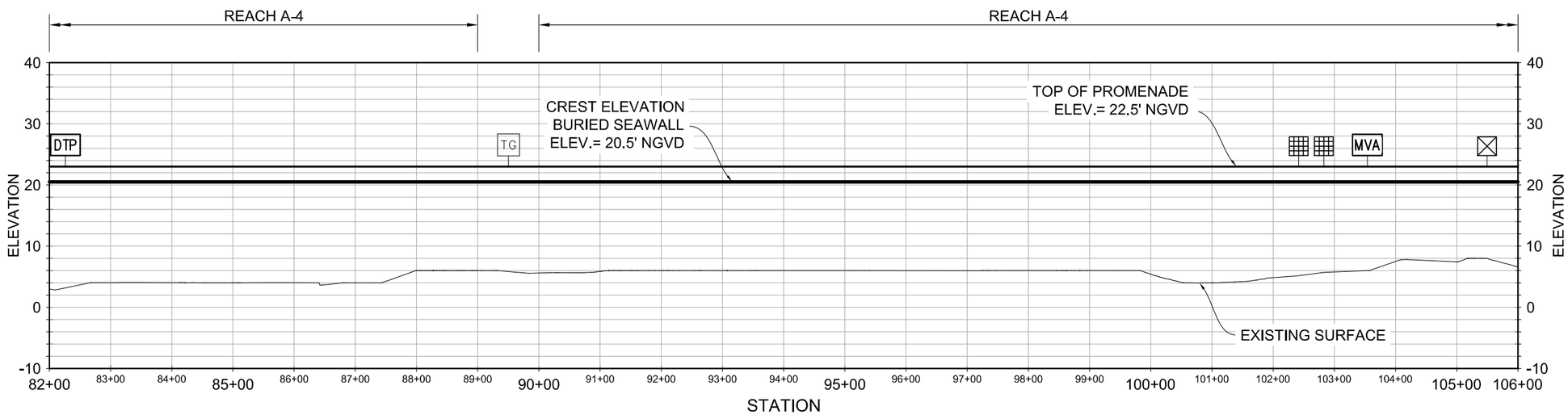

NOTE

1. TYPICAL SECTIONS SHOWN ON C-501 TO C-507.
2. ALL ELEVATIONS REFERENCED TO NGVD 29.
3. PROFILES FOR 15.6 FT SWL CALCULATED ALONG BASELINE. REFER TO SITE PLANS FOR BASELINE LOCATION.

SEE SHEET C-303 FOR CONTINUATION

LEGEND

- PA — PEDESTRIAN ACCESS STAIRS SEE SHEET C-509
- DTP — COMBINED TRUCK & PEDESTRIAN ACCESS RAMP, SEE SHEET C-510
- MVA — MAINTENANCE VEHICLE ACCESS RAMP, SEE SHEET C-510
- BA — BOARDWALK ACCESS SEE SHEET C-508
- DRAINAGE CONTROL STRUCTURE, SEE SHEET C-512
- SANITARY/DRAINAGE CONTROL STRUCTURE SEE SHEET C-514
- TG — TIDE GATE SEE SHEET C-513

0 100' 200'
SCALE:1"=100'
VERT EXAG 10:1

FINAL JUNE 2016
NOT FOR CONSTRUCTION

US Army Corps of Engineers®

MARK	DESCRIPTION	DATE	APPR.
2	INCORPORATES SPONSOR AND STAKEHOLDER COMMENTS	3/21/2016	MAP
1	REVISIONS FOR AJR COMMENTS	1/9/2015	MAP

U.S. ARMY CORPS OF ENGINEERS
U.S. ARMY ENGINEER DISTRICT
NEW YORK
http://www.nan.usace.army.mil
MOFFATT & NICHOL
529 5th Avenue, 14th Floor
New York, New York 10017
212-768-7454

DESIGNED BY: MAP
DWN BY: DJMac
CKD BY: MAP
SUBMITTED BY: MARK PIELLO
PLOT SCALE: 1:100
PLOT DATE: 6/2/2016
DATE: 2016/03/11
SOLICITATION NO.: XXXX
CONTRACT NO.: XXXX
FILE NUMBER: XXXX
SIZE: ANSI D
FILE NAME: 698705C-302.dgn

COASTAL STORM RISK MANAGEMENT
FEASIBILITY STUDY FOR THE
SOUTH SHORE OF STATEN ISLAND

SITE PROFILE (2 OF 6)

SHEET IDENTIFICATION
C-302
SHEET OF

PATH: Q:\TA\6987-05\cadd_Active_Preliminary\
FILE: 698705C-302.dgn
6/2/2016 3:13:57 PM
LAST PLOTTED BY: arsmith
LAST SAVED BY: JMACPHERSON, 1/31/2011 1:30:33 PM

SEE SHEET C-302 FOR CONTINUATION

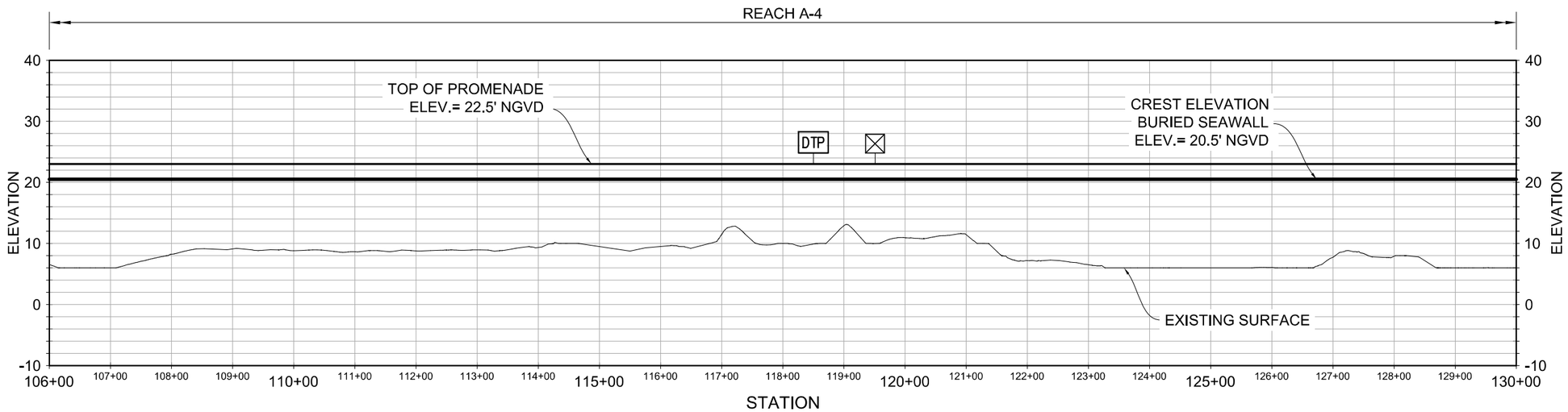

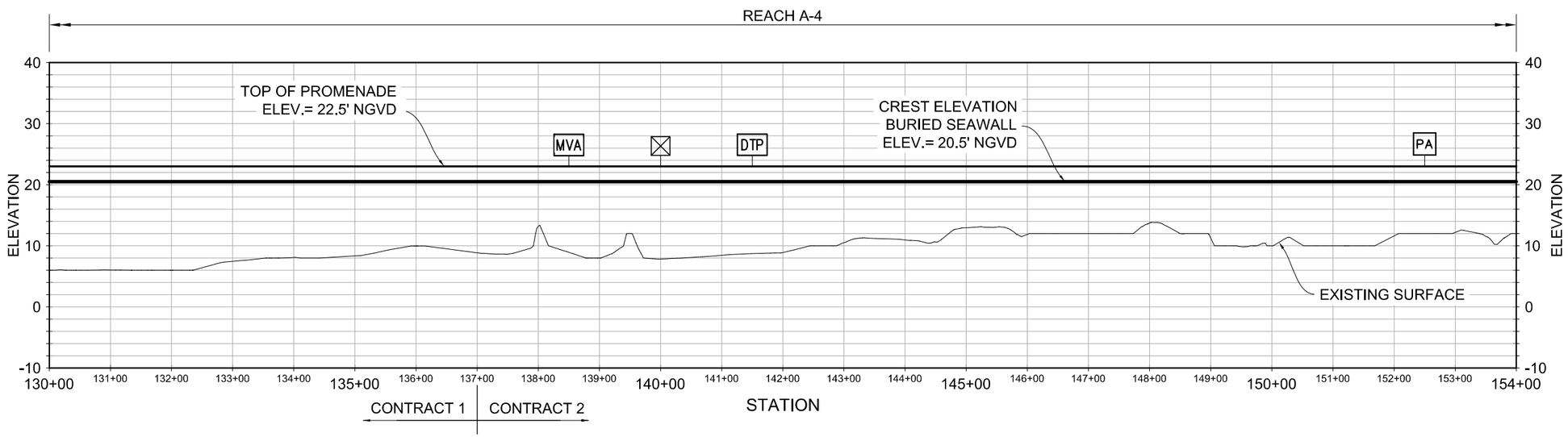

SEE SHEET C-304 FOR CONTINUATION

NOTE

1. TYPICAL SECTIONS SHOWN ON C-501 TO C-507.
2. ALL ELEVATIONS REFERENCED TO NGVD 29.
3. PROFILES FOR 15.6 FT SWL CALCULATED ALONG BASELINE. REFER TO SITE PLANS FOR BASELINE LOCATION.

LEGEND

- PA — PEDESTRIAN ACCESS STAIRS SEE SHEET C-509
- DTP — COMBINED TRUCK & PEDESTRIAN ACCESS RAMP, SEE SHEET C-510
- MVA — MAINTENANCE VEHICLE ACCESS RAMP, SEE SHEET C-510
- BA — BOARDWALK ACCESS SEE SHEET C-508
- DRAINAGE CONTROL STRUCTURE, SEE SHEET C-512
- SANITARY/DRAINAGE CONTROL STRUCTURE SEE SHEET C-514
- TG — TIDE GATE SEE SHEET C-513

0 100' 200'
SCALE:1"=100'
VERT EXAG 10:1

FINAL JUNE 2016
NOT FOR CONSTRUCTION

US Army Corps of Engineers®

MARK	DESCRIPTION	DATE	APPR.
2	INCORPORATES SPONSOR AND STAKEHOLDER COMMENTS	3/21/2016	MAP
1	REVISIONS FOR AJR COMMENTS	1/9/2015	MAP

U.S. ARMY CORPS OF ENGINEERS
U.S. ARMY ENGINEER DISTRICT
NEW YORK
http://www.nan.usace.army.mil

MOFFATT & NICHOL
529 5th Avenue, 14th Floor
New York, New York 10017
212-768-7454

DESIGNED BY: MAP
DWN BY: DJMac
CKD BY: MAP
SUBMITTED BY: MARK PIELLO
DATE: 2016/03/11
SOLICITATION NO.: XXXX
CONTRACT NO.: XXXX
PLOT SCALE: 1:100
PLOT DATE: 6/2/2016
FILE NUMBER: XXXX
SIZE: ANSI D
FILE NAME: 698705C-303.dgn

COASTAL STORM RISK MANAGEMENT
FEASIBILITY STUDY FOR THE
SOUTH SHORE OF STATEN ISLAND

SITE PROFILE (3 OF 6)

SHEET IDENTIFICATION
C-303
SHEET OF

LAST PLOTTED BY: arsmith 6/2/2016 3:13:58 PM
PATH: Q:\TA\6987-05\cadd_Active_Preliminary\
FILE: 698705C-303.dgn
LAST SAVED BY: JMACPHERSON, 1/31/2011 1:30:33 PM

SEE SHEET C-303 FOR CONTINUATION

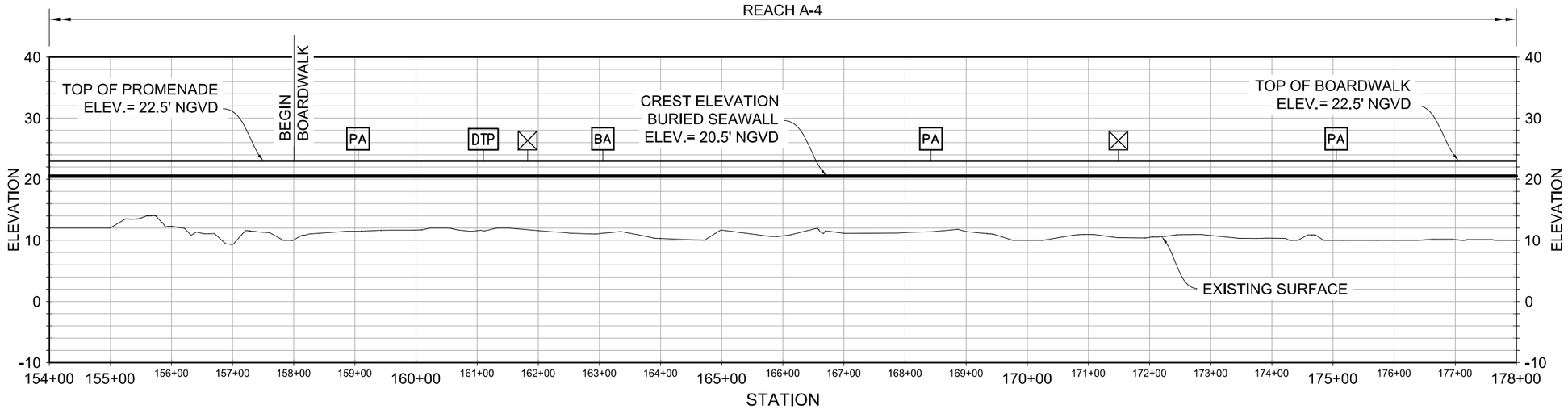

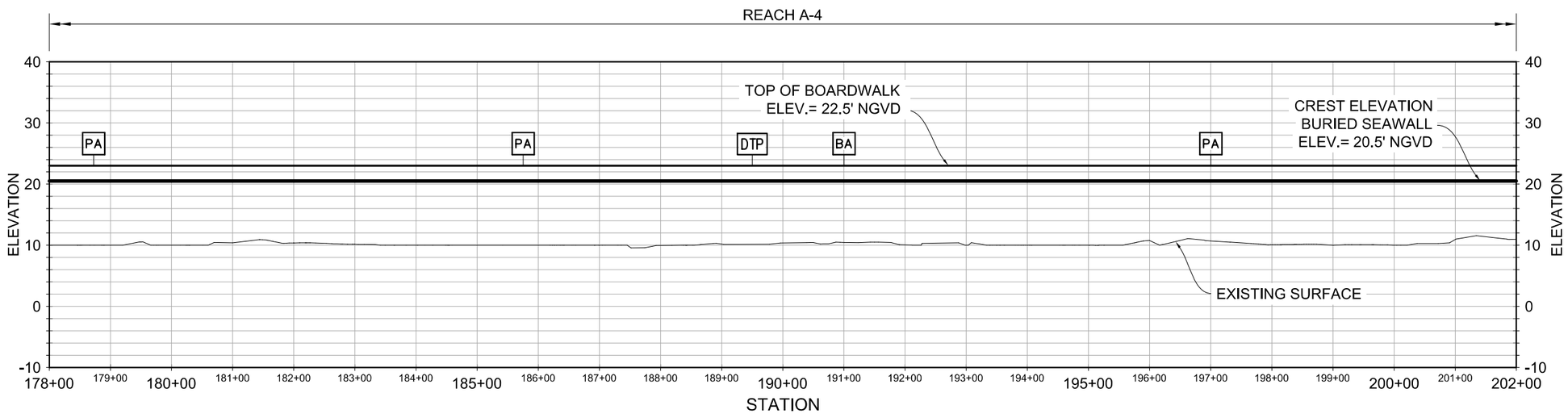

SEE SHEET C-305 FOR CONTINUATION

NOTE

1. TYPICAL SECTIONS SHOWN ON C-501 TO C-507.
2. ALL ELEVATIONS REFERENCED TO NGVD 29.
3. PROFILES FOR 15.6 FT SWL CALCULATED ALONG BASELINE. REFER TO SITE PLANS FOR BASELINE LOCATION.

LEGEND

- PA — PEDESTRIAN ACCESS STAIRS SEE SHEET C-509
- DTP — COMBINED TRUCK & PEDESTRIAN ACCESS RAMP, SEE SHEET C-510
- MVA — MAINTENANCE VEHICLE ACCESS RAMP, SEE SHEET C-510
- BA — BOARDWALK ACCESS SEE SHEET C-508
- DRAINAGE CONTROL STRUCTURE, SEE SHEET C-512
- SANITARY/DRAINAGE CONTROL STRUCTURE SEE SHEET C-514
- TG — TIDE GATE SEE SHEET C-513

0 100' 200'
SCALE:1"=100'
VERT EXAG 10:1

FINAL JUNE 2016
NOT FOR CONSTRUCTION

US Army Corps of Engineers®

MARK	DESCRIPTION	DATE	APPR.
2	INCORPORATES SPONSOR AND STAKEHOLDER COMMENTS	3/21/2016	MAP
1	REVISIONS FOR AJR COMMENTS	1/9/2015	MAP

U.S. ARMY CORPS OF ENGINEERS
U.S. ARMY ENGINEER DISTRICT
NEW YORK
http://www.nan.usace.army.mil

MOFFATT & NICHOL
529 5th Avenue, 14th Floor
New York, New York 10017
212-768-7454

DESIGNED BY: MAP
DWN BY: DJMac
CKD BY: MAP
SUBMITTED BY: MARK PIELLO
PLOT SCALE: 1:100
PLOT DATE: 6/2/2016
SIZE: ANSI D
FILE NAME: 698705C-304.dgn
DATE: 2016/03/11
SOLICITATION NO.: XXXX
CONTRACT NO.: XXXX
FILE NUMBER: XXXX

COASTAL STORM RISK MANAGEMENT
FEASIBILITY STUDY FOR THE
SOUTH SHORE OF STATEN ISLAND

SITE PROFILE (4 OF 6)

SHEET IDENTIFICATION
C-304
SHEET OF

PATH: Q:\TA\6987-05\cadd_Active_Preliminary\
FILE: 698705C-304.dgn
LAST PLOTTED BY: arsmith 6/2/2016 3:13:58 PM
LAST SAVED BY: JMACPHERSON, 1/31/2011 1:30:33 PM

SEE SHEET C-304 FOR CONTINUATION

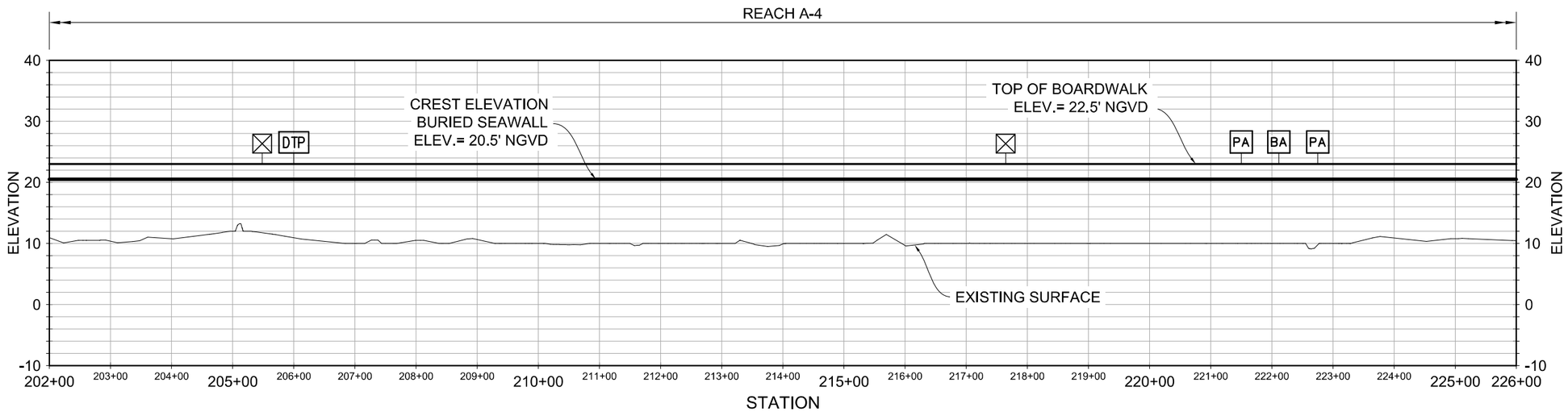

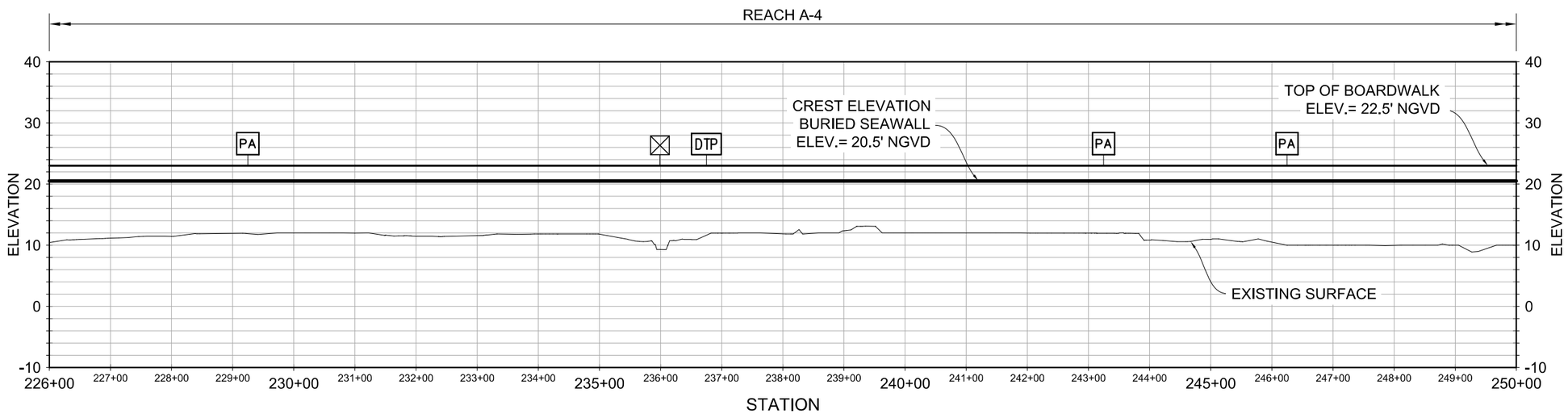

NOTE

1. TYPICAL SECTIONS SHOWN ON C-501 TO C-507.
2. ALL ELEVATIONS REFERENCED TO NGVD 29.
3. PROFILES FOR 15.6 FT SWL CALCULATED ALONG BASELINE. REFER TO SITE PLANS FOR BASELINE LOCATION.

SEE SHEET C-306 FOR CONTINUATION

LEGEND

- PA — PEDESTRIAN ACCESS STAIRS SEE SHEET C-509
- DTP — COMBINED TRUCK & PEDESTRIAN ACCESS RAMP, SEE SHEET C-510
- MVA — MAINTENANCE VEHICLE ACCESS RAMP, SEE SHEET C-510
- BA — BOARDWALK ACCESS SEE SHEET C-508
- DRAINAGE CONTROL STRUCTURE, SEE SHEET C-512
- SANITARY/DRAINAGE CONTROL STRUCTURE SEE SHEET C-514
- TG — TIDE GATE SEE SHEET C-513

0 100' 200'
SCALE:1"=100'
VERT EXAG 10:1

FINAL JUNE 2016
NOT FOR CONSTRUCTION

US Army Corps of Engineers®

MARK	DESCRIPTION	DATE	APPR.
2	INCORPORATES SPONSOR AND STAKEHOLDER COMMENTS	3/21/2016	MAP
1	REVISIONS FOR AJR COMMENTS	1/9/2015	MAP

U.S. ARMY CORPS OF ENGINEERS
U.S. ARMY ENGINEER DISTRICT
NEW YORK
http://www.nan.usace.army.mil

MOFFATT & NICHOL
529 5th Avenue, 14th Floor
New York, New York 10017
212-768-7454

DESIGNED BY: MAP
DWN BY: DJMac
CKD BY: MAP
SUBMITTED BY: MARK PIELLO
PLOT SCALE: 1:100
PLOT DATE: 6/2/2016
SIZE: ANSI D
FILE NAME: 698705C-305.dgn
DATE: 2016/03/11
SOLICITATION NO.: XXXX
CONTRACT NO.: XXXX
FILE NUMBER: XXXX

COASTAL STORM RISK MANAGEMENT
FEASIBILITY STUDY FOR THE
SOUTH SHORE OF STATEN ISLAND

SITE PROFILE (5 OF 6)

SHEET IDENTIFICATION
C-305
SHEET OF

PATH: Q:\TA\6987-05\cadd_Active_Preliminary\
FILE: 698705C-305.dgn
LAST PLOTTED BY: arsmith 6/2/2016 3:13:59 PM
LAST SAVED BY: JMACPHERSON, 1/31/2011 1:30:33 PM

SEE SHEET C-305 FOR CONTINUATION

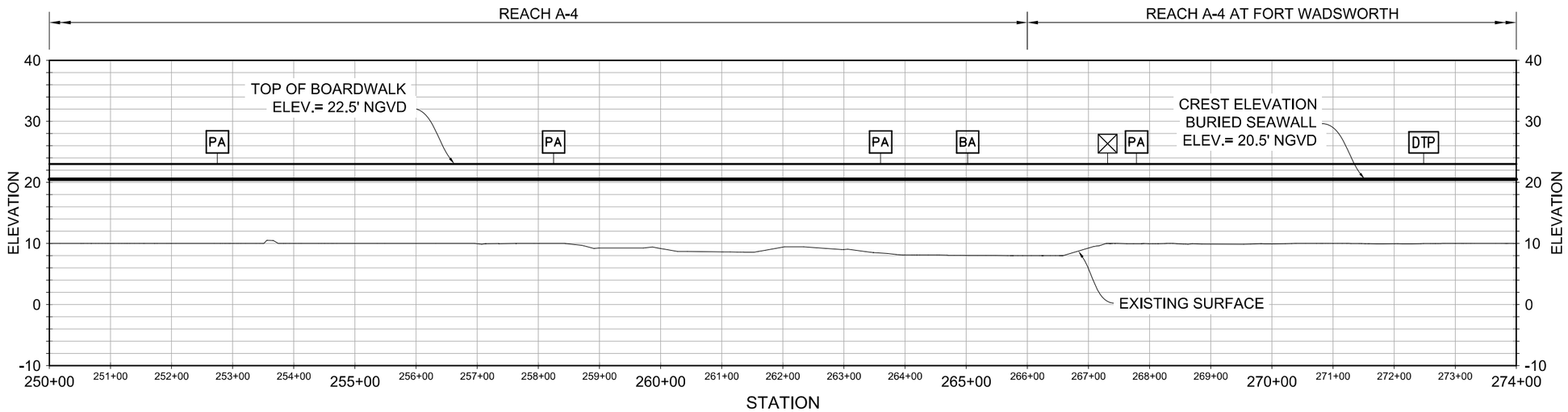

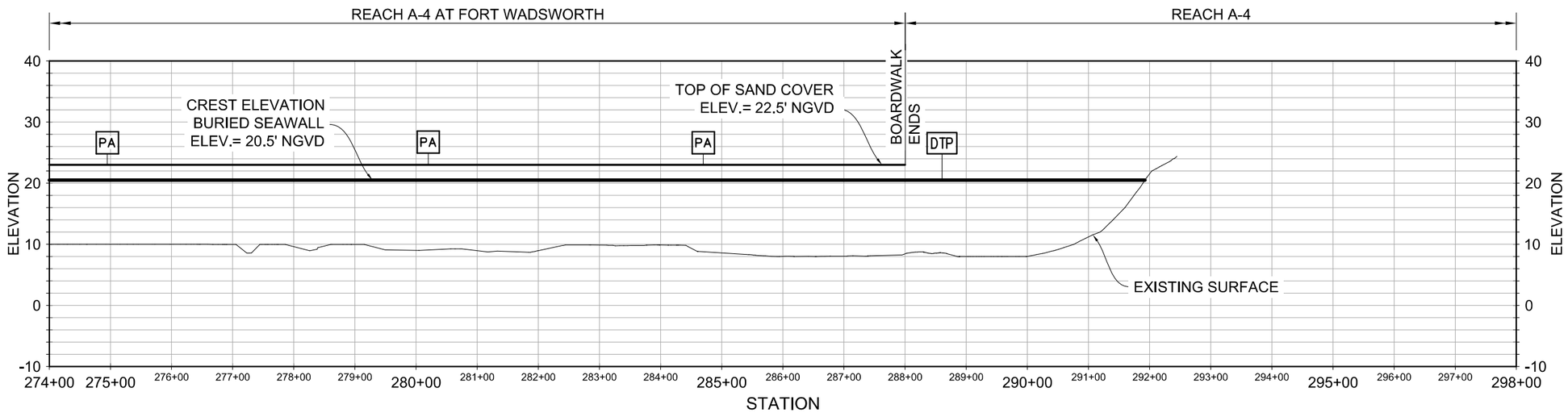

NOTE

1. TYPICAL SECTIONS SHOWN ON C-501 TO C-507.
2. ALL ELEVATIONS REFERENCED TO NGVD 29.
3. PROFILES FOR 15.6 FT SWL CALCULATED ALONG BASELINE. REFER TO SITE PLANS FOR BASELINE LOCATION.

LEGEND

- PA — PEDESTRIAN ACCESS STAIRS SEE SHEET C-509
- DTP — COMBINED TRUCK & PEDESTRIAN ACCESS RAMP, SEE SHEET C-510
- MVA — MAINTENANCE VEHICLE ACCESS RAMP, SEE SHEET C-510
- BA — BOARDWALK ACCESS SEE SHEET C-508
- DRAINAGE CONTROL STRUCTURE, SEE SHEET C-512
- SANITARY/DRAINAGE CONTROL STRUCTURE SEE SHEET C-514
- TG — TIDE GATE SEE SHEET C-513

0 100' 200'
SCALE:1"=100'
VERT EXAG 10:1

FINAL JUNE 2016
NOT FOR CONSTRUCTION

US Army Corps of Engineers®

MARK	DESCRIPTION	DATE	APPR.
2	INCORPORATES SPONSOR AND STAKEHOLDER COMMENTS	3/21/2016	MAP
1	REVISIONS FOR AJR COMMENTS	1/9/2015	MAP

U.S. ARMY CORPS OF ENGINEERS
U.S. ARMY ENGINEER DISTRICT
NEW YORK
http://www.nan.usace.army.mil

MOFFATT & NICHOL
529 5th Avenue, 14th Floor
New York, New York 10017
212-768-7454

DESIGNED BY: MAP
DWN BY: DJMac
CKD BY: MAP
SUBMITTED BY: MARK PIELLO
PLOT SCALE: 1:100
PLOT DATE: 6/2/2016
SIZE: ANSI D
FILE NAME: 698705C-306.dgn
DATE: 2016/03/11
SOLICITATION NO.: XXXX
CONTRACT NO.: XXXX
FILE NUMBER: XXXX

COASTAL STORM RISK MANAGEMENT
FEASIBILITY STUDY FOR THE
SOUTH SHORE OF STATEN ISLAND

SITE PROFILE (6 OF 6)

SHEET IDENTIFICATION
C-306
SHEET OF

LAST PLOTTED BY: arsmith 3:13:59 PM 6/2/2016 FILE: 698705C-306.dgn PATH: Q:\TA\6987-05\cadd_Active_Preliminary\

LAST SAVED BY: JMACPHERSON, 1/31/2011 1:30:33 PM

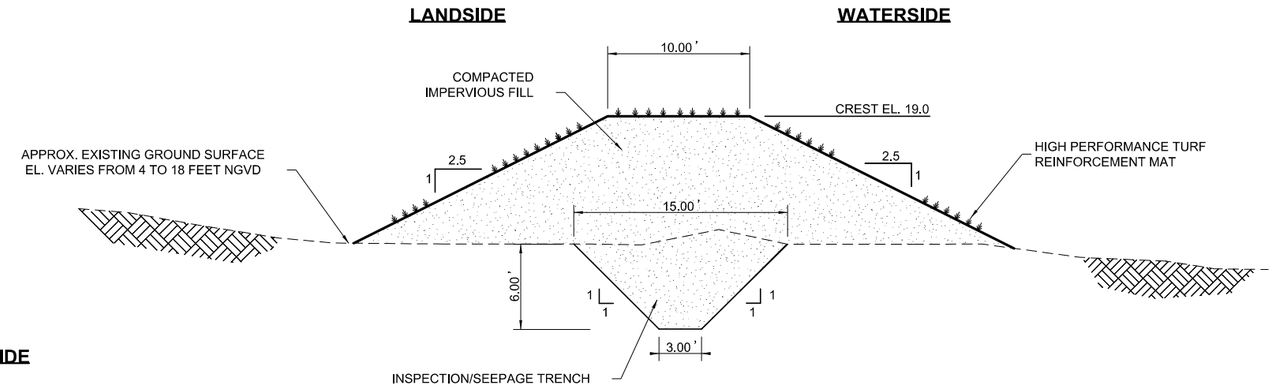

D4 C-501 LEVEE SECTION (16.6 FT SWL)
SCALE: 3/16"=1'-0"

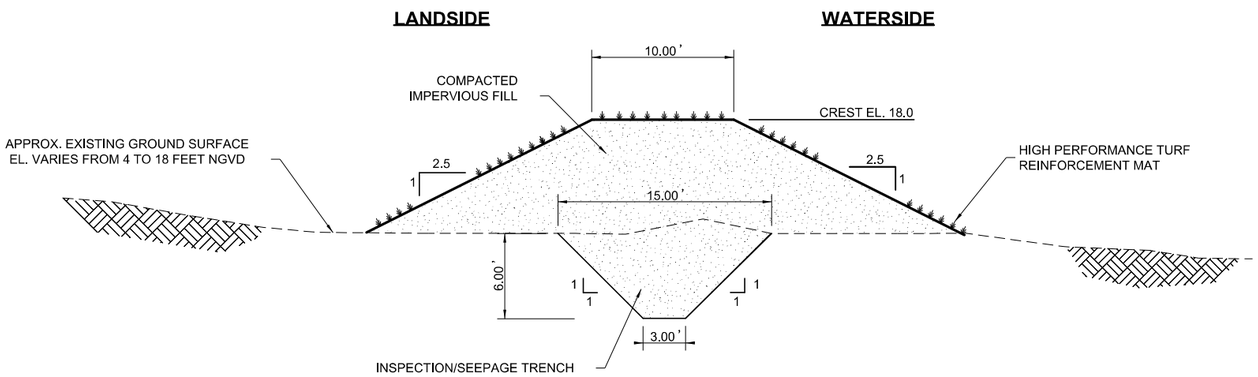

C2 C-501 LEVEE SECTION (15.6 FT SWL)
SCALE: 3/16"=1'-0"

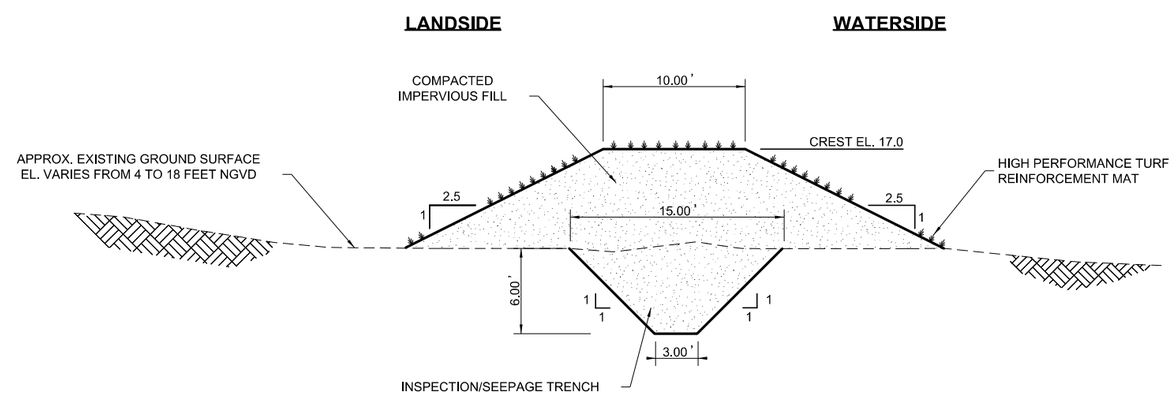

B4 C-501 LEVEE SECTION (14.3 FT SWL)
SCALE: 3/16"=1'-0"

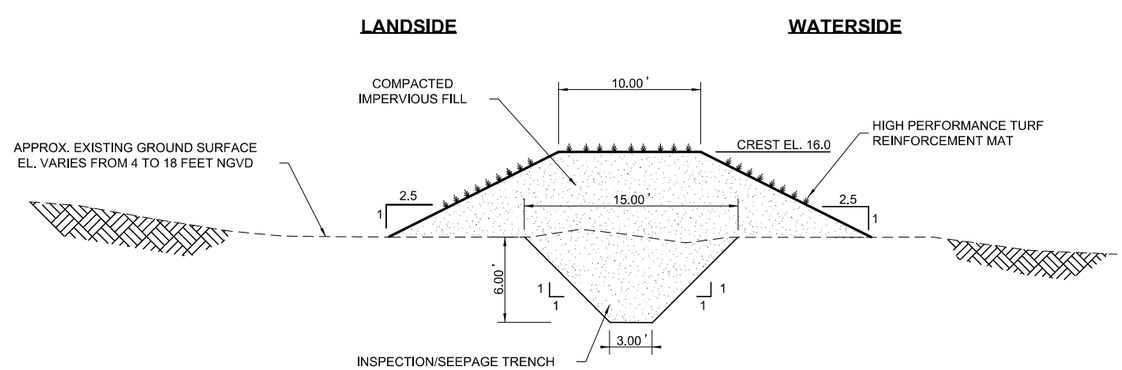

A2 C-501 LEVEE SECTION (13.3 FT SWL)
SCALE: 3/16"=1'-0"

NOTES

1. SECTION REPRESENTS STA 10+25 TO 13+40 AND 15+00 TO 40+00.

0 4' 8' 12'
SCALE:3/16"=1'

FINAL JUNE 2016
NOT FOR CONSTRUCTION

US Army Corps of Engineers®

MARK	DESCRIPTION	DATE	APPR.
2	INCORPORATES SPONSOR AND STAKEHOLDER COMMENTS	3/21/2016	MAP
1	REVISIONS FOR AJR COMMENTS	1/9/2015	MAP

U.S. ARMY CORPS OF ENGINEERS
U.S. ARMY ENGINEER DISTRICT
NEW YORK
http://www.nan.usace.army.mil
MOFFATT & NICHOL
529 5th Avenue, 14th Floor
New York, New York 10017
212-768-7454

DESIGNED BY: MAP | DATE: 2016/03/11 | SOLICITATION NO.: | CONTRACT NO.: | FILE NUMBER:
DWN BY: CSG | CKD BY: MAP | SUBMITTED BY: | PLOT SCALE: 1:1 | PLOT DATE: 6/2/2016 | SIZE: ANSI D | FILE NAME: 698705C-501.dgn

COASTAL STORM RISK MANAGEMENT FEASIBILITY STUDY FOR THE SOUTH SHORE OF STATEN ISLAND

TYPICAL SECTIONS REACH A-1

SHEET IDENTIFICATION
C-501
SHEET OF

PATH: Q:\TA\6987-05\cadd_Active_Preliminary\
FILE: 698705C-501.dgn
6/2/2016 3:14:00 PM arsmith
LAST PLOTTED BY:

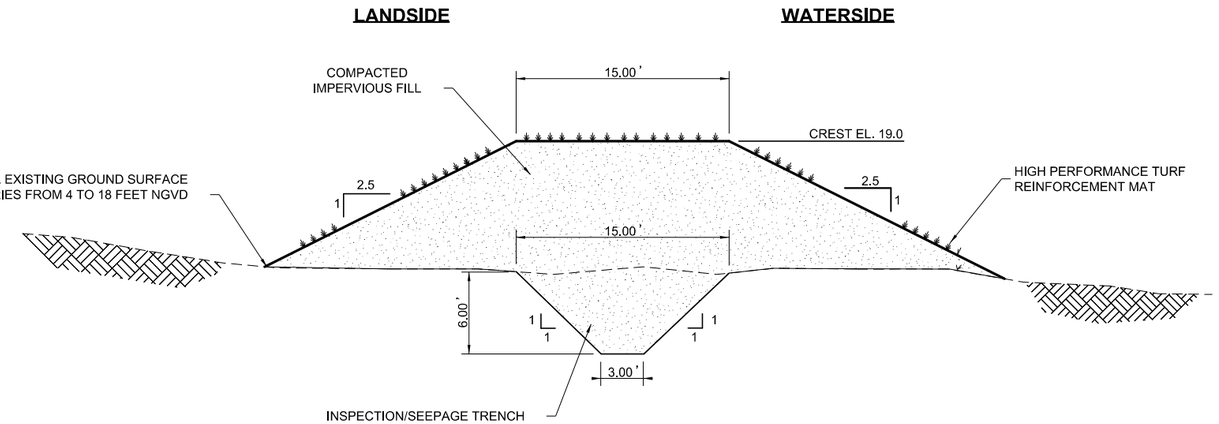

D4 C-502 LEVEE SECTION (16.6 FT SWL)

SCALE: 3/16"=1'-0"

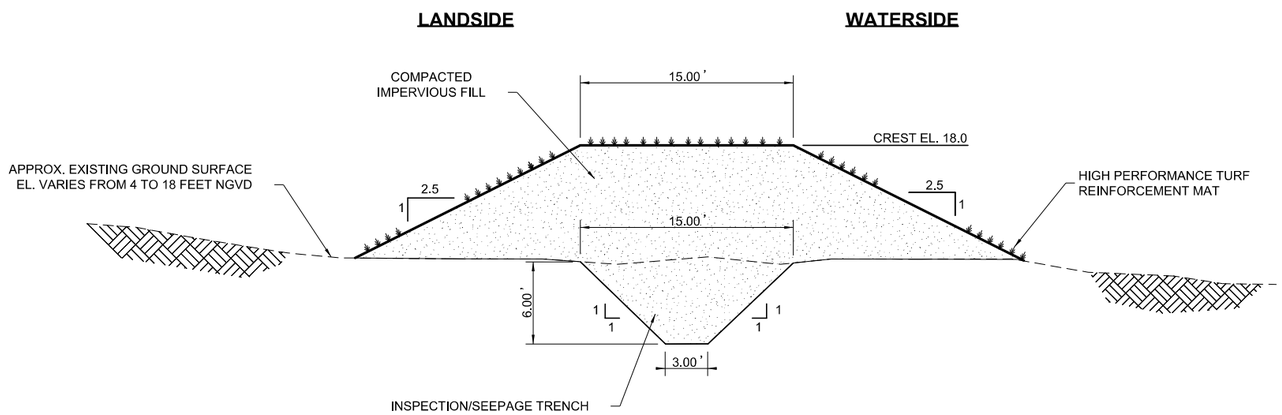

C2 C-502 LEVEE SECTION (15.6 FT SWL)

SCALE: 3/16"=1'-0"

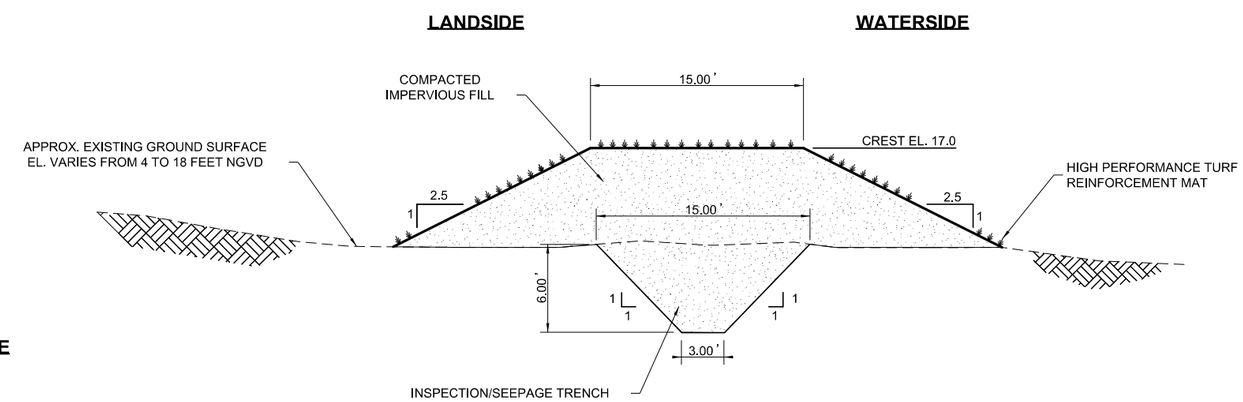

B4 C-502 LEVEE SECTION (14.3 FT SWL)

SCALE: 3/16"=1'-0"

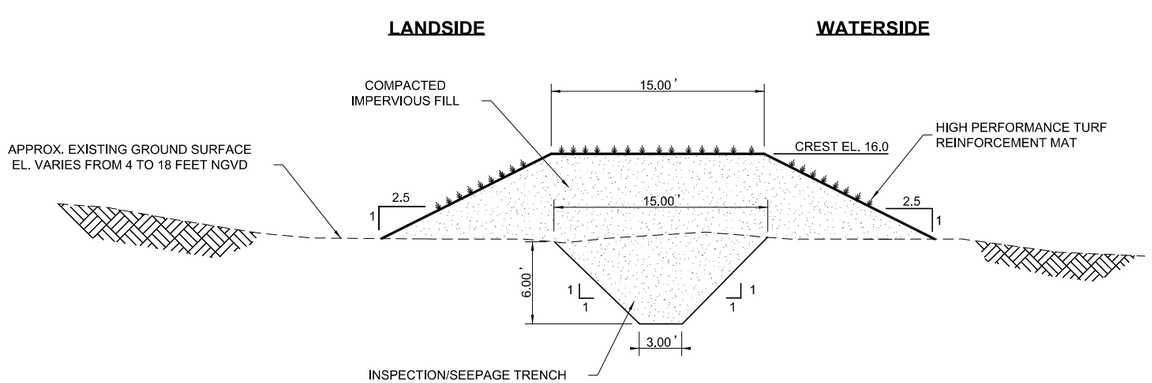

A2 C-502 LEVEE SECTION (13.3 FT SWL)

SCALE: 3/16"=1'-0"

NOTES

1. SECTION REPRESENTS STA 41+00 TO STA 47+14.81.

FINAL JUNE 2016
NOT FOR CONSTRUCTION

0 4' 8' 12'

SCALE:3/16"=1'

US Army Corps of Engineers®

MARK	DESCRIPTION	DATE	APPR.
2	INCORPORATES SPONSOR AND STAKEHOLDER COMMENTS	3/21/2016	MAP
1	REVISIONS FOR AJR COMMENTS	1/9/2015	MAP

DESIGNED BY: MAP
DATE: 2016/03/11
DWN BY: CSG
CKD BY: MAP
SOLICITATION NO.:
SUBMITTED BY:
CONTRACT NO.:
PLOT SCALE: 1:1
PLOT DATE: 6/2/2016
FILE NUMBER:
SIZE: ANSI D
FILE NAME: 698705C-502.dgn

U.S. ARMY CORPS OF ENGINEERS
U.S. ARMY ENGINEER DISTRICT
NEW YORK
http://www.nan.usace.army.mil

MOFFATT & NICHOL
529 5th Avenue, 14th Floor
New York, New York 10017
212-768-7454

COASTAL STORM RISK MANAGEMENT
FEASIBILITY STUDY FOR THE
SOUTH SHORE OF STATEN ISLAND

TYPICAL SECTIONS REACH A-2

SHEET IDENTIFICATION
C-502
SHEET OF

PATH: Q:\TA\6987-05\cadd_Active_Preliminary\
FILE: 698705C-502.dgn
6/2/2016 3:14:00 PM
LAST PLOTTED BY: arsmith

NOTES

1. SECTION REPRESENTS STA 47+14.81 TO STA 65+40.

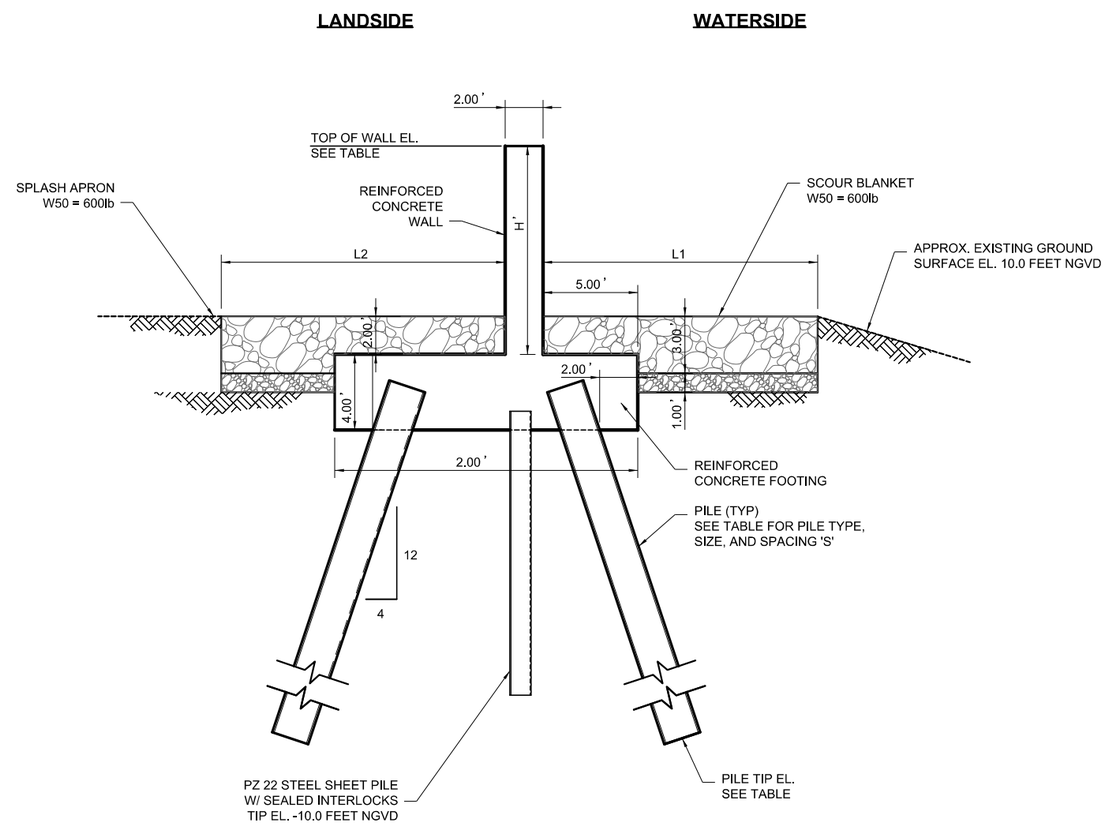

B2 / C-503 FLOOD WALL SECTION

SCALE: 1/4"=1'-0"

ELEVATIONS (FT, NGVD)			PILE DATA		DIMENSIONS					
SWL (FT)	TOP OF WALL	PILE TIP	TYPE	SIZE	H (FT)	B (FT)	T (FT)	L1 (FT)	L2 (FT)	S (FT)
13.3	16.0	-75.0	H-PILE	HP14 X 89	8.0	12.0	1.5	15.0	10.0	12.0
14.3	18.0	-75.0	H-PILE	HP14 X 89	10.0	15.0	1.5	15.0	12.0	11.0
15.6	20.5	-90.0	H-PILE	HP14 X 89	12.5	16.0	2.0	15.0	15.0	12.0
16.6	22.5	-90.0	H-PILE	HP14 X 90	14.5	18.0	2.5	15.0	16.0	10.0

FINAL JUNE 2016
NOT FOR CONSTRUCTION

0 3' 6' 9'
SCALE: 1/4"=1'

US Army Corps of Engineers®

MARK	DESCRIPTION	DATE	APPR.
2	INCORPORATES SPONSOR AND STAKEHOLDER COMMENTS	3/21/2016	MAP
1	REVISIONS FOR AJR COMMENTS	1/9/2015	MAP

U.S. ARMY CORPS OF ENGINEERS
U.S. ARMY ENGINEER DISTRICT
NEW YORK
http://www.nan.usace.army.mil
MOFFATT & NICHOL
529 5th Avenue, 14th Floor
New York, New York 10017
212-768-7454

DESIGNED BY: MAP
DWN BY: CSG
CKD BY: MAP
SUBMITTED BY:
PLOT SCALE: 1:2
PLOT DATE: 6/2/2016
SIZE: ANSI D
FILE NAME: 698705C-503.dgn
DATE: 2016/03/11
SOLICITATION NO.:
CONTRACT NO.:
FILE NUMBER:

COASTAL STORM RISK MANAGEMENT
FEASIBILITY STUDY FOR THE
SOUTH SHORE OF STATEN ISLAND

TYPICAL SECTIONS REACH A-3

SHEET IDENTIFICATION
C-503
SHEET OF

PATH: Q:\TA\6987-05\cadd_Active_Preliminary\
FILE: 698705C-503.dgn
6/2/2016 3:14:01 PM
LAST PLOTTED BY: arsmith

NOTES

1. MIN. 2.0' THICKNESS OF BEDDING STONE LAYER IN CORE AREA. THICKNESS WILL VARY WITH EXISTING GROUND ELEVATION.
2. MIN. 1.5' THICKNESS OF BEDDING STONE LAYER IN CORE AREA. THICKNESS WILL VARY WITH EXISTING GROUND ELEVATION.
3. SECTION REPRESENT STA. 65+40 TO STA. 266+00.

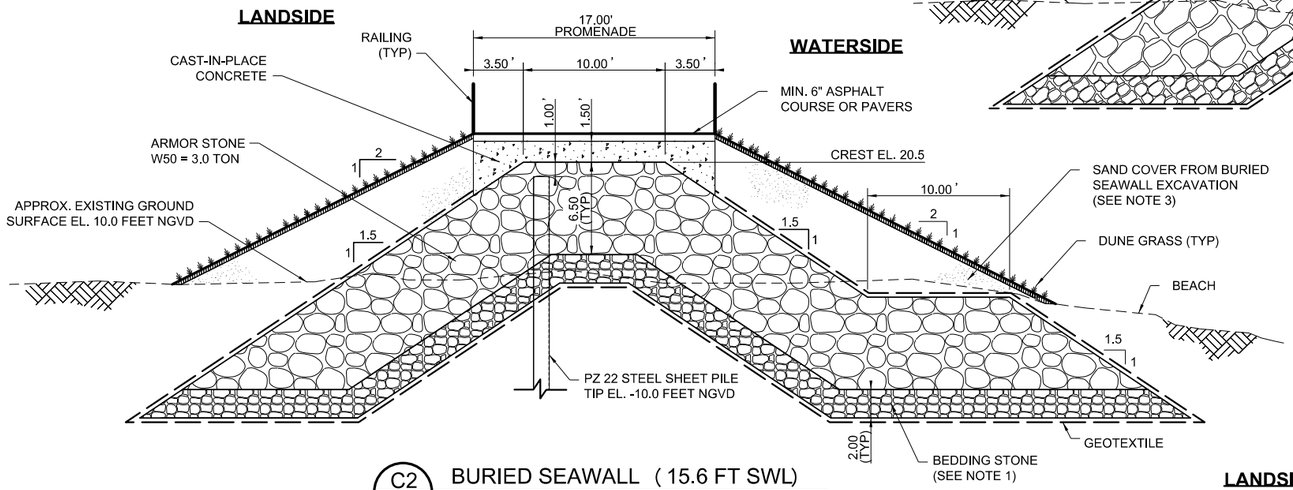

C2 C-504 BURIED SEAWALL (15.6 FT SWL)
SCALE: 3/16"=1'-0"

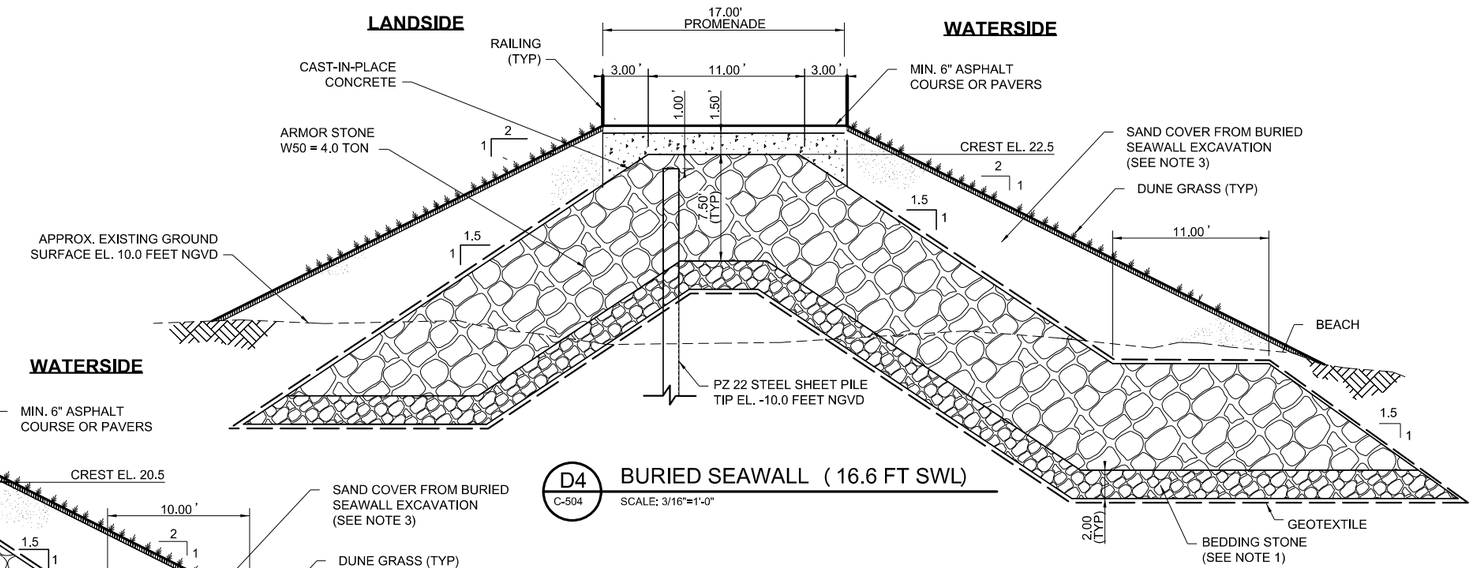

D4 C-504 BURIED SEAWALL (16.6 FT SWL)
SCALE: 3/16"=1'-0"

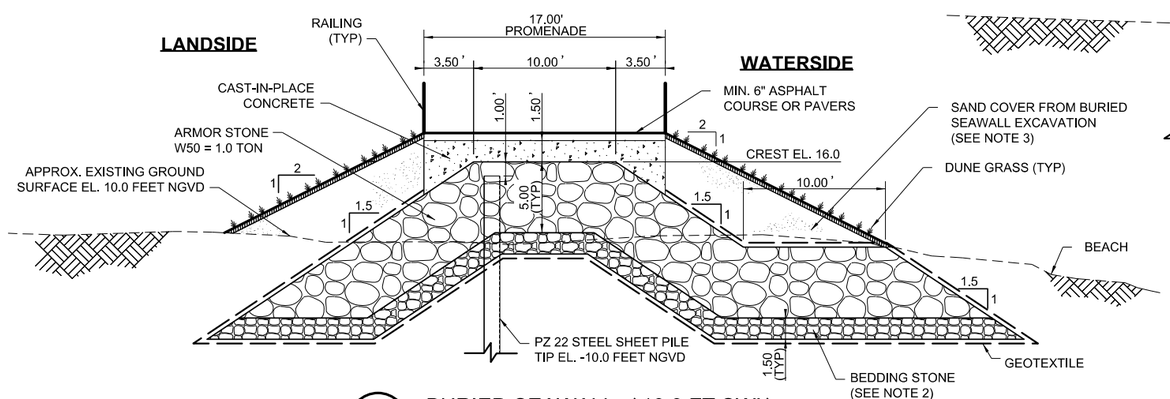

A2 C-504 BURIED SEAWALL (13.3 FT SWL)
SCALE: 3/16"=1'-0"

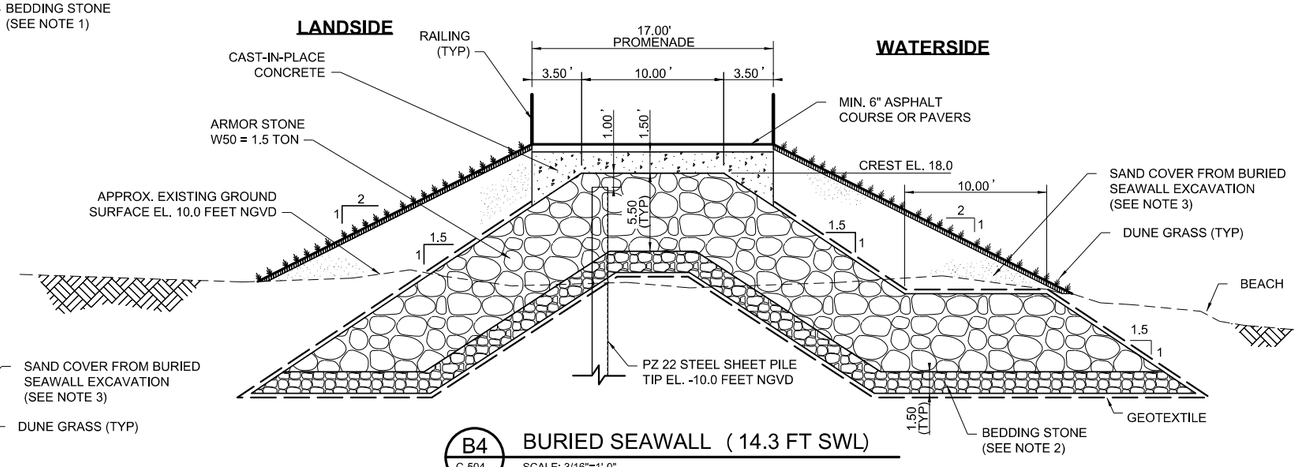

B4 C-504 BURIED SEAWALL (14.3 FT SWL)
SCALE: 3/16"=1'-0"

FINAL JUNE 2016
NOT FOR CONSTRUCTION

0 4' 8' 12'
SCALE:3/16"=1'

US Army Corps of Engineers®

MARK	DESCRIPTION	DATE	APPR.
2	INCORPORATES SPONSOR AND STAKEHOLDER COMMENTS	3/21/2016	MAP
1	REVISIONS FOR AJR COMMENTS	1/9/2015	MAP

DESIGNED BY: MAP
DWN BY: CSG
CKD BY: MAP
SUBMITTED BY:
DATE: 20160/3/11
SOLICITATION NO.:
CONTRACT NO.:
FILE NUMBER:
PLOT SCALE: 1:1
PLOT DATE: 6/2/2016
SIZE: ANSI D
FILE NAME: 698705C-504.dgn

U.S. ARMY CORPS OF ENGINEERS
U.S. ARMY ENGINEER DISTRICT
NEW YORK
http://www.nan.usace.army.mil

MOFFATT & NICHOL
529 5th Avenue, 14th Floor
New York, New York 10017
212-768-7454

COASTAL STORM RISK MANAGEMENT
FEASIBILITY STUDY FOR THE
SOUTH SHORE OF STATEN ISLAND

TYPICAL SECTIONS REACH A-4

SHEET IDENTIFICATION
C-504
SHEET OF

PATH: Q:\TA\6987-05\cadd_Active_Preliminary\
FILE: 698705C-504.dgn
6/2/2016 3:14:02 PM
LAST PLOTTED BY: arsmith

NOTES

1. MIN. 2.0' THICKNESS OF BEDDING STONE LAYER IN CORE AREA. THICKNESS WILL VARY WITH EXISTING GROUND ELEVATION.
2. MIN. 1.5' THICKNESS OF BEDDING STONE LAYER IN CORE AREA. THICKNESS WILL VARY WITH EXISTING GROUND ELEVATION.
3. SECTION REPRESENT STA. 266+00 TO STA. 288+00.

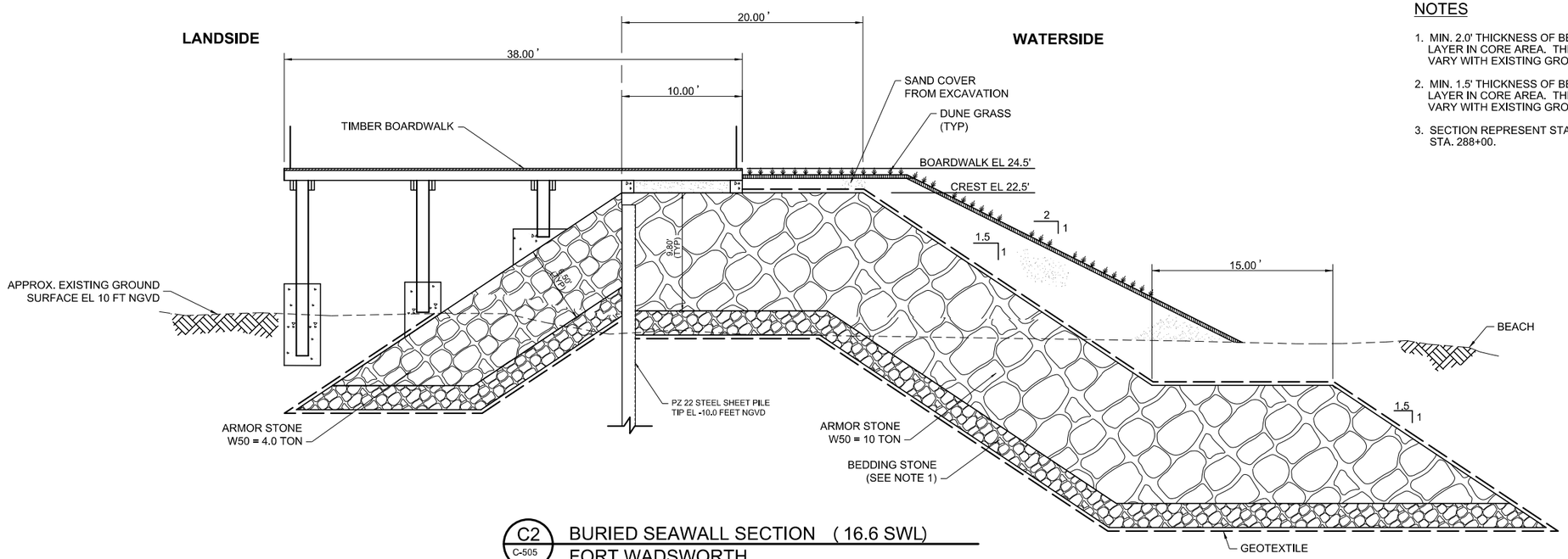

C2 / C-505 BURIED SEAWALL SECTION (16.6 SWL)
FORT WADSWORTH
SCALE: 3/16"=1'-0"

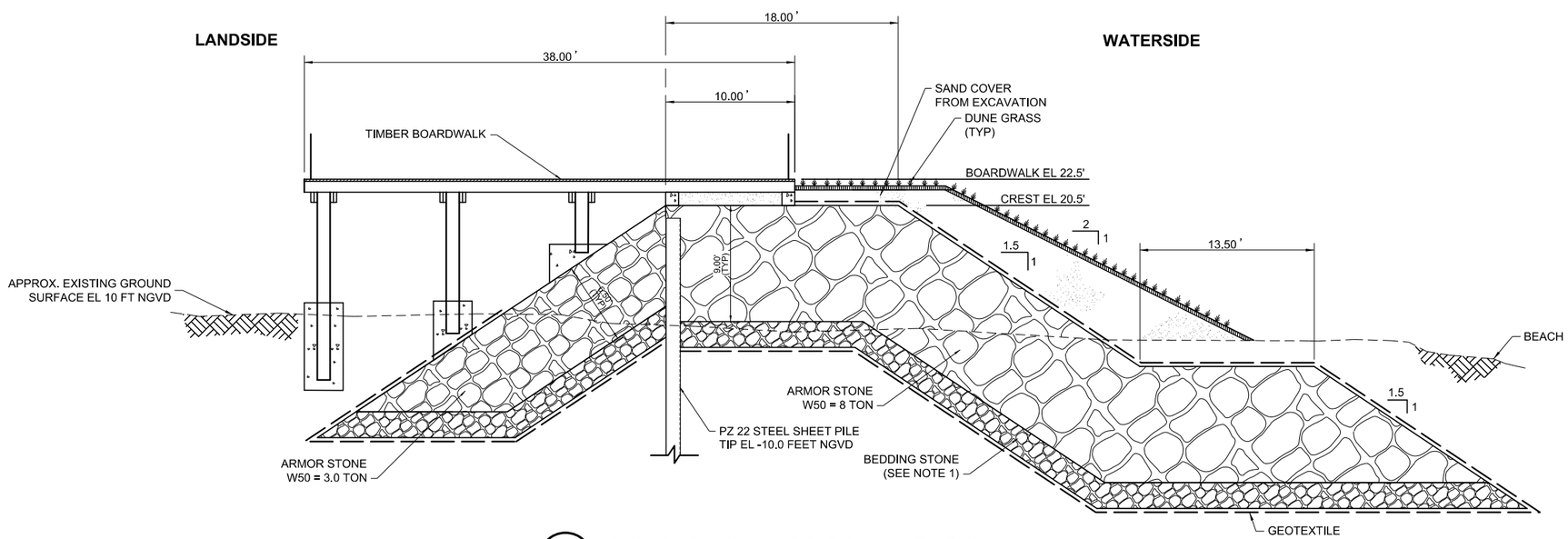

A2 / C-505 BURIED SEAWALL SECTION (15.6 SWL)
FORT WADSWORTH
SCALE: 3/16"=1'-0"

FINAL JUNE 2016
NOT FOR CONSTRUCTION

0 4' 8' 12'
SCALE:3/16"=1'

US Army Corps of Engineers®

MARK	DESCRIPTION	DATE	APPR.
2	INCORPORATES SPONSOR AND STAKEHOLDER COMMENTS	3/21/2016	MAP
1	REVISIONS FOR AJR COMMENTS	1/9/2015	MAP

DESIGNED BY: MAP
DWN BY: CSG
CKD BY: MAP
SUBMITTED BY:
PLOT SCALE: 1:1
PLOT DATE: 6/2/2016
SIZE: ANSI D
FILE NAME: 698705C-505.dgn
DATE: 2016/03/11
SOLICITATION NO.:
CONTRACT NO.:
FILE NUMBER:

U.S. ARMY CORPS OF ENGINEERS
U.S. ARMY ENGINEER DISTRICT
NEW YORK
http://www.nan.usace.army.mil

MOFFATT & NICHOL
529 5th Avenue, 14th Floor
New York, New York 10017
212-768-7454

COASTAL STORM RISK MANAGEMENT
FEASIBILITY STUDY FOR THE
SOUTH SHORE OF STATEN ISLAND

TYPICAL SECTIONS REACH A-4 AT
FORT WADSWORTH
(1 OF 2)

SHEET IDENTIFICATION
C-505
SHEET OF

PATH: Q:\TA\6987-05\cadd_Active_Preliminary\
FILE: 698705C-505.dgn
6/2/2016 3:14:04 PM
LAST PLOTTED BY: arsmith

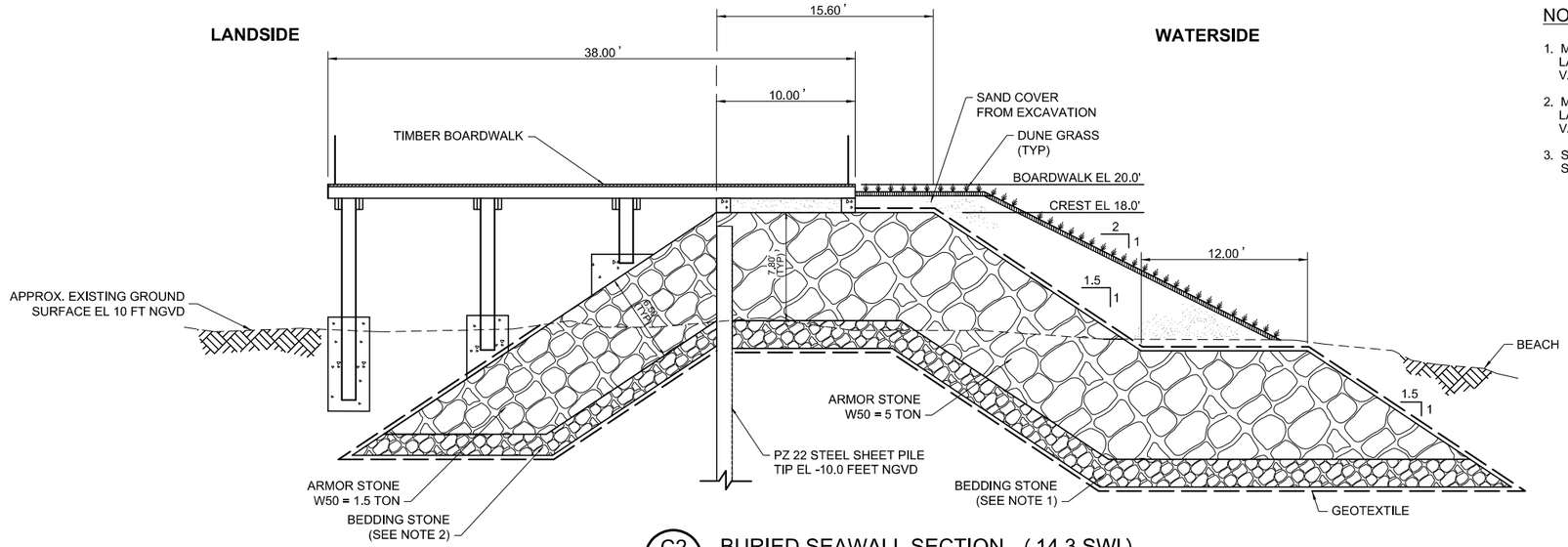

C2 / C-506 BURIED SEAWALL SECTION (14.3 SWL)
FORT WADSWORTH
SCALE: 3/16"=1'-0"

NOTES

1. MIN. 2.0' THICKNESS OF BEDDING STONE LAYER IN CORE AREA. THICKNESS WILL VARY WITH EXISTING GROUND ELEVATION.
2. MIN. 1.5' THICKNESS OF BEDDING STONE LAYER IN CORE AREA. THICKNESS WILL VARY WITH EXISTING GROUND ELEVATION.
3. SECTION REPRESENT STA. 266+00 TO STA. 288+00.

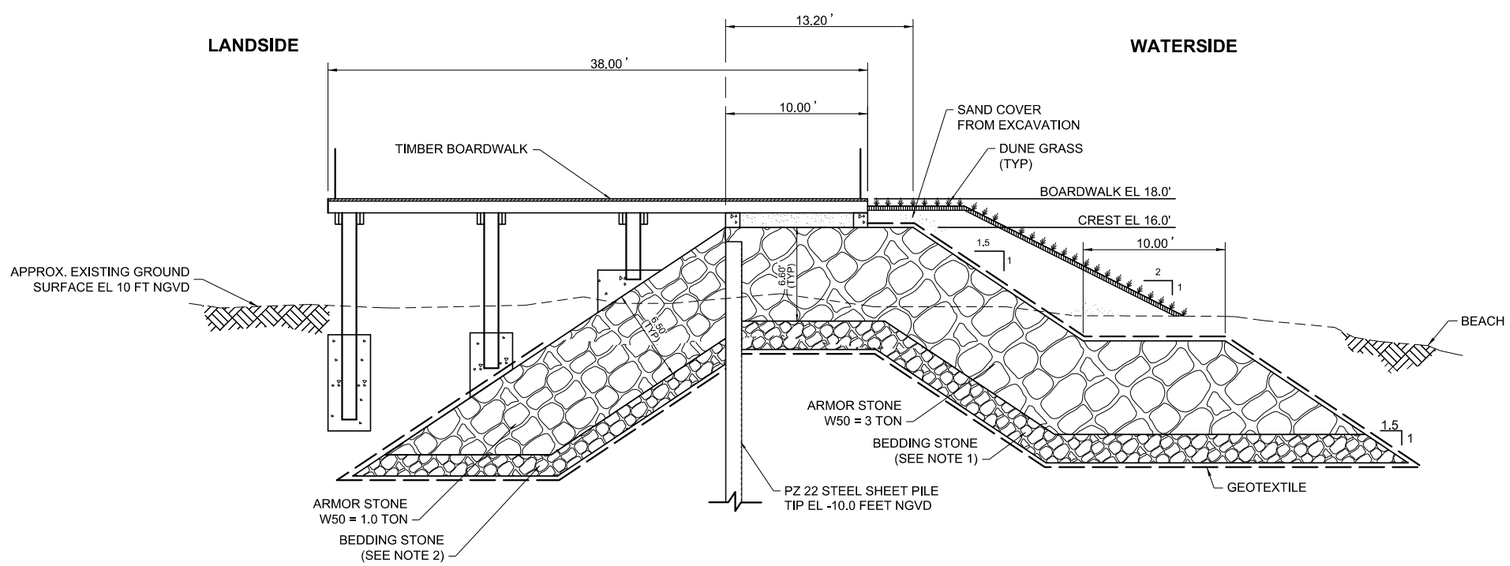

A2 / C-506 BURIED SEAWALL SECTION (13.3 SWL)
FORT WADSWORTH
SCALE: 3/16"=1'-0"

FINAL JUNE 2016
NOT FOR CONSTRUCTION

0 4' 8' 12'
SCALE:3/16"=1'

US Army Corps of Engineers®

MARK	REVISIONS FOR AJR COMMENTS	DATE	APPR.
1		1/9/2015	MAP
2	INCORPORATES SPONSOR AND STAKEHOLDER COMMENTS	3/21/2016	MAP

U.S. ARMY CORPS OF ENGINEERS
U.S. ARMY ENGINEER DISTRICT
NEW YORK
http://www.nan.usace.army.mil

MOFFATT & NICHOL
529 5th Avenue, 14th Floor
New York, New York 10017
212-768-7454

DESIGNED BY: MAP | DATE: 2016/03/11
DWN BY: CSG | CKD BY: MAP | SOLICITATION NO.:
SUBMITTED BY: | CONTRACT NO.:
PLOT SCALE: 1:1 | PLOT DATE: 6/2/2016 | FILE NUMBER:
SIZE: ANSI D | FILE NAME: 698705C-506.dgn

COASTAL STORM RISK MANAGEMENT
FEASIBILITY STUDY FOR THE
SOUTH SHORE OF STATEN ISLAND

TYPICAL SECTIONS REACH A-4 AT
FORT WADSWORTH
(2 OF 2)

SHEET IDENTIFICATION
C-506
SHEET OF

PATH: Q:\TA\6987-05\cadd_Active_Preliminary\
FILE: 698705C-506.dgn
6/2/2016 3:14:05 PM
LAST PLOTTED BY: arsmith

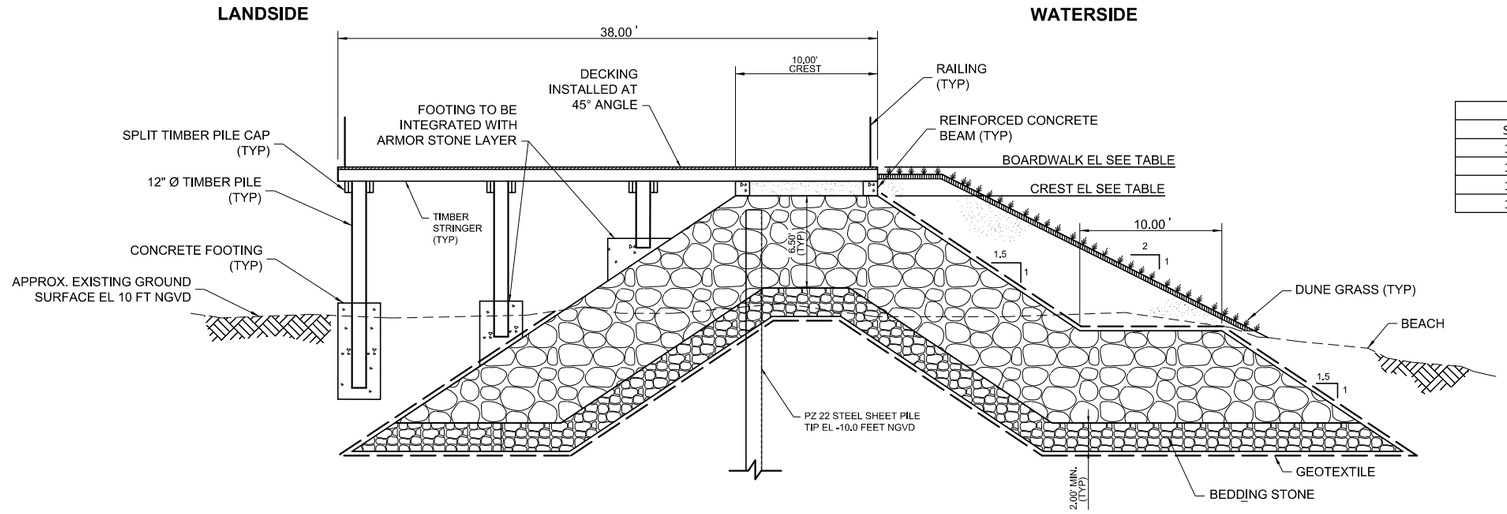

ELEVATIONS (FT, NGVD)		
SWL	CREST ELEVATION	TOP OF BOARDWALK
13.3	16.0	18.0
14.3	18.0	20.0
15.6	20.5	22.5
16.6	22.5	24.5

NOTE

1. SECTION REPRESENTS TYPICAL BOARDWALK SECTION FROM STA. 158+00 TO STA. 266+00.

B2 / C-507 TYPICAL SECTION - BOARDWALK

SCALE: 3/16"=1'-0"

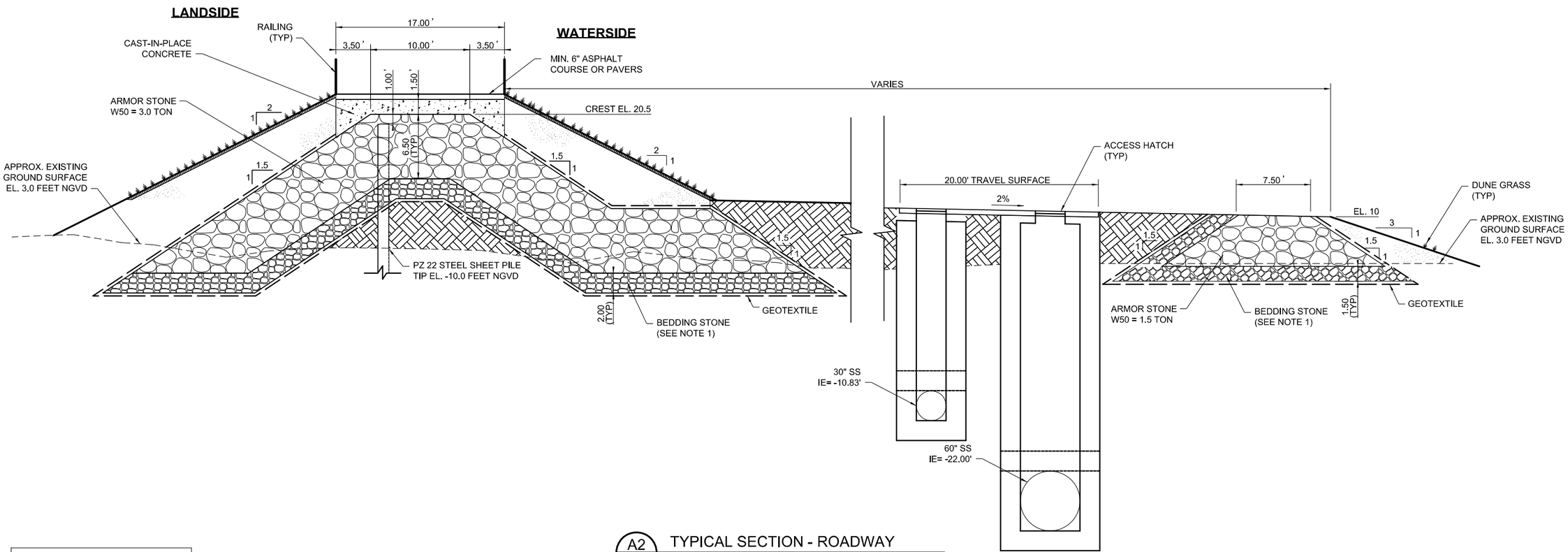

A2 / C-507 TYPICAL SECTION - ROADWAY

SCALE: 3/16"=1'-0"

0 4' 8' 12'

SCALE:3/16"=1'

FINAL JUNE 2016
NOT FOR CONSTRUCTION

US Army Corps of Engineers®

MARK	DESCRIPTION	DATE	APPR.
2	INCORPORATES SPONSOR AND STAKEHOLDER COMMENTS	3/21/2016	MAP
1	REVISIONS FOR AJR COMMENTS	1/9/2015	MAP

DESIGNED BY: MAP
DWN BY: CSG
CKD BY: MAP
SUBMITTED BY:
DATE: 2016/03/11
SOLICITATION NO.:
CONTRACT NO.:
FILE NUMBER:
PLOT SCALE: 1:1
PLOT DATE: 6/2/2016
SIZE: ANSI D
FILE NAME: 698705C-507.dgn

U.S. ARMY CORPS OF ENGINEERS
U.S. ARMY ENGINEER DISTRICT
NEW YORK
http://www.nan.usace.army.mil

MOFFATT & NICHOL
529 5th Avenue, 14th Floor
New York, New York 10017
212-768-7454

COASTAL STORM RISK MANAGEMENT
FEASIBILITY STUDY FOR THE
SOUTH SHORE OF STATEN ISLAND

TYPICAL SECTION
BOARDWALK AND ROADWAY

SHEET IDENTIFICATION
C-507
SHEET OF

PATH: Q:\TA\6987-05\cadd_Active_Preliminary\
FILE: 698705C-507.dgn
6/2/2016 3:14:05 PM
LAST PLOTTED BY: arsmith

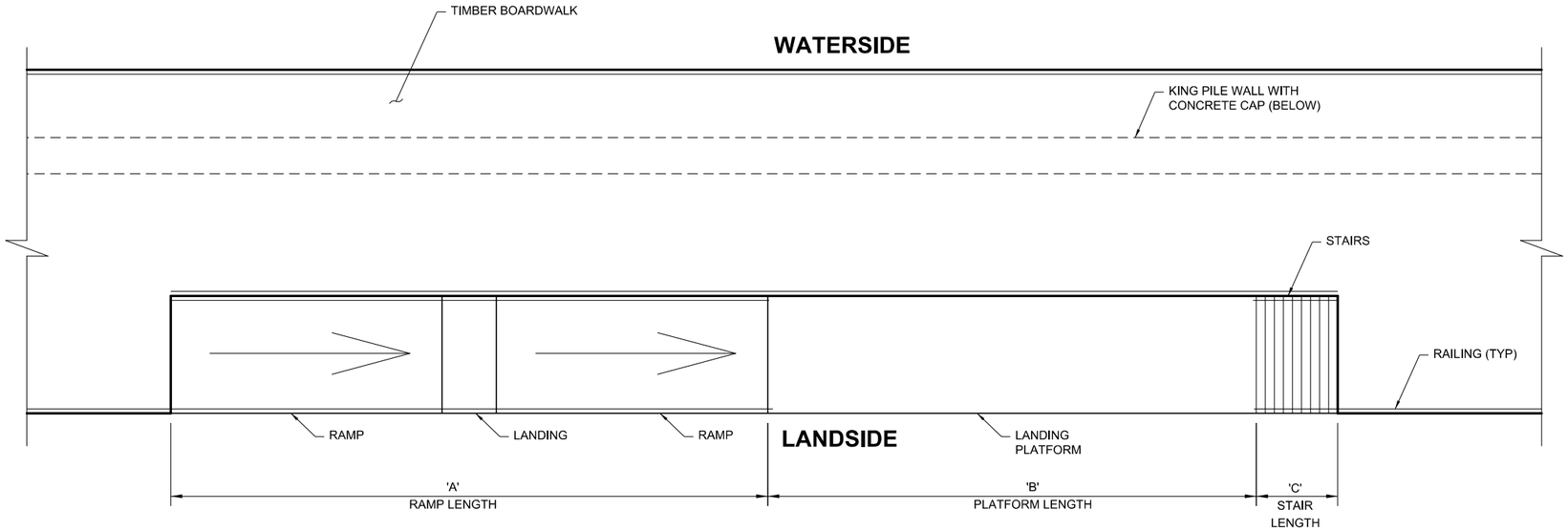

C1 / C-508 TYPICAL PLAN - BOARDWALK ACCESS

SCALE: NTS

APPROX. BEGIN STATION	TOTAL LENGTH (FT)	PLATFORM ELEVATION (FT)	DIMENSIONS		
			RAMP 'A' (FT)	PLATFORM 'B' (FT)	STAIR 'C' (FT)
162+50'	265	ON GRADE	160	89	16.0
189+00'	495	ON GRADE	155	325	15.0
221+00'	230	17.0	66	156	8.0
262+50'	467	17.0	66	393	8.0

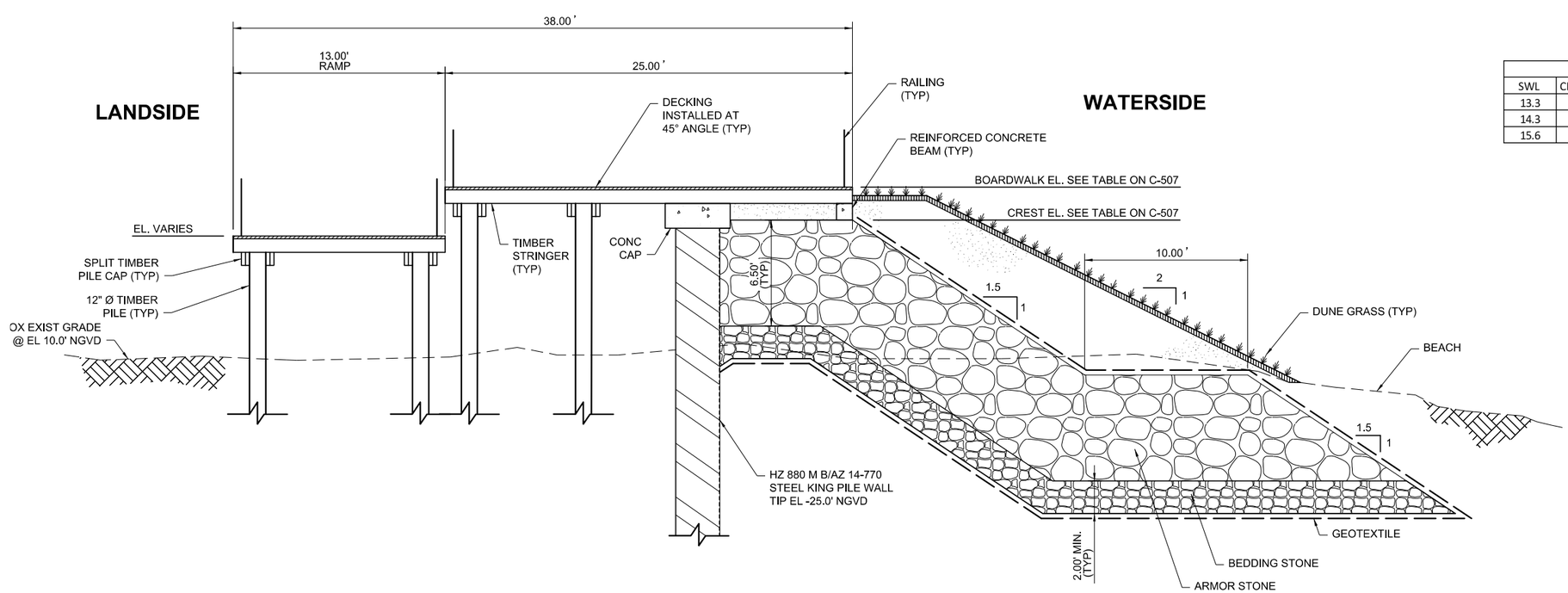

ELEVATIONS (FT, NGVD)		
SWL	CREST ELEVATION	TOP OF BOARDWALK
13.3	16.0	18.0
14.3	18.0	20.0
15.6	20.5	22.5

A1 / C-508 TYPICAL SECTION - BOARDWALK ACCESS

SCALE: 1/4"=1'-0"

0 4' 8' 12'

SCALE: 1/4"=1'

FINAL JUNE 2016
NOT FOR CONSTRUCTION

US Army Corps of Engineers®

MARK	DESCRIPTION	DATE	APPR.
2	INCORPORATES SPONSOR AND STAKEHOLDER COMMENTS	3/21/2016	MAP
1	REVISIONS FOR AJR COMMENTS	1/9/2015	MAP

U.S. ARMY CORPS OF ENGINEERS
U.S. ARMY ENGINEER DISTRICT
NEW YORK
http://www.nan.usace.army.mil

MOFFATT & NICHOL
529 5th Avenue, 14th Floor
New York, New York 10017
212-768-7454

DESIGNED BY: MAP
DWN BY: CSG
CKD BY: MAP
SUBMITTED BY:
DATE: 2016/03/11
SOLICITATION NO.:
CONTRACT NO.:
PLOT SCALE: AS NOTED
PLOT DATE:
FILE NUMBER:
SIZE: ANSI D
FILE NAME: 698705C-508.dgn

COASTAL STORM RISK MANAGEMENT
FEASIBILITY STUDY FOR THE
SOUTH SHORE OF STATEN ISLAND

TYPICAL SECTION BOARDWALK ACCESS

SHEET IDENTIFICATION
C-508
SHEET OF

PATH: Q:\TA\6987-05\cadd_Active_Preliminary\
FILE: 698705C-508.dgn
6/2/2016 3:14:07 PM arsmith
LAST PLOTTED BY:

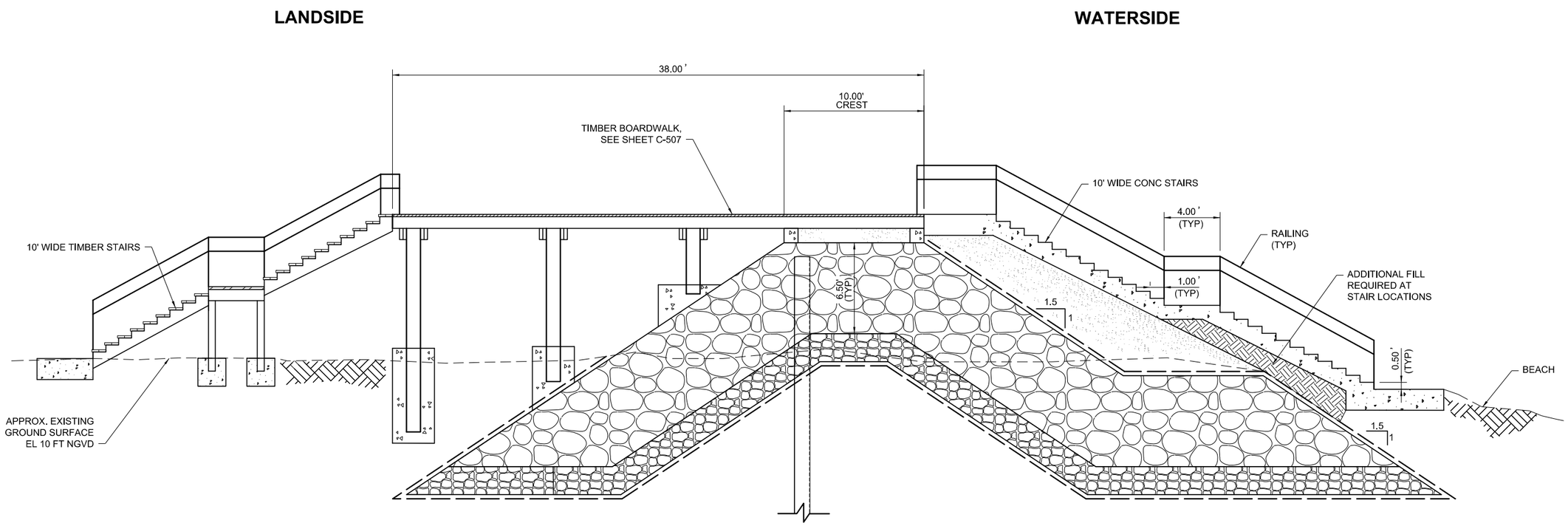

B2
C-509

TYPICAL SECTION - PEDESTRIAN ACCESS STAIRS

SCALE: 1/4"=1'-0"

NOTES

1. STAIR LAYOUT SHOWN FOR THE 15.6 FT SWL. NUMBER OF STAIRS WILL VARY BASED ON SWL. SEE SHEETS C-504 THROUGH C-506 FOR BURIED SEAWALL DIMENSIONS.

0 4' 8' 12'

SCALE: 1/4"=1'

FINAL JUNE 2016
NOT FOR CONSTRUCTION

PATH: Q:\TA\6987-05\cadd_Active_Preliminary\
FILE: 698705C-509.dgn
6/2/2016 3:14:07 PM
LAST PLOTTED BY: arsmith

US Army Corps of Engineers®

MARK	DESCRIPTION	DATE	APPR.
2	INCORPORATES SPONSOR AND STAKEHOLDER COMMENTS	3/21/2016	MAP
1	REVISIONS FOR AJR COMMENTS	1/9/2015	MAP

DESIGNED BY: MAP
DWN BY: CSG
CKD BY: MAP
SUBMITTED BY:
DATE: 20160311
SOLICITATION NO.:
CONTRACT NO.:
FILE NUMBER:
PLOT SCALE: 1:1
PLOT DATE: 6/2/2016
SIZE: ANSI D
FILE NAME: 698705C-509.dgn

U.S. ARMY CORPS OF ENGINEERS
U.S. ARMY ENGINEER DISTRICT
NEW YORK
http://www.nan.usace.army.mil

MOFFATT & NICHOL
529 5th Avenue, 14th Floor
New York, New York 10017
212-768-7454

COASTAL STORM RISK MANAGEMENT
FEASIBILITY STUDY FOR THE
SOUTH SHORE OF STATEN ISLAND

TYPICAL SECTION
PEDESTRIAN ACCESS STAIRS

SHEET IDENTIFICATION
C-509
SHEET OF

LEGEND

MVA = MOTOR VEHICLE ACCESS RAMP

DTP = COMBINED TRUCK & PEDESTRIAN ACCESS RAMP

NOTE:

1. RAMP SHOWN IS A TYPICAL CONDITION. RAMP GEOMETRY MAY VARY BY LOCATION.

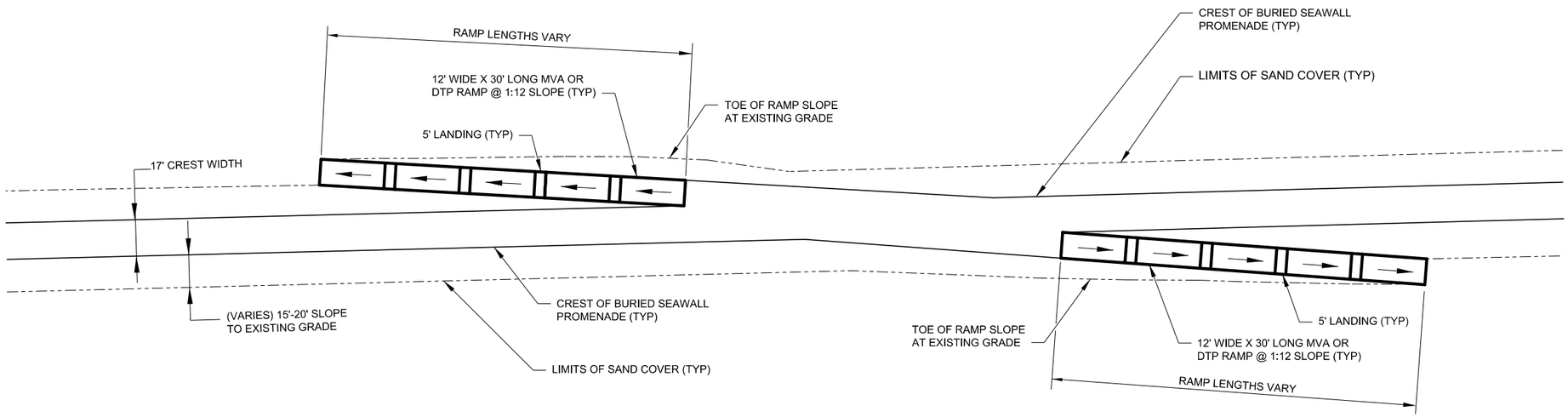

C1 / C-510 PLAN - TYPICAL MVA AND DTP RAMP DETAIL

NOT TO SCALE

FINAL JUNE 2016
NOT FOR CONSTRUCTION

US Army Corps of Engineers®

MARK	DESCRIPTION	DATE	APPR.
2	INCORPORATES SPONSOR AND STAKEHOLDER COMMENTS	3/21/2016	MAP
1	REVISIONS FOR AJR COMMENTS	1/9/2015	MAP

U.S. ARMY CORPS OF ENGINEERS
U.S. ARMY ENGINEER DISTRICT
NEW YORK
http://www.nan.usace.army.mil

MOFFATT & NICHOL
529 5th Avenue, 14th Floor
New York, New York 10017
212-768-7454

DESIGNED BY: MAP
DWN BY: CSG
CKD BY: MAP
SUBMITTED BY:
DATE: 2016/03/11
SOLICITATION NO.:
CONTRACT NO.:
PLOT SCALE: 1:1
PLOT DATE: 6/2/2016
SIZE: ANSI D
FILE NAME: 698705C-510.dgn
FILE NUMBER:

COASTAL STORM RISK MANAGEMENT
FEASIBILITY STUDY FOR THE
SOUTH SHORE OF STATEN ISLAND

TYPICAL MVA AND DTP RAMP DETAIL

SHEET IDENTIFICATION
C-510
SHEET OF

PATH: Q:\TA\6987-05\cadd_Active_Preliminary\
FILE: 698705C-510.dgn
6/2/2016 3:14:08 PM
LAST PLOTTED BY: arsmith

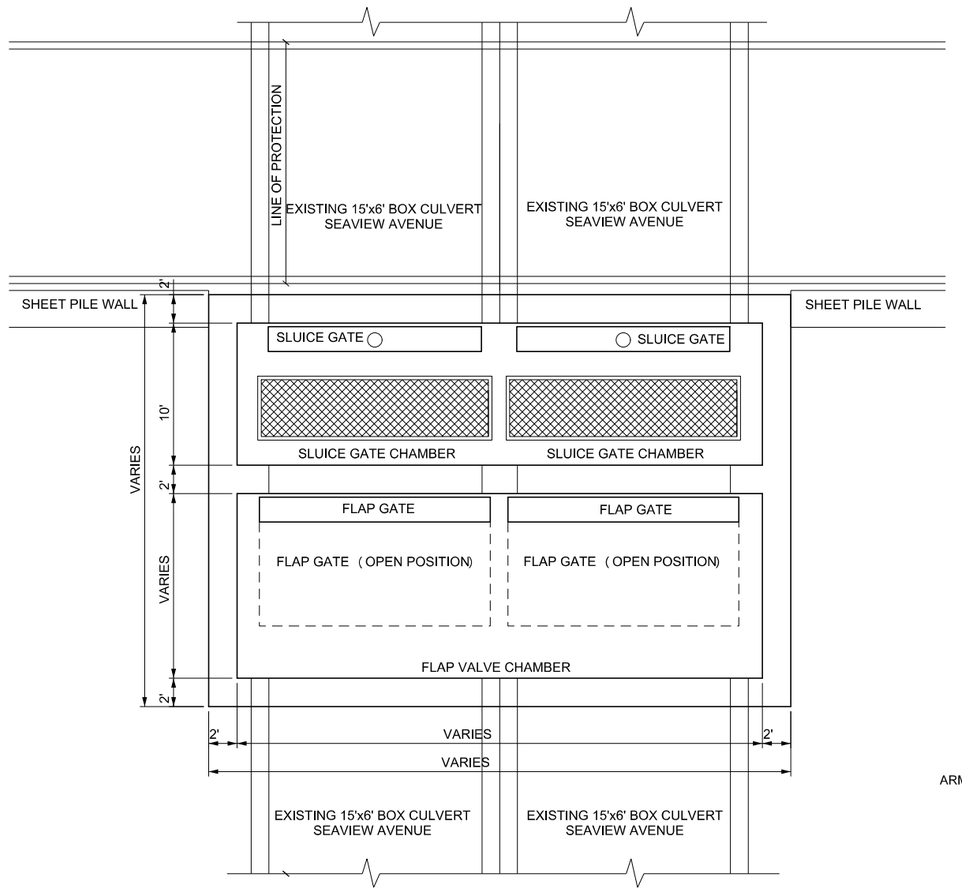

TYPICAL PLAN

SCALE: 3/16"=1'-0"

LOCATION	PIPE WIDTH (ft.)	PIPE HEIGHT (ft.)	INVERT AT CHAMBER (ft.)	# OF PIPES	WIDTH INSIDE SLUICE GATE CHAMBER (ft.)	ROOF ELEVATION FLAP GATE CHAMBER (ft.)	WIDTH INSIDE FLAP GATE CHAMBER (ft.)	LENGTH INSIDE FLAP GATE CHAMBER (ft.)	SLUICE GATE CHAMBER WIDTH (ft.)	FLAP GATE CHAMBER WIDTH (ft.)
EBBITS STREET	10.00	5.00	-1.44	1.00	15.00	11.00	15.00	12.00	19.00	19.00
NEW DROP LANE	13.00	5.50	-3. ±	1.00	21.00	12.00	21.00	13.00	25.00	25.00
TYSENS LANE	11.00	8.00	-4. ±	1.00	16.00	12.50	16.00	15.00	20.00	20.00
GREELY AVENUE	15.00	6.25	-2.66	2.00	38.00	13.00	38.00	14.00	42.00	42.00
MIDLAND AVENUE	8.00	4.00	-1.48	1.00	13.00	13.50	13.00	11.00	17.00	17.00
NAUGHTON AVENUE	10.00	6.50	-2.63	2.00	27.00	11.00	27.00	14.00	31.00	31.00
SEAVIEW AVENUE	15.00	6.00	-2.93	2.00	38.00	11.50	38.00	13.00	42.00	42.00
QUINTARD STREET	10.00	6.75	-2.87	2.00	27.00	11.50	27.00	14.00	30.00	30.00
SAND LANE	10.00	6.00	-2.60	1.00	15.00	12.00	15.00	13.00	19.00	19.00

* VERTICAL CONTROL IS IN NGVD 1929.

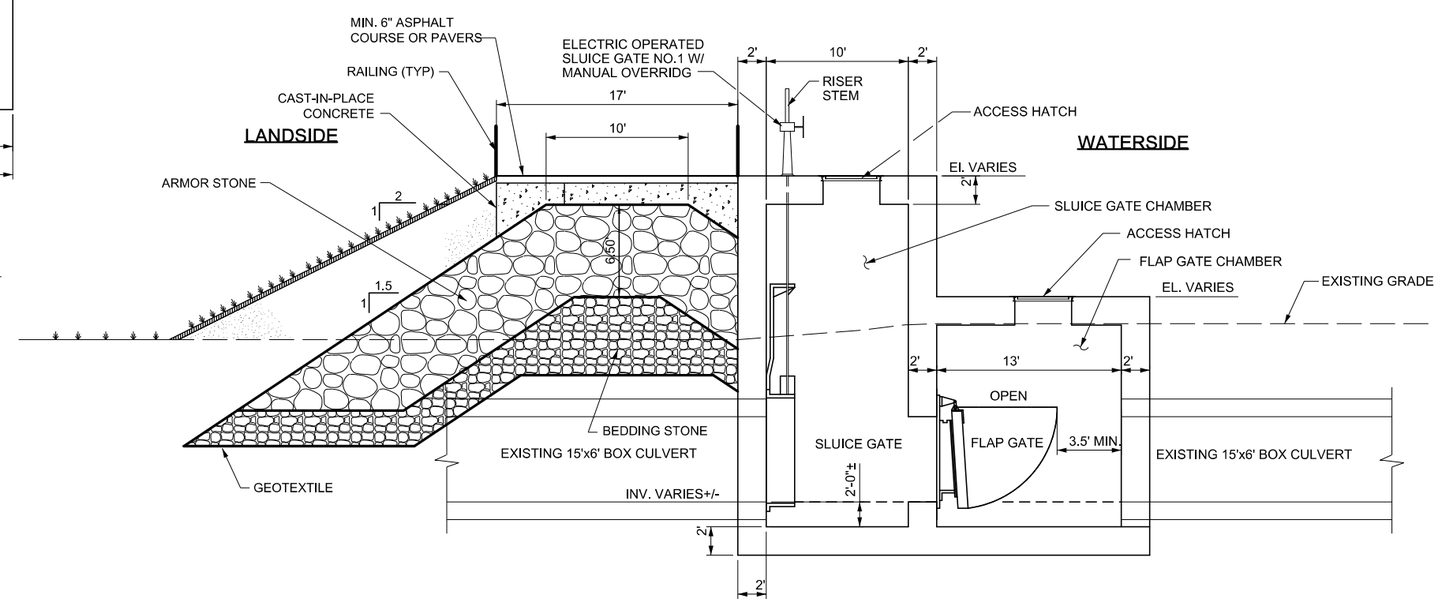

NOTE:
ALL REBARAS ARE #6@6" O.C. TOP AND BOTTOM, AND EACH FACE

A2
C-512

SECTION - TIDE ACTUATED DRAINAGE CONTROL STRUCTURE

SCALE: 3/16"=1'-0"

0 4' 8'
SCALE:3/16"=1'

FINAL JUNE 2016
NOT FOR CONSTRUCTION

US Army Corps of Engineers®

MARK	DESCRIPTION	DATE	APPR.
2	INCORPORATES SPONSOR AND STAKEHOLDER COMMENTS	3/21/2016	MAP
1	REVISIONS FOR AJR COMMENTS	1/9/2015	MAP

DESIGNED BY: MAP
DWN BY: CSG
CKD BY: MAP
SUBMITTED BY:
DATE: 2016/03/11
SOLICITATION NO.:
CONTRACT NO.:
FILE NUMBER:
PLOT SCALE: 1:1
PLOT DATE: 6/2/2016
SIZE: ANSI D
FILE NAME: 698705C-512.dgn

U.S. ARMY CORPS OF ENGINEERS
U.S. ARMY ENGINEER DISTRICT
NEW YORK
http://www.nan.usace.army.mil
MOFFATT & NICHOL
529 5th Avenue, 14th Floor
New York, New York 10017
212-768-7454

COASTAL STORM RISK MANAGEMENT
FEASIBILITY STUDY FOR THE
SOUTH SHORE OF STATEN ISLAND

TYPICAL DRAINAGE
CONTROL STRUCTURE

SHEET IDENTIFICATION
C-512
SHEET OF

PATH: Q:\TA\6987-05\cadd_Active_Preliminary\
FILE: 698705C-512.dgn
6/2/2016 3:14:08 PM
LAST PLOTTED BY: arsmith

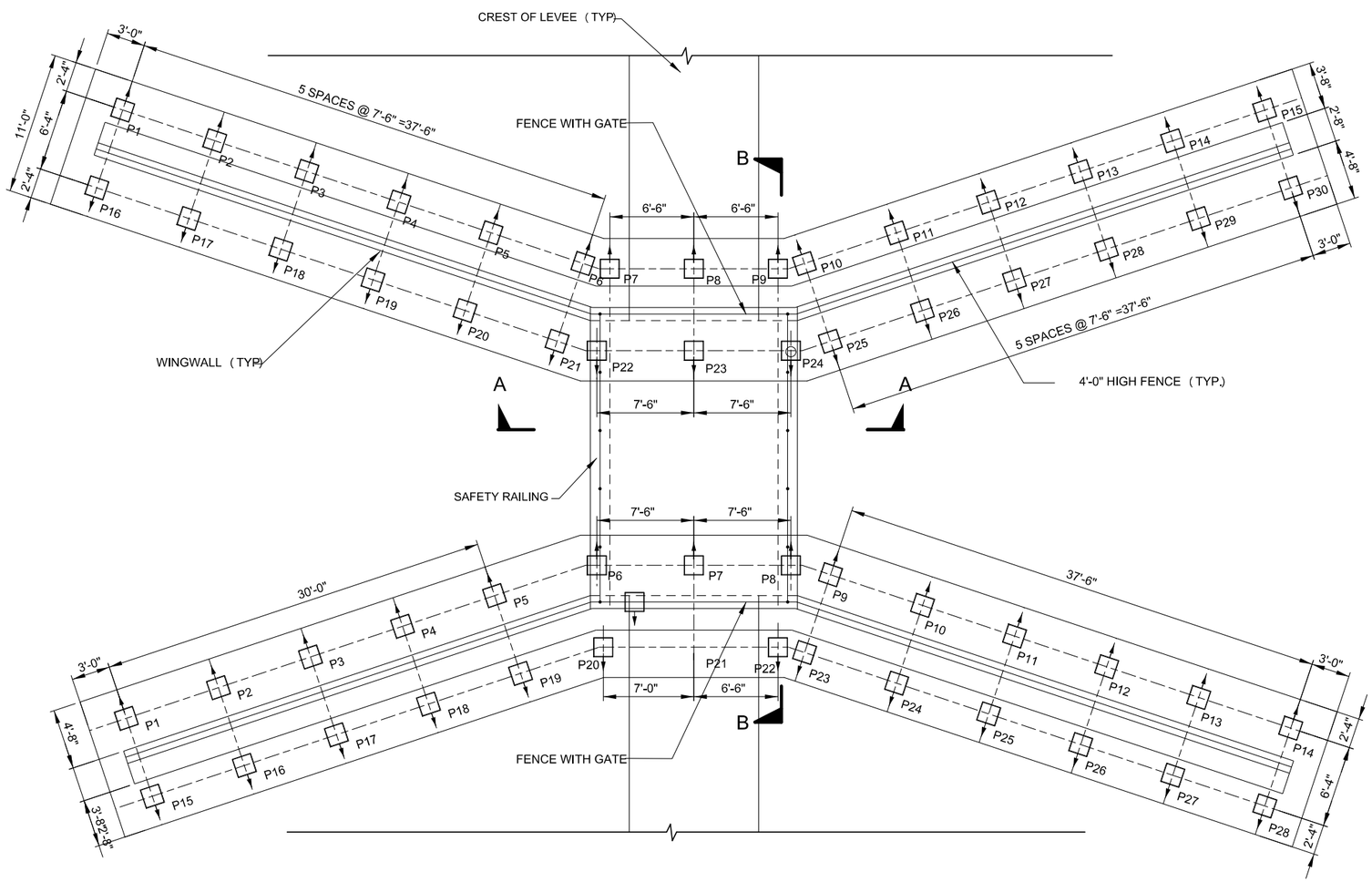

C C-513 PLAN
SCALE: 3/16"=1'-0"

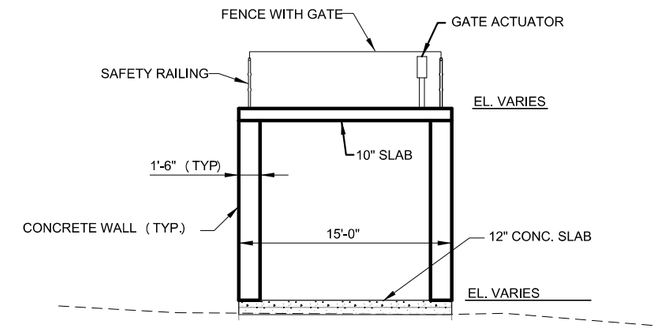

A C-513 SECTION
SCALE: 3/16"=1'-0"

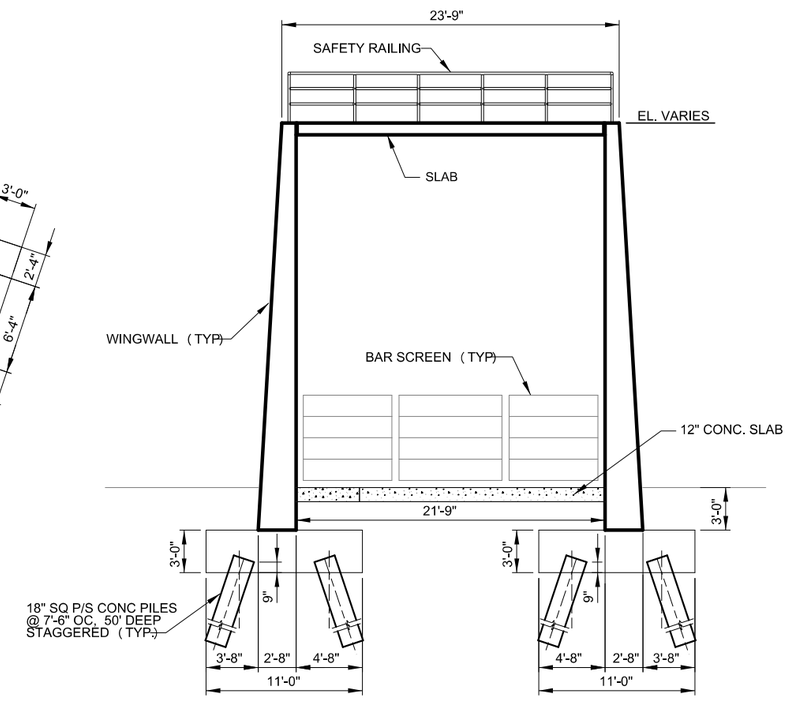

B C-513 LONGITUDINAL SECTION
SCALE: 3/16"=1'-0"

0 4' 8' 12'
SCALE:3/16"=1'

FINAL JUNE 2016
NOT FOR CONSTRUCTION

US Army Corps of Engineers®

MARK	DESCRIPTION	DATE	APPR.
2	INCORPORATES SPONSOR AND STAKEHOLDER COMMENTS	3/21/2016	MAP
1	REVISIONS FOR AJR COMMENTS	1/9/2015	MAP

DESIGNED BY: MAP
DWN BY: CSG
CKD BY: MAP
SUBMITTED BY:
PLOT SCALE: AS NOTED
PLOT DATE:
SIZE: ANSI D
FILE NAME: 698705C-513.dgn
DATE: 2016/03/11
SOLICITATION NO.:
CONTRACT NO.:
FILE NUMBER:

U.S. ARMY CORPS OF ENGINEERS
U.S. ARMY ENGINEER DISTRICT
NEW YORK
http://www.nan.usace.army.mil

MOFFATT & NICHOL
529 5th Avenue, 14th Floor
New York, New York 10017
212-768-7454

COASTAL STORM RISK MANAGEMENT
FEASIBILITY STUDY FOR THE
SOUTH SHORE OF STATEN ISLAND

TIDE GATE STRUCTURE DETAILS

SHEET IDENTIFICATION
C-513
SHEET OF

PATH: Q:\TA\6987-05\cadd_Active_Preliminary\
FILE: 698705C-513.dgn
6/2/2016 3:14:09 PM
LAST PLOTTED BY: arsmith

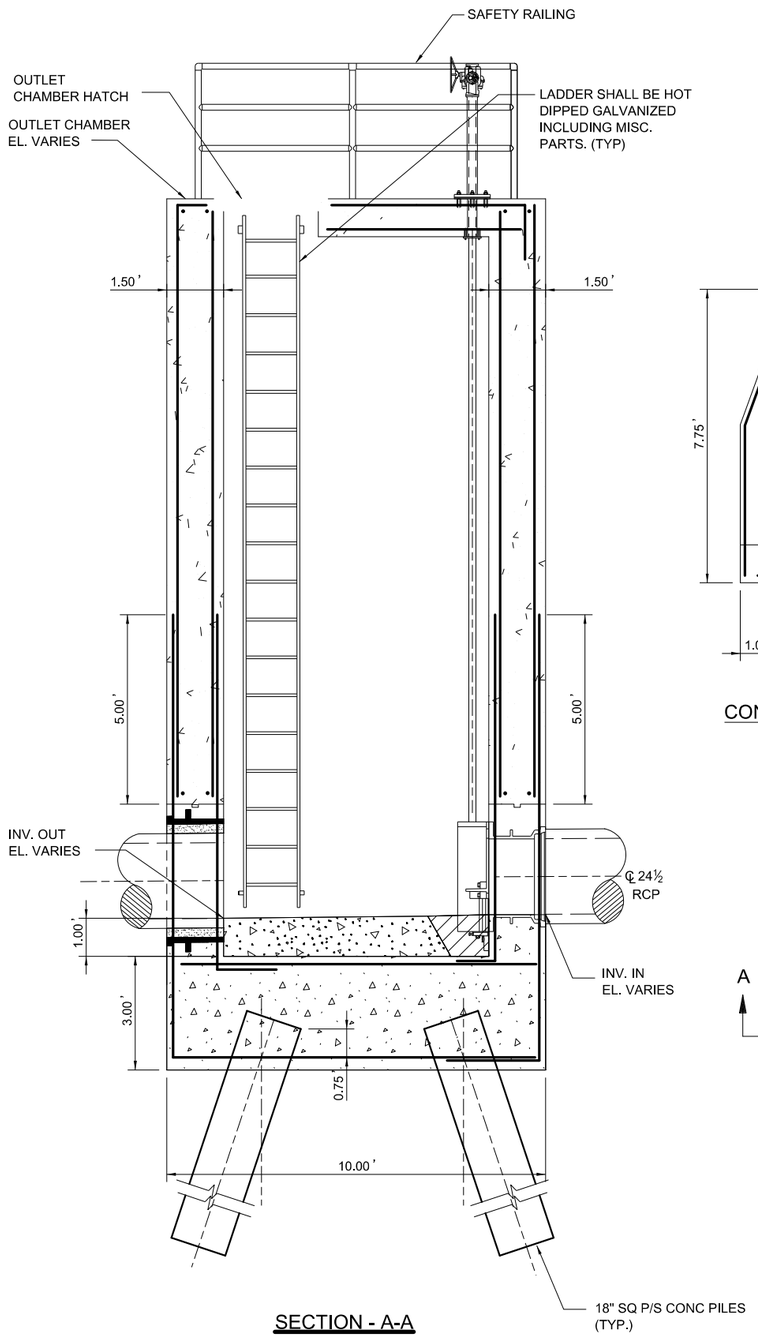

SECTION - A-A

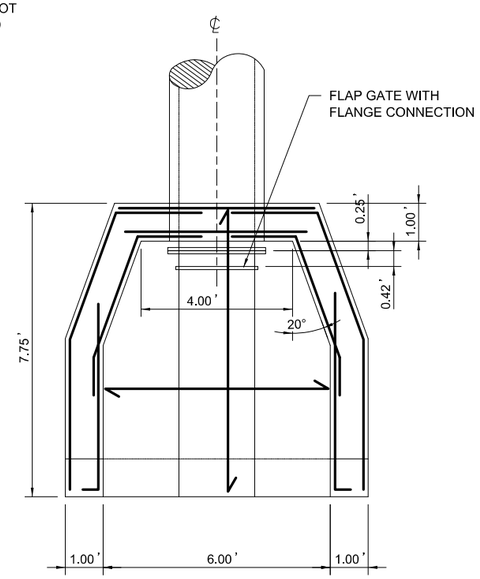

CONCRETE HEADWALL AND APRON

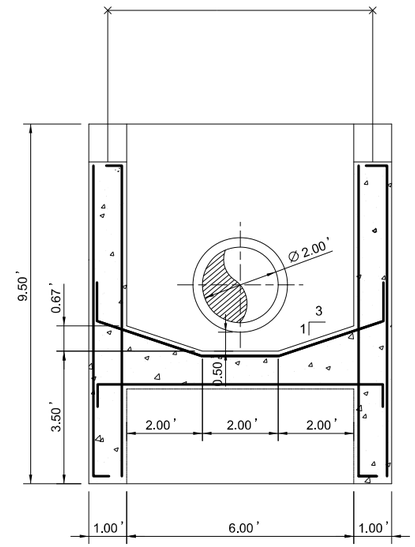

OUTLET END

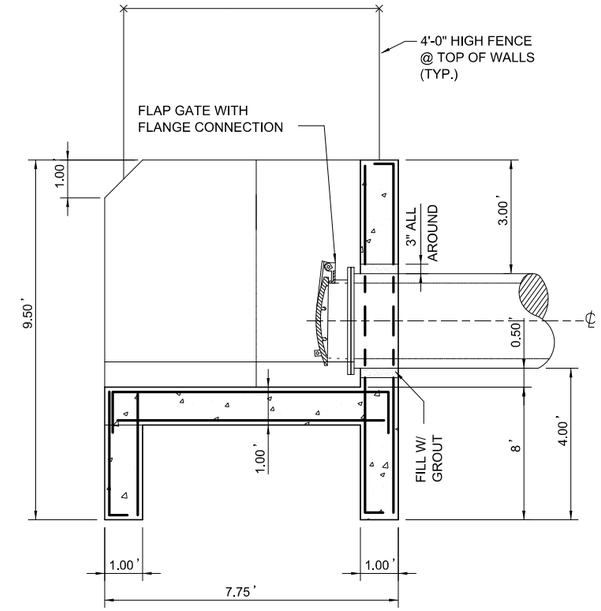

END VIEW OF OUTLET END

HEADWALL DETAIL FOR 24"Ø PIPE (TYP.)

SCALE : 1/2" = 1'-0"

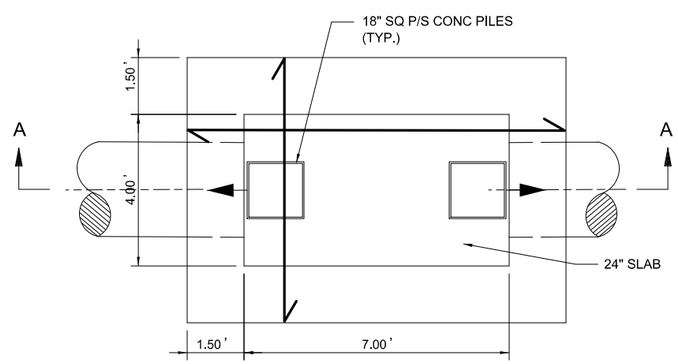

LOWER PLAN

NOTE:
ALL REBARS ARE #6@6" O.C. TOP AND BOTTOM, AND EACH FACE

A
C-514

SANITARY/ DRAINAGE STRUCTURE

FINAL JUNE 2016
NOT FOR CONSTRUCTION

0 1' 2' 4'
SCALE:1/2"=1'-0"

US Army Corps of Engineers®

MARK	DESCRIPTION	DATE	APPR.
2	INCORPORATES SPONSOR AND STAKEHOLDER COMMENTS	3/21/2016	MAP
1	REVISIONS FOR AJR COMMENTS	1/9/2015	MAP

DESIGNED BY: MAP
DWN BY: CSG
CKD BY: MAP
SUBMITTED BY:
PLOT SCALE: 1:1
PLOT DATE: 6/2/2016
DATE: 2016/03/11
SOLICITATION NO.:
CONTRACT NO.:
FILE NUMBER:
SIZE: ANSI D
FILE NAME: 698705C-514.dgn

U.S. ARMY CORPS OF ENGINEERS
U.S. ARMY ENGINEER DISTRICT
NEW YORK
http://www.nan.usace.army.mil

MOFFATT & NICHOL
529 5th Avenue, 14th Floor
New York, New York 10017
212-768-7454

COASTAL STORM RISK MANAGEMENT
FEASIBILITY STUDY FOR THE
SOUTH SHORE OF STATEN ISLAND

CONCRETE HEADWALL DETAILS

SHEET IDENTIFICATION
C-514
SHEET OF

PATH: Q:\TA\6987-05\cadd_Active_Preliminary\
FILE: 698705C-514.dgn
6/2/2016 3:14:12 PM
LAST PLOTTED BY: arsmith

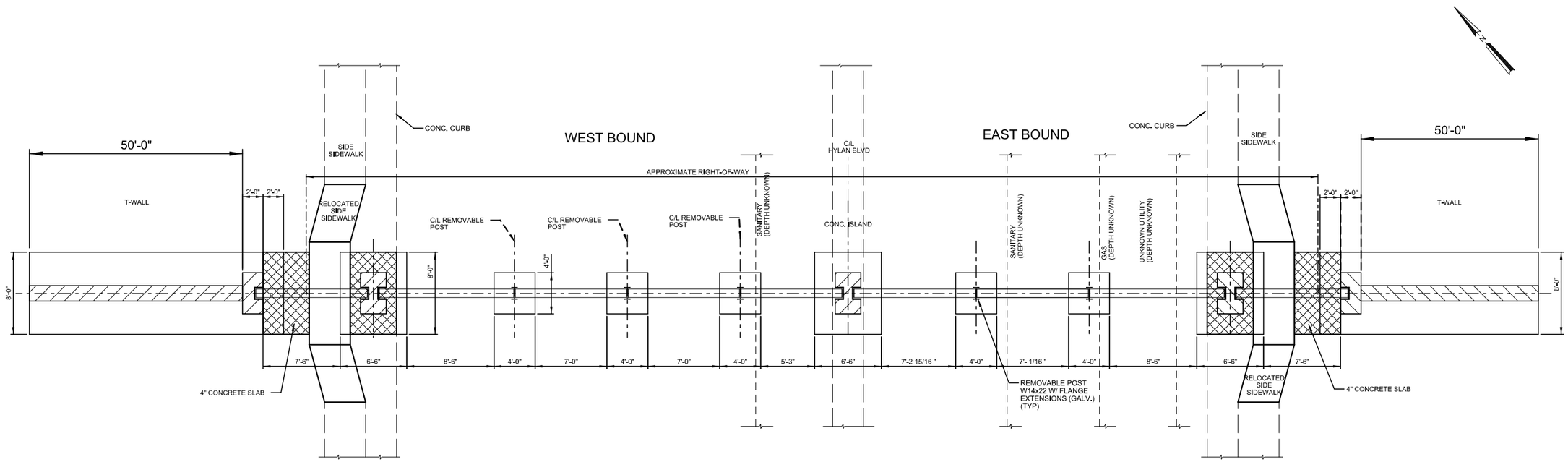

B C-515 PLAN VIEW
SCALE: 3/16"=1'-0"

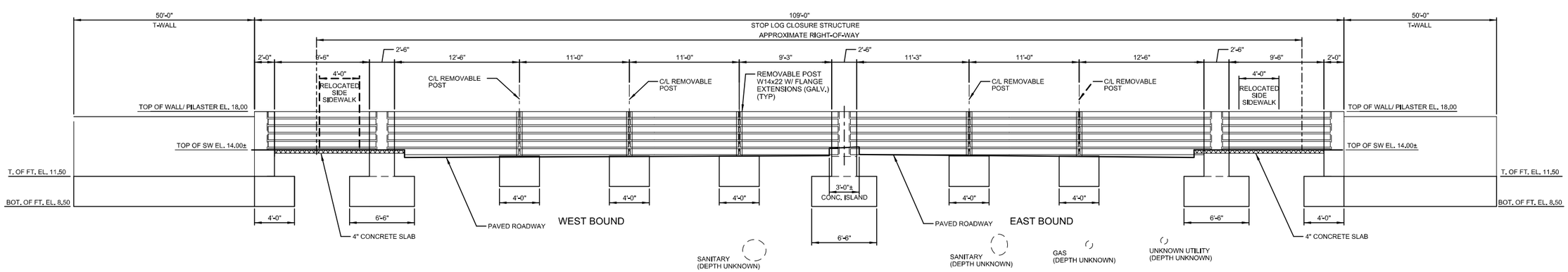

A C-515 ELEVATION - FLOODWALL/BULKHEAD CLOSURE STRUCTURE - (ELEVATIONS ALONG C/L WALL)
SCALE: 3/16"=1'-0"

FINAL JUNE 2016
NOT FOR CONSTRUCTION

0 4' 8' 12'
SCALE:3/16"=1'

US Army Corps of Engineers®

MARK	REVISIONS FOR AJR COMMENTS	DATE	APPR.
2	INCORPORATES SPONSOR AND STAKEHOLDER COMMENTS	3/21/2016	MAP
1		1/9/2015	MAP

DESIGNED BY: MAP
DWN BY: O.M.
CKD BY: MAP
SUBMITTED BY: M.C.
SIZE: ANSI D
FILE NAME: 698705C-515.dgn
PLOT SCALE: 1:1
PLOT DATE: 6/2/2016
DATE: 2016/03/11
SOLICITATION NO.:
CONTRACT NO.:
FILE NUMBER:

U.S. ARMY CORPS OF ENGINEERS
U.S. ARMY ENGINEER DISTRICT
NEW YORK
http://www.nan.usace.army.mil
MOFFATT & NICHOL
529 5th Avenue, 14th Floor
New York, New York 10017
212-768-7454

COASTAL STORM RISK MANAGEMENT
FEASIBILITY STUDY FOR THE
SOUTH SHORE OF STATEN ISLAND

CLOSURE STRUCTURE
PLAN AND ELEVATION

SHEET IDENTIFICATION
C-515
SHEET OF

PATH: Q:\TA\6987-05\cadd_Active_Preliminary\
FILE: 698705C-515.dgn
6/2/2016 3:14:13 PM
LAST PLOTTED BY: arsmith

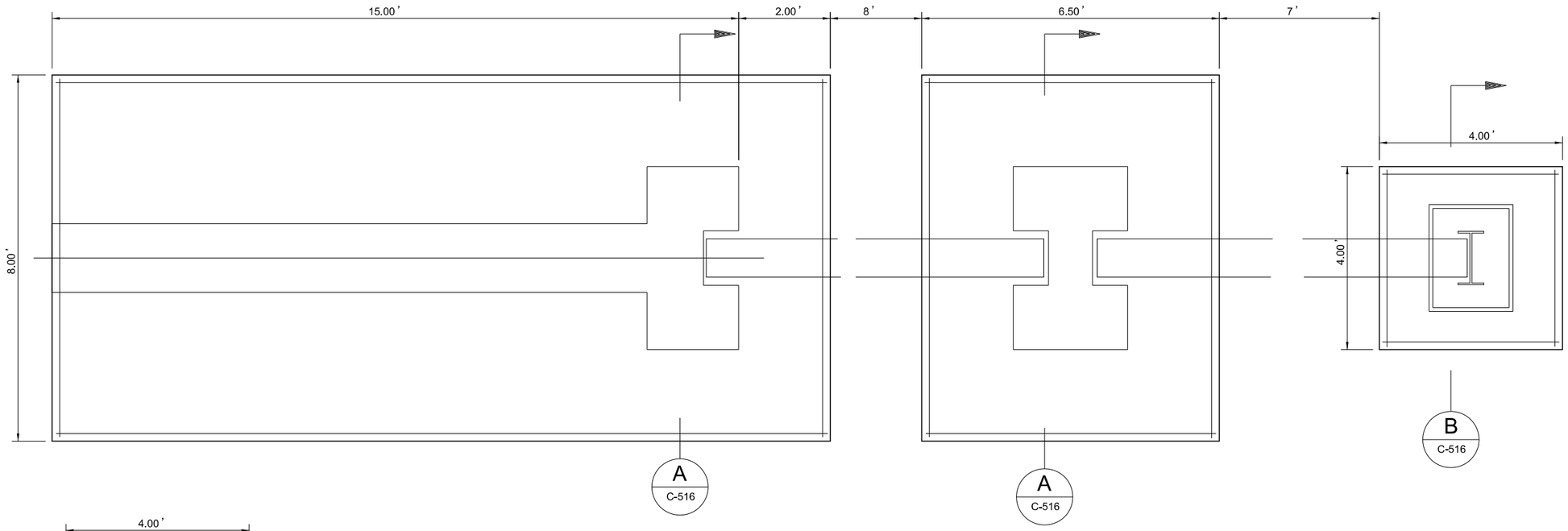

D C-516 PLAN
SCALE: 3/4"=1'-0"

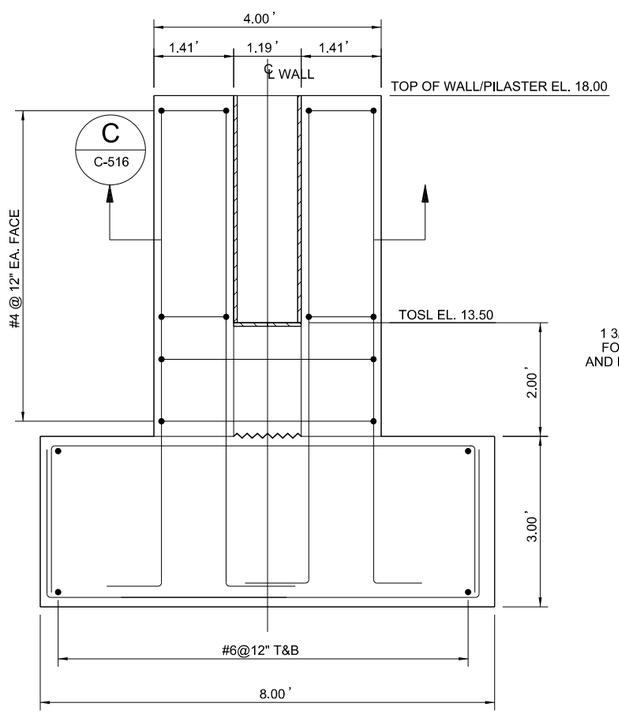

A C-516 SECTION
SCALE: 3/4"=1'-0"

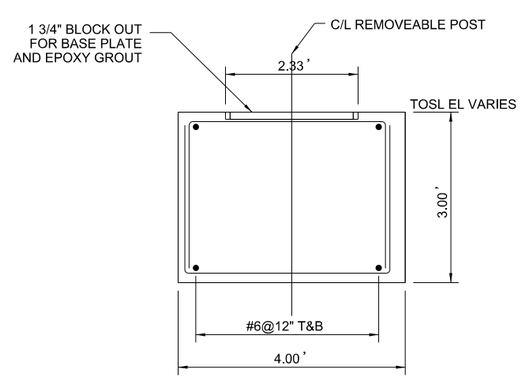

B C-516 SECTION
SCALE: 3/4"=1'-0"

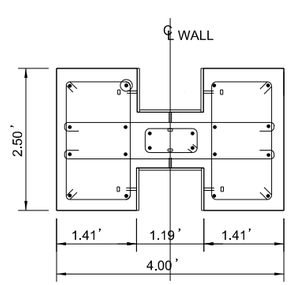

PLAN VIEW

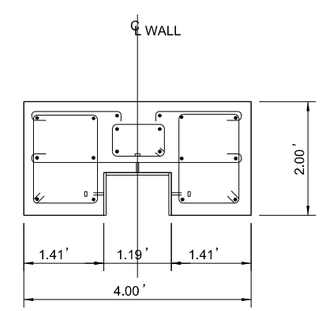

PLAN VIEW

C C-516 SECTION
SCALE: 3/4"=1'-0"

FINAL JUNE 2016
NOT FOR CONSTRUCTION

2' 0 1' 2'
SCALE:3/4"=1'

US Army Corps of Engineers®

MARK	DESCRIPTION	DATE	APPR.
2	INCORPORATES SPONSOR AND STAKEHOLDER COMMENTS	3/21/2016	MAP
1	REVISIONS FOR AJR COMMENTS	1/9/2015	MAP

U.S. ARMY CORPS OF ENGINEERS
U.S. ARMY ENGINEER DISTRICT
NEW YORK
http://www.nan.usace.army.mil

MOFFATT & NICHOL
529 5th Avenue, 14th Floor
New York, New York 10017
212-768-7454

DESIGNED BY: MAP
DWN BY: O.M.
CKD BY: MAP
SUBMITTED BY: M.C.
PLOT SCALE: 1:1/96DPI
PLOT DATE: 6/2/2016
SIZE: ANSI D
FILE NAME: 698705C-516.dgn
DATE: 2016/03/11
SOLICITATION NO.:
CONTRACT NO.:
FILE NUMBER:

COASTAL STORM RISK MANAGEMENT
FEASIBILITY STUDY FOR THE
SOUTH SHORE OF STATEN ISLAND

CLOSURE STRUCTURE DETAILS

SHEET IDENTIFICATION
C-516
SHEET OF

PATH: Q:\TA\6987-05\cadd_Active_Preliminary\
FILE: 698705C-516.dgn
6/2/2016 3:14:13 PM
LAST PLOTTED BY: arsmith